AP10N65F/P/T-B

650V N-Channel Enhancement Mode MOSFET

Description

The AP10N65F/P/T-B is silicon N-channel Enhanced VDMOSFETs, is obtained by the self-aligned planar Technology which reduce the conduction loss, improve switching performance and enhance the avalanche energy. The transistor can be used in various power switching circuit for system miniaturization and higher efficiency.

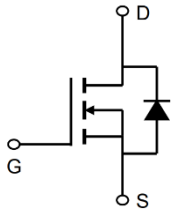

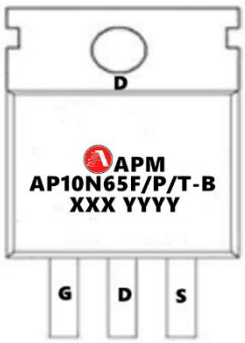

General Features

V_{DS} = 650V I_D =10A

$R_{DS(ON)}$ < 0.92Ω @ V_{GS}=10V （**Type：0.82Ω**）

Application

Uninterruptible Power Supply(UPS)

Power Factor Correction (PFC)

TO220F-3L

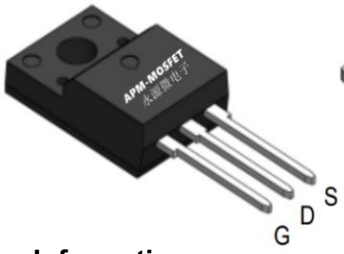

TO220-3L

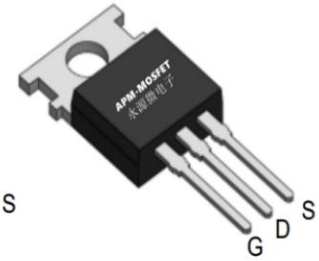

TO263-3L

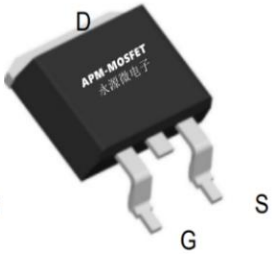

Package Marking and Ordering Information

Product ID	Pack	Marking	Qty(PCS)
AP10N65F-B	TO220F-3L	AP10N65F-B XXX YYYY	1000
AP10N65P-B	TO220-3L	AP10N65P-B XXX YYYY	1000
AP10N65T-B	TO263-3L	AP10N65T-B XXX YYYY	800

Absolute Maximum Ratings (T_C=25℃unless otherwise noted)

Symbol	Parameter	Value	Unit
VDSS	Drain-Source Voltage (V_{GS} = 0V)	650	V
I_D@T_C=25℃	Continuous Drain Current, V_{GS} @ 10V	10	A
I_D@T_C=100℃	Continuous Drain Current, V_{GS} @ 10V	6.0	A
IDM	Pulsed Drain Current (note1)	40	A
VGS	Gate-Source Voltage	±30	V
EAS	Single Pulse Avalanche Energy	405	mJ
IAS	Avalanche Current	9	A
P_D	Power Dissipation (T_C = 25ºC)	29	W
TJ, Tstg	Operating Junction and Storage Temperature Range	-55~+150	ºC
RthJC	Thermal Resistance, Junction-to-Case	4.3	ºC/W
RthJA	Thermal Resistance, Junction-to-Ambient	62.5	ºC/W

Electrical Characteristics (T_J=25℃, unless otherwise noted)

Symbol	Parameter	Conditions	Min.	Typ.	Max.	Unit
V(BR)DSS	Drain-Source Breakdown Voltage	ID = 250μA, VGS = 0V	650	-	-	V
IDSS	Zero Gate Voltage Drain Current	VDS = 650V, VGS = 0V	-	-	1.0	μA
IGSS	Gate-Body Leakage Current	VDS = 0V, VGS = ±30V	-	-	±100	nA
VGS(th)	Gate Threshold Voltage	VDS = VGS, ID = 250μA	2.0	3.0	4.0	V
RDS(ON)	Static Drain-Source ON-Resistance(4)	VGS = 10V, ID = 2A	-	0.82	0.92	Ω
Ciss	Input Capacitance	VGS=0V, VDS=25V, f= MHz	-	1560	-	pF
Coss	Output Capacitance		-	136	-	pF
Crss	Reverse Transfer Capacitance		-	19	-	pF
Qg	Total Gate Charge	VGS= 0 to 10V VDS=520V, ID = 10A	-	37	-	nC
Qgs	Gate Source Charge		-	8	-	nC
Qgd	Gate Drain("Miller") Charge		-	15	-	nC
td(on)	Turn-On DelayTime	VGS=10V, VDD = 320V ID=10A, RGEN = 24Ω	-	23	-	ns
tr	Turn-On Rise Time		-	37	-	ns
td(off)	Turn-Off DelayTime		-	104	-	ns
tf	Turn-Off Fall Time		-	45	-	ns
IS	Maximum Continuous Drain to Source Diode Forward Current		-	-	10	A
ISM	Maximum Pulsed Drain to Source Diode Forward Current		-	-	40	A
VSD	Drain to Source Diode Forward Voltage	VGS=0V, IS=10A	-	-	1.2	V
trr	Body Diode Reverse Recovery Time	IF=10A, di/dt=100A/us	-	423	-	ns
Qrr	Body Diode Reverse Recovery Charge		-	4.4	-	μC

Note :

1、The data tested by surface mounted on a 1 inch2 FR-4 board with 2OZ copper.

2、The EAS data shows Max. rating . VDD =50V, VG =10V, ,L=10mH, IAS =9A, Starting TJ=25 ºC

3、The test condition is Pulse Test: Pulse width ≤ 300μs, Duty Cycle ≤ 1%

4、The power dissipation is limited by 150℃ junction temperature

5、The data is theoretically the same as ID and IDM , in real applications , should be limited by total power dissipation.

Typical Characteristics

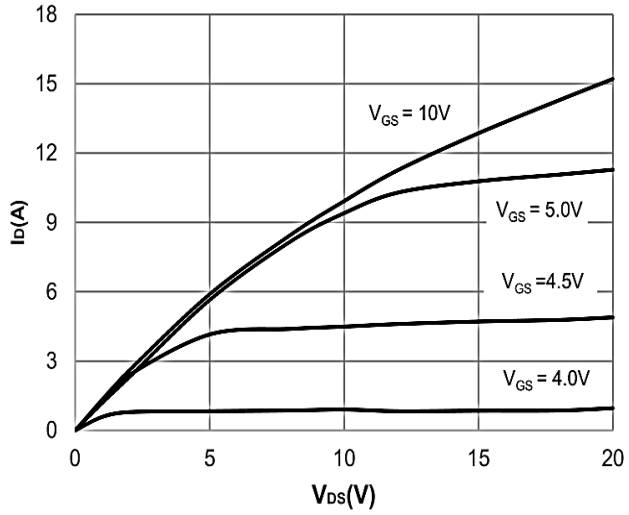

Figure1: Output Characteristics

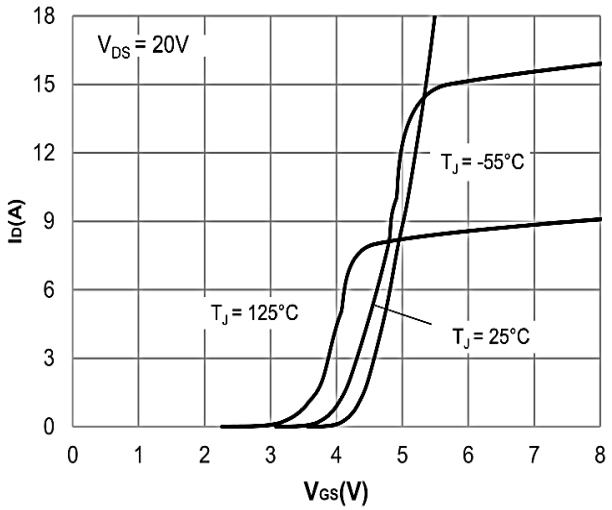

Figure 2: Typical Transfer Characteristics

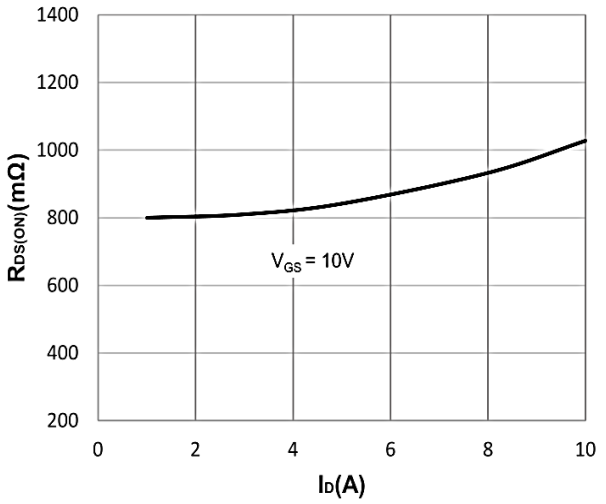

Figure 3:On-resistance vs. Drain Current

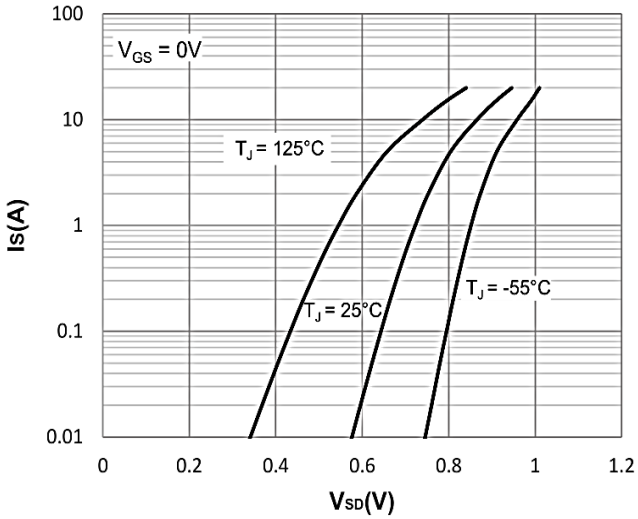

Figure 4: Body Diode Characteristics

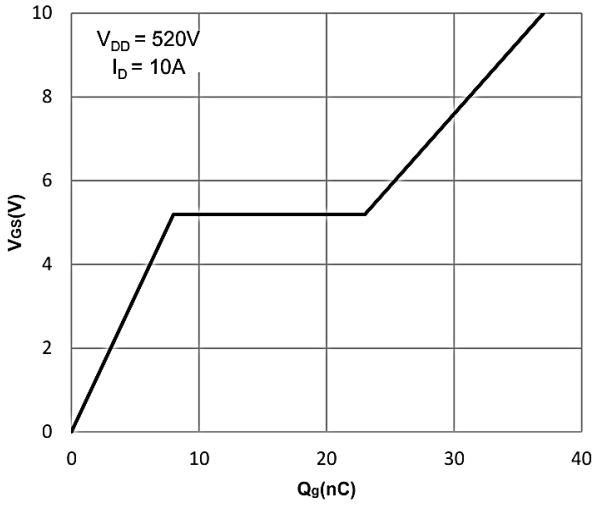

Figure 5: Gate Charge Characteristics

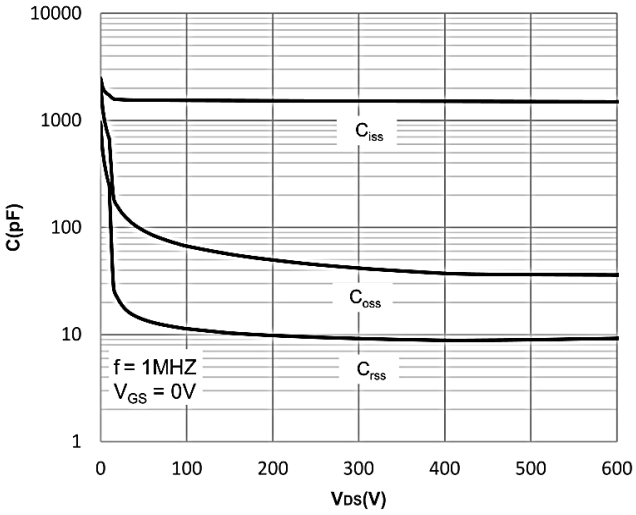

Figure 6: Capacitance Characteristics

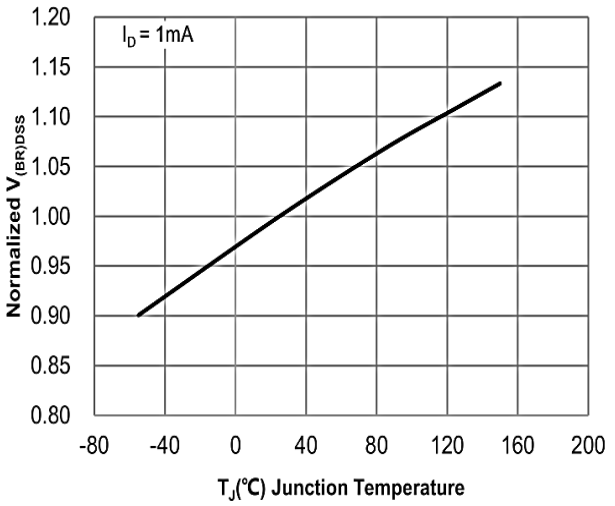

Figure 7: Normalized Breakdown Voltage vs. Junction Temperature

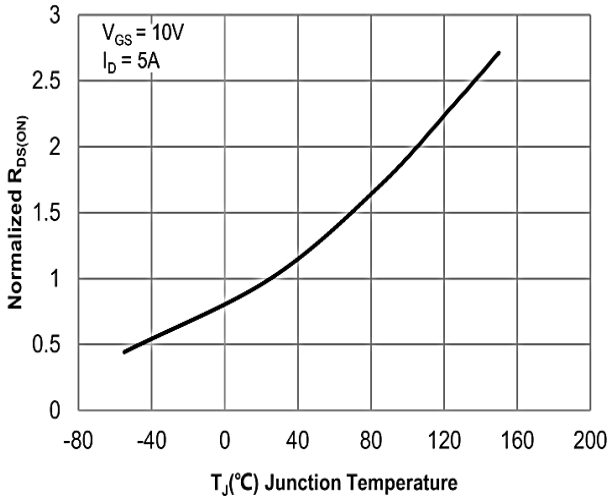

Figure 8: Normalized on Resistance vs. Junction Temperature

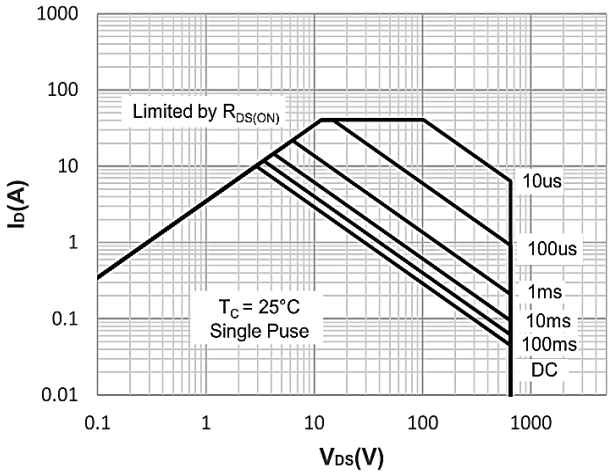

Figure 9: Maximum Safe Operating Area

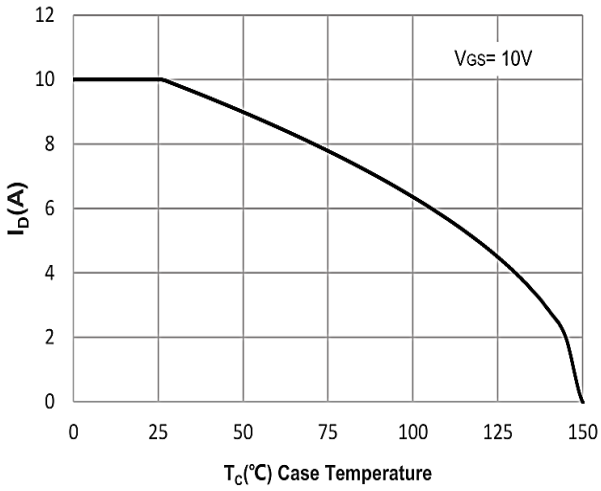

Figure 10: Maximum Continuous Drain Current vs. Ambient Temperature

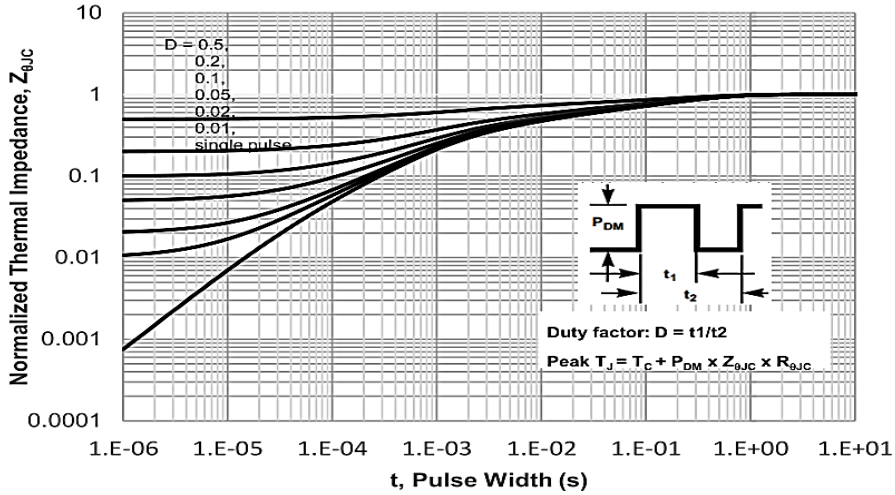

Figure.11: Maximum Effective Transient Thermal Impedance, Junction-to-Ambient

Package Mechanical Data-TO220F-3L

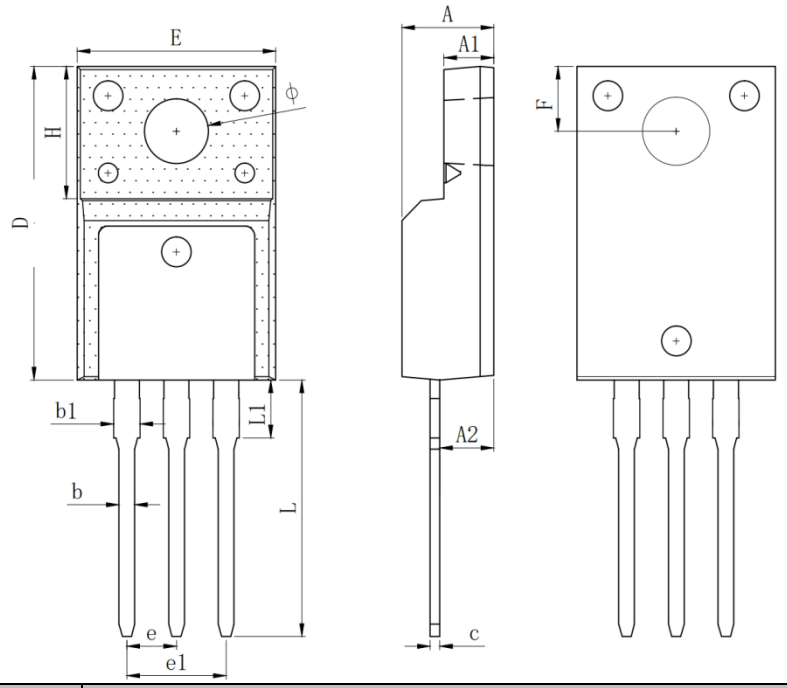

Symbol	Dimensions In Millimeters		
	min.	typ.	max.
A	4.50	4.70	5.00
A1	2.34	2.54	2.84
A2	2.40	2.90	3.40
b	0.70	0.80	0.95
b1	1.05	1.35	1.55
c	0.40	0.50	0.65
D	15.57	15.87	16.17
H	6.70REF		
E	9.86	10.16	10.46
e	2.54BSC		
e1	5.08BSC		
L	12.65	12.98	13.30
L1	2.78	3.08	3.38
F	3.15	3.30	3.55
ϕ	3.00	3.30	3.65

Package Mechanical Data-TO220-3L

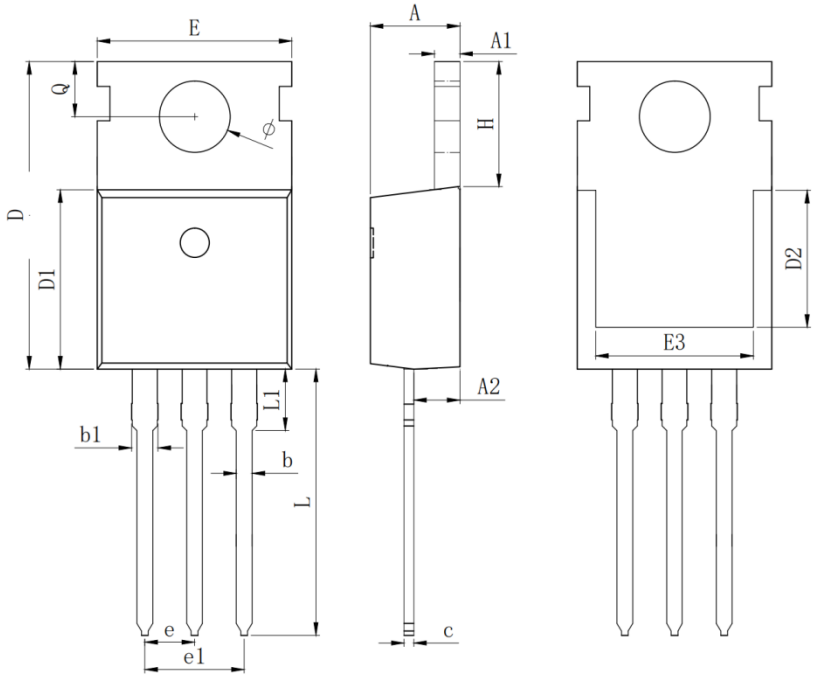

Symbol	Dimensions In Millimeters		
	min.	typ.	max.
A	4.25	4.50	4.70
A1	1.15	1.30	1.45
A2	2.15	2.35	2.55
b	0.65	0.80	0.95
b1	1.15	1.35	1.55
c	0.35	0.50	0.65
D	14.30	15.30	16.30
D1	8.80	9.10	9.40
D2	6.3REF		
E	9.70	10.00	10.30
E3	7.00	8.00	9.0
e	2.54BSC		
e1	5.08BSC		
L	12.70	13.50	13.90
L1	2.60	3.10	3.40
H	6.00	6.50	6.85
Q	2.60	2.80	3.00
ϕ	3.40	3.60	3.80

Package Mechanical Data-TO263-3L

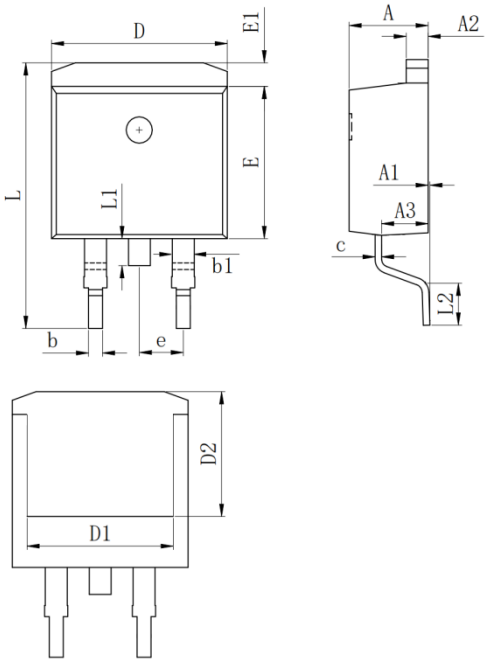

Symbol	Dimensions In Millimeters		
	min.	typ.	max.
A	4.37	4.57	4.77
A1	0.00		0.25
A2	1.22	1.27	1.42
A3	2.49	2.69	2.89
b	0.70	0.81	0.96
b1	1.17	1.27	1.47
c	0.30	0.38	0.53
D	9.86	10.16	10.40
D1	8.4REF		
D2	7.073REF		
E	8.50	8.70	9.30
E1	0.87	1.17	1.47
e	2.54BSC		
L	14.70	15.10	15.50
L1	1.40	1.55	1.70
L2	2.00	2.30	2.60

Attention

1,Any and all APM Microelectronics products described or contained herein do not have specifications that can handle applications that require extremely high levels of reliability, such as life support systems, aircraft's control systems, or other applications whose failure can be reasonably expected to result in serious physical and/or material damage. Consult with your APM Microelectronics representative nearest you before using any APM Microelectronics products described or contained herein in such applications.

2,APM Microelectronics assumes no responsibility for equipment failures that result from using products at values that exceed, even momentarily, rated values (such as maximum ratings, operating condition ranges, or other parameters) listed in products specifications of any and all APM Microelectronics products described or contained herein.

3, Specifications of any and all APM Microelectronics products described or contained here instipulate the performance, characteristics, and functions of the described products in the independent state, and are not guarantees of the performance, characteristics, and functions of the described products as mounted in the customer's products or equipment. To verify symptoms and states that cannot be evaluated in an independent device, the customer should always evaluate and test devices mounted in the customer's products or equipment.

4, APM Microelectronics Semiconductor CO., LTD. strives to supply high quality high reliability products. However, any and all semiconductor products fail with some probability. It is possible that these probabilistic failures could give rise to accidents or events that could endanger human lives that could give rise to smoke or fire, or that could cause damage to other property. When designing equipment, adopt safety measures so that these kinds of accidents or events cannot occur. Such measures include but are not limited to protective circuits and error prevention circuits for safe design, redundant design,and structural design.

5,In the event that any or all APM Microelectronics products(including technical data, services) described or contained herein are controlled under any of applicable local export control laws and regulations, such products must not be exported without obtaining the export license from the authorities concerned in accordance with the above law.

6, No part of this publication may be reproduced or transmitted in any form or by any means,electronic or mechanical, including photocopying and recording, or any information storage or retrieval system, or otherwise, without the prior written permission of APM Microelectronics Semiconductor CO., LTD.

7, Information (including circuit diagrams and circuit parameters) herein is for example only; it is not guaranteed for volume production. APM Microelectronics believes information herein is accurate and reliable, but no guarantees are made or implied regarding its use or any infringements of intellectual property rights or other rights of third parties.

8, Any and all information described or contained herein are subject to change without notice due to product/technology improvement,etc. When designing equipment, refer to the "Delivery Specification" for the APM Microelectronics product that you Intend to use.

Edition	Date	Change
REV1.0	2024/1/31	Initial release

Copyright Attribution "APM-Microelectronics"