艾华集团 AIHUA GROUP | AiSHi
湖南艾华集团股份有限公司
HUNAN AIHUA GROUP CO.,LTD.
T : +86-737-6184466 F :+86-737-6180493 www.aihuaglobal.com

CUSTOMER:
DATE: April 23,2022

SPECIFICATION

DESCRIPTION: Aluminium Electrolytic Capacitors

AISHI P/N: ERS1HM471G20OT

SERIES: RS

ITEM: 50 V 470 μF (Φ 10 × 20)

CUSTOMER P/N:

No.: CRS-ZD-2204235

APPROVED BY
Please Return One Copy with Your Approval 承认后请寄回一份

PREPARED BY	CHECKED BY	APPROVED BY
蔡娟 技術中心	李 凯 技術中心	黄遠彬 技術中心

变更记录 Change Records

编号 No.	更改原因 Explanation of changes	更改内容 Content	修订人 Reviser	生效日期 Effective date
CRS-ZD-2204235	新建 New	新建 New	蔡娟	2022-04-23

CUSTOMER		SERIES	RS	DATE	2022-04-23

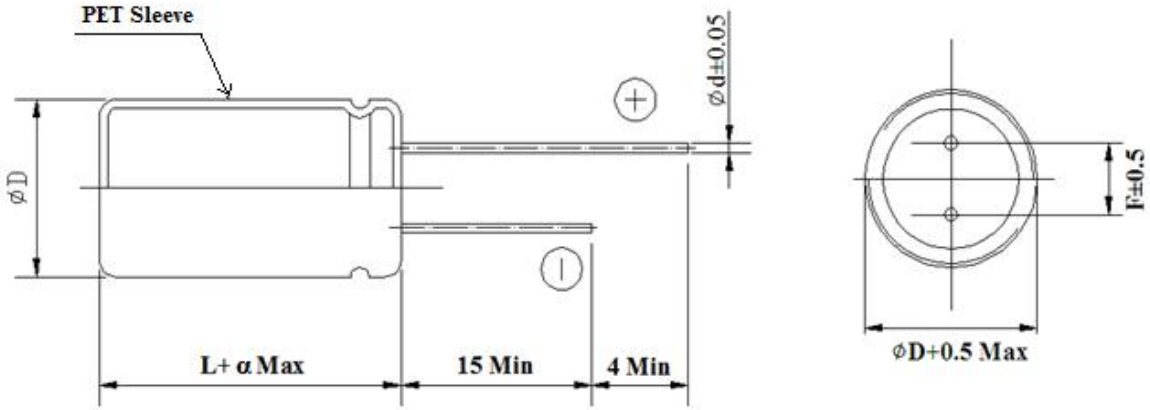

FIG-1

TABLE-1

No.	Customer Part No.	Aishi Part No.	Capacitance (μF)	Tolerance on Rated Capacitance (%)	Rated Voltage (Vdc)	Surge Voltage (Vdc)	Operating Temp. Range (℃)	Tanδ (120Hz) (Max)	Leakage Current (μA)(2min.)	Max Ripple Current (mArms) at105℃ 100kHz	Impedance (Ω)Max at 20℃ 100kHz	Endurance at 105℃ (Hours)	Dimensions (mm)					Appearance Drawing No.
													ΦD	L	α	d	F	
1		ERS1HM471G20OT	470	-20,+20	50	63	-40~+105	0.10	235.0	1660	0.045	7000	10	20	2	0.6	5.0	FIG-1

1 概述 SCOPE

本承认书规定了RS系列径向引线引出铝电解电容器的技术规范，本技术规范条文解释权归本公司所有。

This specification covers“RS series” miniature single-ended aluminium electrolytic capacitors，AISHI reserves the right of final interpretation for this technical specification.

2 参考标准 APPLICABLE SPECIFICATION

本承认书参考IEC 60384-1、IEC 60384-4、GB/T 2693和GB/T 5993制定。

This specification consulted the institute of IEC 60384-1,IEC 60384-4,GB/T 2693 and GB/T 5993.

3 工作温度范围 OPERATING TEMPERATURE RANGE

工作温度范围是电容器在施加额定工作电压条件下，可以长期可靠工作的环境温度范围。

Operating temperature range is the range of ambient temperature at which the capacitor can be operated continuously at rated voltage.

-40℃~+105℃ 6.3V.DC~120V.DC

4 测试环境 CONDITION OF TEST

如果没有其他规定，标准的测试、检验环境条件如下所示：
环境温度：15℃~35℃
相对湿度：45%~75%
大气压力：86kPa~106kPa

如果对测试结果有异议，可以在以下条件测试:
环境温度：20±1℃
相对湿度：60%~67%
大气压力：86kPa~106kPa

Unless otherwise specified, the standard range of atmospheric conditions for making measurements and tests are as follows:

Ambient temperature ：15℃ to 35℃
Relative humidity ：45% to 75%
Air pressure：86kPa to 106kPa

If there may be doubt on the results, measurements shall be made within the following limits:
Ambient temperature：20±1℃
Relative humidity ：60% to 67%
Air pressure：86kPa to 106kPa

5 产品特性 PRODUCT CHARACTERISTICS

5.1电气特性 Electrical Characteristics

序号 No.	项目 Item	测试方法 Test method	性能 Performance
5.1.1	额定工作电压 Rated voltage	电压：直流电压值+交流电压峰值≤额定电压 Voltage: DC voltage + peak ripple voltage ≤Rated voltage	见表1 See TABLE-1
5.1.2	电容量 Capacitance	测试频率：120Hz(±20%) 测试电路：串联等效 测试电压：0.5Vrms以下+1.5~ 2.0VDC Measuring frequency: 120Hz±20% Measuring circuit: Series equivalent circuit Measuring voltage: 0.5Vrms or less +1.5 to 2.0 VDC	容量偏差： -20%～+20% Capacitance tolerance: -20%～+20%
5.1.3	损失角正切值 Dissipation factor	测试条件与5.1.2电容量测试相同。 Testing conditions are the same as 5.1.2 for capacitance.	DF见表1 DF: See TABLE-1
5.1.4	漏电流 Leakage current	在电容器两端施加额定工作电压，并串联1000±100Ω电阻，在施加规定时间电压后，测量漏电流。 测试电路如下图： The rated voltage shall be applied across the capacitor and its protective resistor shall be 1000±100Ω. The leakage current shall then be measured after an electrification period of schedule time.Measurement circuit: 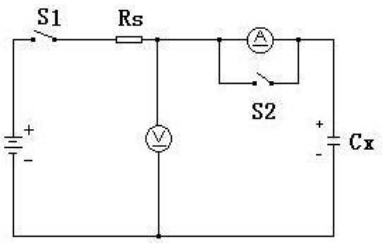 Rs: Protective resistor(1000±100Ω) DC ammeter DC voltmeter S1: Switch S2: Protective switch for an ammeter	6.3V~120V: I≤0.01CV或3μA， 取较大值（2分钟后） 6.3V~120V: I≤0.01CV or 3μA Whichever is greater（after 2 min） I：漏电流（μA） C：容量（μF） V：额定工作电压（V） I：Leakage current(μA) C：Capacitance(μF) V：Rated voltage (V)

<table>
<tr><td rowspan="2">5.1.5</td><td rowspan="2">温度特性
Temperature characteristic</td><td>
<table>
<tr><th>阶段</th><th>温度</th><th>时间</th></tr>
<tr><td>1</td><td>20±2℃</td><td>--</td></tr>
<tr><td>2</td><td>-25, -40 $^{+0}_{-3}$℃</td><td>2h</td></tr>
<tr><td>3</td><td>20±2℃</td><td>15min.</td></tr>
<tr><td>4</td><td>105 $^{+3}_{-0}$℃</td><td>2h</td></tr>
</table>
阶段1：测量容量和阻抗（|z| 20℃ 120Hz±20%）；
阶段2：电容器恒温贮存2小时，在热平衡状态测阻抗（|z|- 25, -40℃ 120Hz±20%）；
阶段4：电容器恒温贮存2小时，在热平衡状态测电容量。
Step 1: Capacitance and impedance shall be measured. (|z| 20℃ 120Hz±20%);
Step 2: After the capacitor being stored for 2 hours,impedance shall be measured at thermal stability. (|z|-25，-40℃ 120Hz±20%);
Step 4:After the capacitor being stored for 105℃2 hours, capacitance shall be measured. The measurement shall be made at thermal stability.
</td><td>阶段2：
阻抗值与阶段1阻抗值相比，不大于表2要求；
阶段4：
容量变化应在初值的±20%范围内。
Step 2:
Impedance value ratio to the value at step 1 shall be not more than the value given in TABLE-2.
Step 4:
Variation of capacitance Within ±20% of the initial value.</td></tr>
<tr><td rowspan="2">5.1.6</td><td rowspan="2">耐浪涌电压
Surge test</td><td>施加表1所列浪涌电压，充电30±5秒，放电5.5±0.5分钟作为一个周期，共进行1000次。
测试温度：15℃-35℃
然后在标准大气条件下放置达到热稳定，测试各参数
Application of DC surge Voltage stated at TABLE-1. 1000 times of charging for 30±5 sec., discharging with a period of 5.5±0.5 min..
Test temperature: 15℃-35℃
And the capacitor shall be stored under standard atmospheric conditions to obtain thermal stability, after which measurements shall be made.</td><td>容量变化：在初始值的±20%以内。损耗角正切值不大于表1规定值的200%。
漏电流：满足5.1.4要求。
Capacitance change:Within±20% of the initial value Dissipation factor:
Not more than 200% of the specified value in TABLE-1.
Leakage current:
To satisfy No. 5.1.4 .</td></tr>
<tr><td colspan="2">Test circuit
 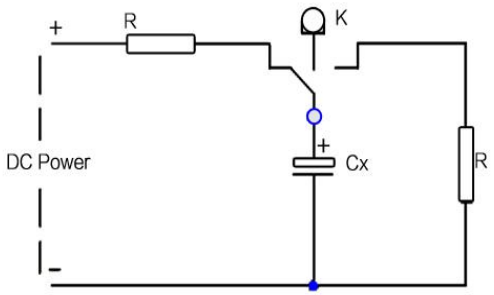

Note: This requirement is applicable only to instantaneous over voltage which may be applied to terminals of capacitor, therefore, not applicable to such over voltages as often applied.</td></tr>
</table>

5.2 机械特性 Mechanical Performance

<table>
<tr><th>序号 No.</th><th>项目 Item</th><th>测试方法 Test method</th><th>特性 Performance</th></tr>
<tr><td rowspan="8">5.2.1</td><td rowspan="8">端子强度
Terminal strength</td><td colspan="6">端子抗拉强度：
沿电容器端子引线方向施加拉力(如下表)，10±1秒。</td><td rowspan="8">测量电容器应无接触不良、开路或短路，无可见机械损伤。
When the capacitor is measured, there shall be no intermittent contacts, or open or short-circuiting.
There shall be no visible mechanical damage.</td></tr>
<tr><td>引线直径Φ</td><td>0.45</td><td>0.5</td><td>0.6</td><td>0.8</td><td>1.0</td></tr>
<tr><td>拉力N</td><td colspan="2">5</td><td colspan="2">10</td><td>20</td></tr>
<tr><td colspan="6">端子抗弯强度：
在电容器引线施加固定重力（如下表），然后将电容体弯折90°后回到原位，再向相反方向弯折90°后回到原位。
上述过程在5秒内完成。</td></tr>
<tr><td>引线直径Φ</td><td>0.45</td><td>0.5</td><td>0.6</td><td>0.8</td><td>1.0</td></tr>
<tr><td>拉力N</td><td colspan="2">2.5</td><td colspan="2">5</td><td>10</td></tr>
<tr><td colspan="6">Tensile strength of terminal:
A static load （stated in the table above） shall be applied to the terminal in the axial direction and acting in a direction away from the body for 10±1 sec..
Bending strength of terminal:
Hang the specified dead weight （stated in the table above）, then bend the body through 90°, return to the original position.
Next bend it in opposite direction through 90° with the same speed, again return to the original position.
Complete this operation in about 5 sec..</td></tr>
<tr><td>5.2.2</td><td>振动试验
Resistance to vibration</td><td colspan="6">在3个互相垂直的方向分别施加2小时振动，共6小时。
频率：10-55Hz
振幅峰-峰值：1.5mm.
振速：1分钟内振速10～55～10Hz
Direction and duration of vibration:
3 orthogonal directions mutually each for 2h , Total 6h.
Vibration frequency range :10-55Hz.
Peak to peak amplitude: 1.5mm
Sweep rate :10 to 55 to 10Hz in about 1 min.</td><td>测量电容器应无接触不良开路或短路，无可见机械损伤。
When the capacitor is measured there shall be no intermittent contacts, or open or short circuiting。There shall be no visible mechanical damage.</td></tr>
<tr><td>5.2.3</td><td>可焊性
Solderability</td><td colspan="6">焊锡温度：235±5℃
浸入时间：2±0.5秒
Temperature of solder: 235±5℃
Dipping time: 2±0.5sec.
This specification shall be met after the capacitors are stored under standard atmospheric conditions for 6 months.</td><td>浸入焊锡的引线表面积约90%以上应附着新锡。
At least 90% of circumferential surface of the dipping portion of terminal shall be covered with new solder.</td></tr>
</table>

5.3 耐久性测试 Endurance Performance

序号 No.	项目 Item	测试方法 Test method	特性 Performance
5.3.1	耐焊接热 Resistance to soldering heat	焊槽法： 焊锡温度：260±5℃ 浸入时间：10±1秒 电 路 板 ：1.6mm Solder bath method Solder bath temperature : 260±5℃ Immersion time : 10±1sec. Printed wiring board: 1.6mm	容量变化：在初始值±10%范围内。 损失角正切值：不大于表1规定值。 漏电流：满足5.1.4要求。 外观：无异状。 Variation of capacitance: Within ±10% of the initial value. Dissipation factor: Not more than the specified value in TABLE-1. Leakage current: To satisfy No. 5.1.4 . Appearance: No remarkable abnormality.
5.3.2	稳态湿热 Resistance to damp heat (steady state)	试验温度：40±2℃ 试验时间：240±8h 相对湿度：90~95% 试验后，电容器在标准大气条件下1~2小时，然后测试参数。 Test temperature : 40±2℃ Test time : 240±8h Relative humidity: 90~95% After completion of test, the capacitor shall be subjected to standard atmospheric conditions for 1 to 2 hours, after which measurements shall be made.	容量变化：在初始值±10%范围内。 损失角正切值：不大于表1规定值。 漏电流：满足5.1.4要求。 外观：无异状。 Variation of capacitance: Within ±10% of the initial value. Dissipation factor: Not more than the specified value in TABLE-1. Leakage current: To satisfy No. 5.1.4 . Appearance: No remarkable abnormality.
5.3.3	高温负荷试验 Load life test	1. 试验温度：105±2℃,施加额定电压和额定纹波电流。 Application of the rated voltage and the rated ripple current, Test temperature:105±2℃. 2. 试验时间：参照TABLE-1寿命要求。 Testing time: refer to TABLE-1 life requirements.	容量变化：在初始值±20%范围内(6.3V,10V:≤±30%) 损耗角正切值：不超过规定值的200% 漏电流：不大于规定值 外观：无异状 Variation of capacitance: Within ±20% of the initial value.(6.3V,10V:≤±30%) Dissipation factor: Not more than 200% of the specified value Leakage current: Not more than the specified value Appearance: No remarkable abnormality.

5.3.4	高温贮存试验 Shelf life test	在105±2℃环境下无负荷贮存1000^{+48}_{-0} h，至少恢复16小时后。 The capacitors are stored without voltage load at 105±2℃ for 1000^{+48}_{-0} h and then resumed 16 hours.	容量变化：初始值±20%范围内。(6.3V,10V:≤±30%) 损耗角正切值：不超过规定值的200% 漏电流：不超过规定值的200% 外观：无异状 Variation of capacitance: Within ±20% of the value before test. (6.3V,10V:≤±30%) Dissipation factor: Not more than 200% of the specified value Leakage current: Not more than 200% of the specified value Appearance: No remarkable abnormality.
5.3.5	防爆试验 Safety vent	以下试验只适用于铝壳直径≥Φ8产品。 The following tests only apply to those products with vent products at diameter≥Φ8 with vent. 在电容器两极施加反向直流电压，其中通过的电流为1A，在测试时防爆装置应能在30分钟内动作。 DC Application test: The capacitor shall be subjected to a reverse DC voltage. The current flowing through the capacitor shall be 1A. If the vent does work with the voltage applied for 30 minutes, the test is considered to be passed.	上述过程中应无引线、铝箔等散射，无火花产生。 The safety vent is actuated under the test conditions, thereby preventing terminals, metal pieces, etc, of the capacitor from scattering due to burst, the case from separating from the seal packing, or the capacitor from producing flame.

※ TABLE-2：阻抗比 Max. Impedance Ratio

额定工作电压 Rated voltage (Vdc)	6.3	10	16	25	35	50	63	80	100	120
|z|-25℃/|z|20℃	4	3	2							3
|z|-40℃/|z|20℃	8	6	4	3						6

※ TABLE-3：纹波电流频率因子 RIPPLE CURRENT FREQUENCY COEFFICIENT

Freq.(Hz) / Cap.(μF)	120	1k	10k	100k
Cap.＜220	0.40	0.75	0.90	1.00
220≤Cap.＜680	0.50	0.85	0.94	1.00
680≤Cap.＜2200	0.60	0.87	0.95	1.00
2200≤Cap.＜4700	0.75	0.90	0.95	1.00
Cap.≥4700	0.85	0.95	0.98	1.00

6 标记 MARKING

6.1 在电容器体上应注明如下内容：

（1）生产厂商商标	AiSHi
（2）型号-额定温度	RS 105℃
（3）周期代码-我司代码-套管材质	YyWw□PET (Yy表示年份，Ww表示制造周期，□表示我司代码，我司代码："Z、Y、J、S……" PET表示套管材质)
（4）电压容量	--V--μF
（5）负极标志	

6.1 The Following Items Shall Be Marked Indelibly On The Capacitor:

（1）Manufacture's name or trade mark.	AiSHi
（2）Series - rated temperature	RS 105℃
（3）Date code- AIHUA code -sleeve material	YyWw□PET (Yy denotes last two digit of years and Ww denotes the week in which the capacitor been manufactured，□denotes the code of AIHUA，AIHUA code: " Z、Y、J、S……" PET denotes the sleeve material)
（4）Voltage / Capacity	--V--μF
（5）Negative polarity	

6.2 标记颜色 Color

套管颜色：紫色
标记颜色：白
Sleeve color：Violet
Marking color：White

7 物料编码 PART NO SYSTEM

1	2	3	4	5	6	7	8	9	10	11	12	13	14	15	16

- 16 — Sleeve code ⑧
- 13 14 15 — Terminal code⑦
- 10 11 12 — Size code⑥
- 7 8 9 — Capacitance code ⑤
- 6 — Capacitance tolerance code ④
- 4 5 — Voltage code ③
- 2 3 — Series code ②
- 1 — Category code ①

①Category code

Type	Code
	1th
Electrolytic Capacitor	E

②Series code

Series name	Code	
	2th	3th
RS	R	S

③Voltage code

WV (V)	Code	
	4th	5th
4	0	G
6.3	0	J
10	1	A
16	1	C
25	1	E
35	1	V
40	1	G
50	1	H
63	1	J
80	1	B
100	1	K
120	2	B
140	2	A
160	2	C
180	2	L
200	2	D
220	2	N
250	2	E
300	2	M
315	2	F
350	2	V
380	2	P
400	2	G
420	2	T
450	2	W
500	2	H
550	2	J

④Capacitance tolerance code

Tol.(%)	Code
	6th
-10～+10	K
-20～+20	M
-10～+30	Q
-5～+15	T
-10～+20	V
0～+20	A
-5～+20	C
-20~-10	B
-5～+5	D
0～+10	E
-20～-5	F
-15～+5	N
-20~0	G
-15~+15	H

⑤Capacitance code

Cap (μF)	Code		
	7th	8th	9th
0.10	R	1	0
0.22	R	2	2
0.33	R	3	3
0.47	R	4	7
0.68	R	6	8
1	0	1	0
1.5	1	R	5
2.2	2	R	2
3.3	3	R	3
4.7	4	R	7
5.6	5	R	6
6.8	6	R	8
8.2	8	R	2
10	1	0	0
12	1	2	0
15	1	5	0
18	1	8	0
22	2	2	0
33	3	3	0
47	4	7	0
56	5	6	0
68	6	8	0
82	8	2	0
100	1	0	1
150	1	5	1
220	2	2	1
330	3	3	1
470	4	7	1
560	5	6	1
680	6	8	1
820	8	2	1
1000	1	0	2
1500	1	5	2
2200	2	2	2
3300	3	3	2
4700	4	7	2
6800	6	8	2
10000	1	0	3
22000	2	2	3
33000	3	3	3
68000	6	8	3

⑥Size code

ΦD	Code
	10th
4	C
5	D
6.3	E
8	F
10	G
11	H
12	J
12.5	W
13	K
14	X
16	L
18	M
19	Z
20	N
22	O
25	P
30	Q
35	R
40	Y
50	S
64	T
76	U
90	V

L	Code	
	11th	12th
5	0	5
7	0	7
9	0	9
10	1	0
11	1	1
12	1	2
13	1	3
14	1	4
16	1	6
20	2	0
25	2	5
30	3	0
31	3	1
35	3	5
40	4	0
45	4	5
46	4	6
50	5	0
60	6	0
80	8	0
100	A	0
115	B	5
120	C	0
130	D	0
140	E	0
160	G	0
200	K	0

⑦Terminal code

Specification	Code	Size	
	13th	14th	15h
Bulk packing	O	-	-
编带Taping F=5mm (Φ4~Φ8)	P	5	0
Taping F=2.5mm (Φ4~Φ5)	X	2	5
Taped Straight-pack	B	5	0
		3	5
		2	5
		2	0
		1	5
Lead Cut L=3.6mm	C	3	6
Lead Cut L=11.0mm	C	B	0
Lead Forming & cut L=4.5mm	F	4	5
Kink & cut L=4.5mm	J	4	5
Long lead wire (-30mm)	G	-	-
Horizontal forming	L	-	-

⑧Sleeve code

Sleeve	Code
	16th
PVC	C
PET	T

8 加工型式 LEAD FORMING TYPE

8.1 编带 Taping

PIN Code: X
ΦD=4~5

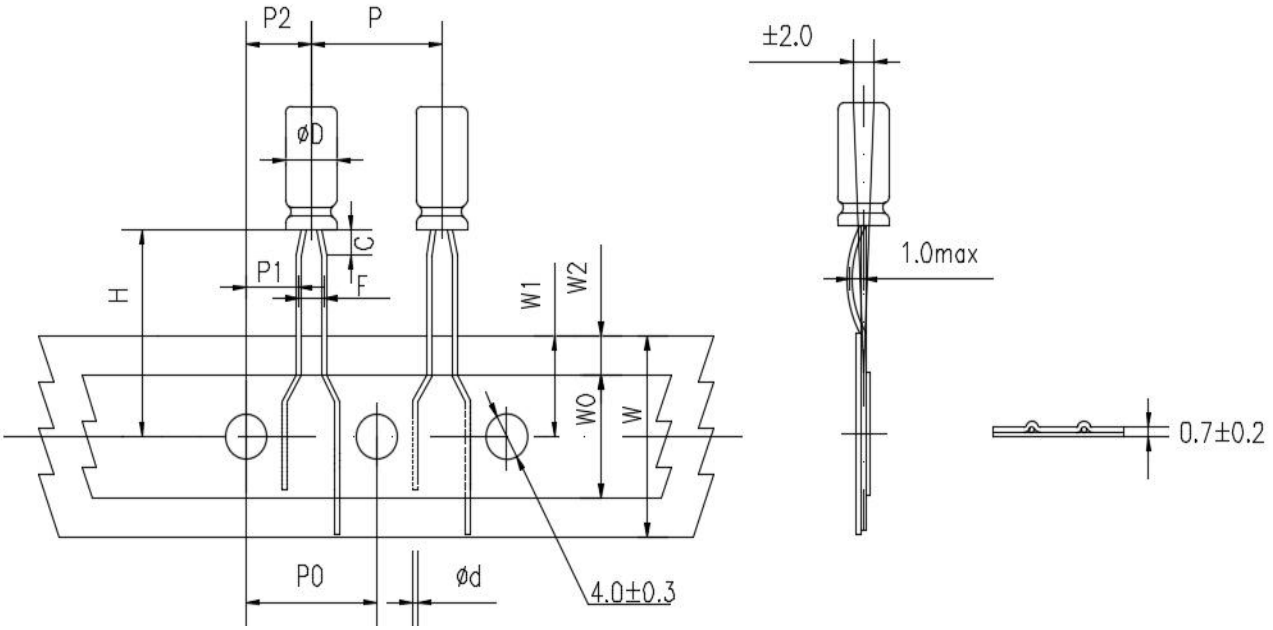

PIN Code: B
ΦD=4~8

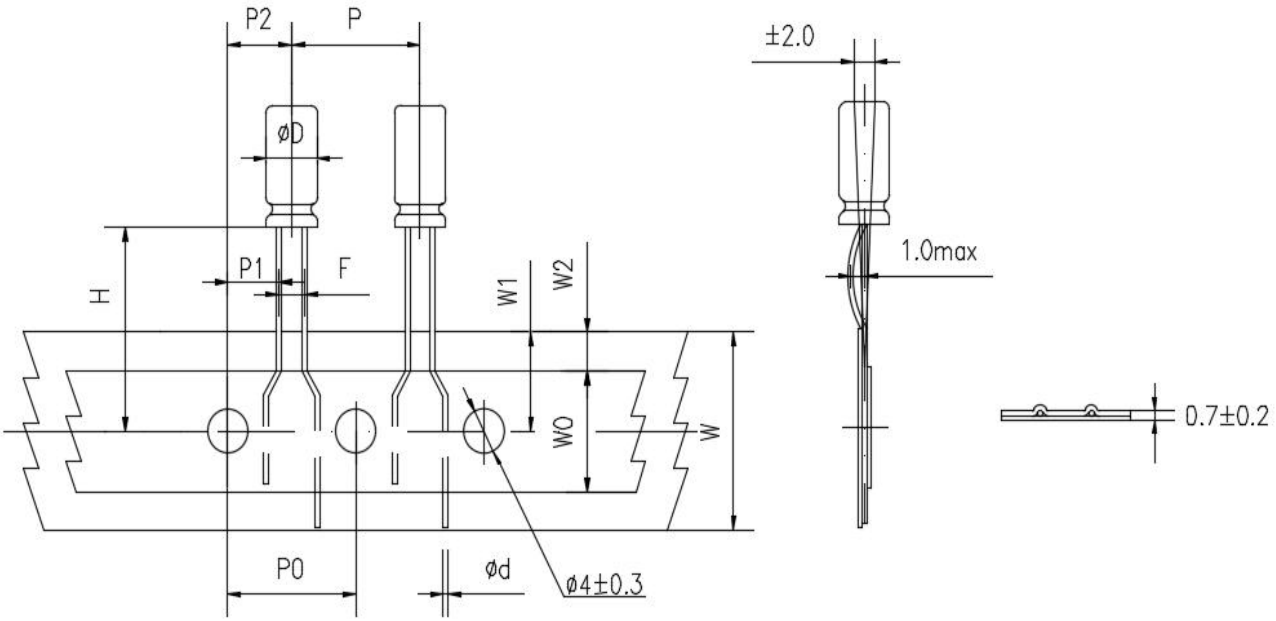

PIN Code: B
ΦD=10~13

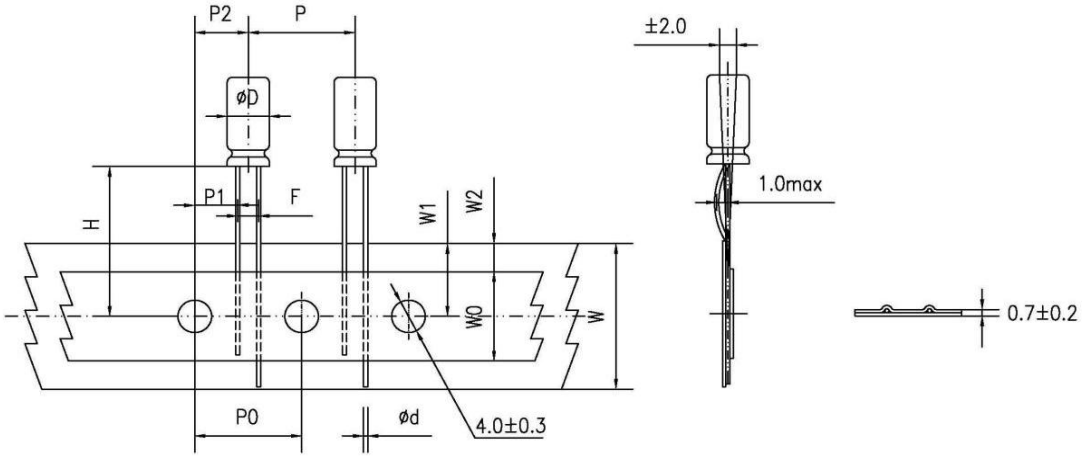

DIMENSIONS(mm)

Items	Symbol	CASE SIZE												Tolerance
		4x5 4x7		5x5 5x7		5x11 5x12		6.3x5	6.3x7 6.3x9 6.3x11 6.3x12	8x5 8x7 8x11 8x12	8x16 8x20	10x12 10x13 10x16 10x20	12.5x16 12.5x20 13x20	
Lead forming		X	B	X	B	X	B	B	B	B	B	B	B	
Lead-wire diameter	Φd	0.45		0.45		0.5		0.45	0.5	0.45/0.5	0.5/0.6	0.6	0.6	±0.05
Pitch of componet	P	12.7		12.7		12.7		12.7	12.7	12.7	12.7	12.7	15.0	±1.0
Feed hole pitch	P0	12.7		12.7		12.7		12.7	12.7	12.7	12.7	12.7	15.0	±0.2
Hole center to lead	P1	5.1	5.6	5.1	5.35	5.1	5.35	5.1	5.1	4.6	4.6	3.85	5.0	±0.7
Hole center to component	P2	6.35		6.35		6.35		6.35	6.35	6.35	6.35	6.35	7.5	±1.0
Lead to lead distance	F	2.5	1.5	2.5	2.0	2.5	2.0	2.5	2.5	3.5	3.5	5.0	5.0	±0.5
Height of component from tape center	H	18.5		18.5		18.5		18.5	18.5	18.5	18.5	18.5	18.5	±0.75
Tape width	W	18.0		18.0		18.0		18.0	18.0	18.0	18.0	18.0	18.0	±0.5
Hold down tape width	W0	11.0		11.0		11.0		11.0	11.0	11.0	11.0	11.0	11.0	min
Feed hole position	W1	9.0		9.0		9.0		9.0	9.0	9.0	9.0	9.0	9.0	+0.75 -0.5
Hole down tape position	W2	1.5		1.5		1.5		1.5	1.5	1.5	1.5	1.5	1.5	max

PIN Code: P
ΦD=4~8

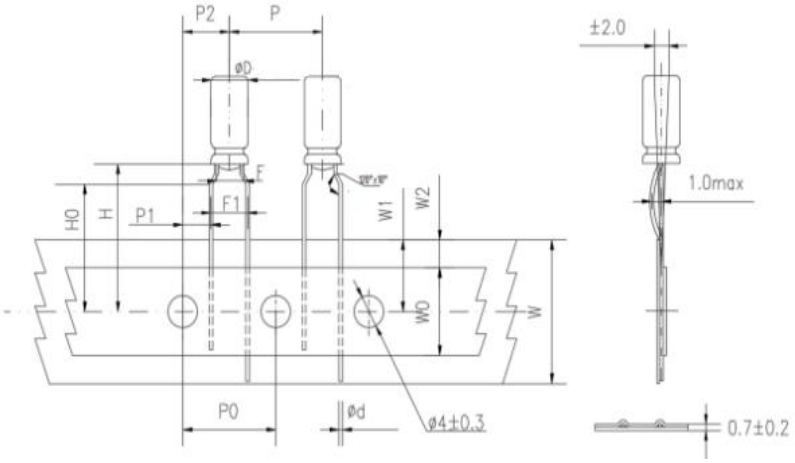

DIMENSIONS(mm)

Items	Symbol	Case Sise									Tolerance
		4x5 4x7	5x5	5x7	5x11	6.3x5	6.3x7	6.3x11	8x5 8x7 8x11 8x12	8x16 8x20	
Lead forming symbol		P	P	P	P	P	P	P	P	P	
Lead-wire diameter	Φd	0.45	0.45	0.45	0.5	0.45	0.5	0.5	0.45/0.5	0.5/0.6	±0.05
Pitch of componet	P	12.7	12.7	12.7	12.7	12.7	12.7	12.7	12.7	12.7	±1.0
Feed hole pitch	P0	12.7	12.7	12.7	12.7	12.7	12.7	12.7	12.7	12.7	±0.2
Hole center to lead	P1	3.85	3.85	3.85	3.85	3.85	3.85	3.85	3.85	3.85	±0.7
Hole center to component	P2	6.35	6.35	6.35	6.35	6.35	6.35	6.35	6.35	6.35	±1.0
Lead to lead distance	F	1.5	2.0	2.0	2.0	2.5	2.5	2.5	3.5	3.5	±0.5
Lead to lead distance	F1	5.0	5.0	5.0	5.0	5.0	5.0	5.0	5.0	5.0	±0.5
Height of component from tape center	H	18.5	18.5	18.5	18.5	18.5	18.5	18.5	18.5	18.5	±0.75
Lead-wire clinch height	H0	16.0	16.0	16.0	16.0	16.0	16.0	16.0	16.0	16.0	±0.5
Tape width	W	18.0	18.0	18.0	18.0	18.0	18.0	18.0	18.0	18.0	±0.5
Hold down tape width	W0	11.0	11.0	11.0	11.0	11.0	11.0	11.0	11.0	11.0	min
Feed hole position	W1	9.0	9.0	9.0	9.0	9.0	9.0	9.0	9.0	9.0	+0.75 -0.5
Hole down tape position	W2	1.5	1.5	1.5	1.5	1.5	1.5	1.5	1.5	1.5	max

8.2 端子切脚或成型 Lead Cut& Lead Forming

● Lead cut
PIN code：C
Range：Φ4~Φ18

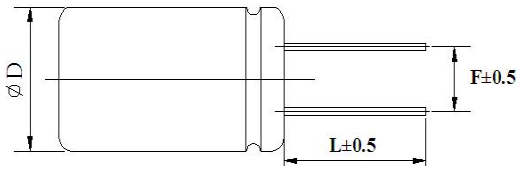

● Lead forming and cut
PIN code：F
Range：Φ4~Φ8

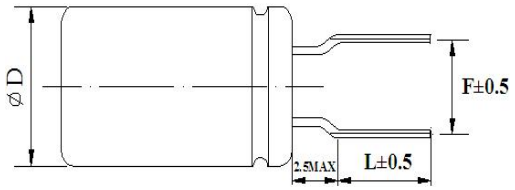

ΦD	F	L	ΦD	F	L
4	1.5	3.0~12.0	4	5.0	3.5，4.5，5.0，7.0
5	2.0	3.0~12.0	5	5.0	3.5，4.5，5.0，7.0
6.3	2.5	3.0~12.0	6.3	5.0	3.5，4.5，5.0，7.0
8	3.5	3.0~12.0	8	5.0	3.5，4.5，5.0，7.0
10	5.0	3.0~12.0	-	-	-
12.5	5.0	3.0~12.0	-	-	-
16	7.5	3.0~12.0	-	-	-
18	7.5	3.0~12.0	-	-	-

● Kink & Cutting
PIN code: J
Range: Φ10～Φ18

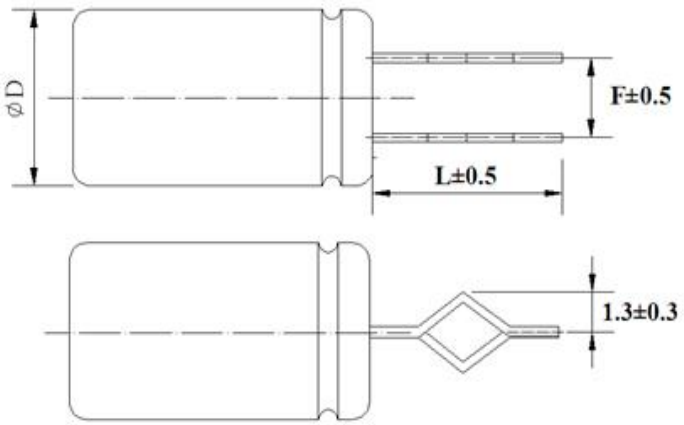

ΦD	F	L
10	5.0	4.0，4.5，5.0
12.5	5.0	4.0，4.5，5.0
16	7.5	4.0，4.5，5.0
18	7.5	4.0，4.5，5.0

9 包装PACKING

包装标签内容 Label on the packaging box or bag (The following items shall be marked on the label)

(Inside box or bag)：

1 系列 Series　2 料号 P/N　3 容量 Rated capacitance　4 电压 Rated voltage

5 数量 Quantity 6 尺寸 Size　7 批号LOT Number

编带产品按下图包装 Taped Packing

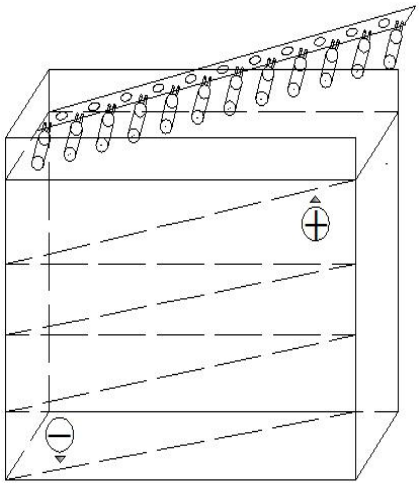

散包装按下图包装方式 Bulk Packing

外箱 carton

内盒 inner box

10 其它说明 OTHER REMARKS

10.1铝电解电容器使用注意事项

Important Information On The Application Of Aluminium Electrolytic Capacitors

(1) 直流铝电解电容器应按正确的极性使用 DC aluminium electrolytic capacitors are normally polarized

当直流铝电解电容器按反极性接入电路时，电容器会导致电子线路短路，由此产生的电流会引致电容器损坏。若电路中有可能引线施加正电压，请选用无极性产品。

When reverse voltage is applied on DC aluminium electrolytic capacitor the circuit will be short out and the capacitor will be damaged due to abnormal current flows through the capacitor. Please use non-polar types of capacitors the positive voltage is applied on the cathode terminal.

(2)在额定工作电压以下使用 Use capacitor within rated voltage

当电容器上所施加电压高于额定工作电压时，电容器的漏电流将上升，其电气特性将在短时内劣化直至损坏。
请注意电压峰值勿超出额定工作电压。

When capacitor is used at higher voltage than the rated voltage, leakage current may increase and characteristics may be deteriorated and damaged in a short period. Please take extra caution that the peak voltage should not exceed the rated voltage.

(3) 作快速充放电使用 Sudden charge and discharge

当常规电容器被用作快速充电用途,其使用寿命可能会因为容量下降,温度急剧上升等而缩减。

When aluminium electrolytic capacitors for general purpose-use are employed in rapid charge and discharge its life may be shortened resulted from capacitance decrease, heat rise, etc.

(4)电容器储存 Storage of the capacitor

① 请保管在室温5～35℃，湿度75%以下的环境。

We recommend the following conditions for storage: Ambient temperature：5~35℃,Ambient humidity：75%RH;

a) 产品储存期限:≤12个月；Storage life:≤12 months;

b) 产品储存期限 12个月时，需充电后再使用； If storage life 12 months，the products need to be charged again before

c) 存放时间超过3年的电解电容器应报废处理；If storage time three years, the products need to be discarded;

d) 库存有效期以套管上印刷的时间开始计算；Expiry date: calculating from the date marked on the sleeve;

e) 请尽量以包装状态保管；Please keep capacitors in the original package;

f) 请避免在以下环境中保管：Avoid storing the capacitors under such circumstances:

※ 溅水、高温高湿及结露的环境。With water and oil or damp & dewing location

※ 溅油、或者充满气体油成分的环境。With gas and oil.

※ 充满酸性有毒气体（硫化氢，亚硫酸，亚硝酸，氯，溴，溴化甲烷等）的环境。
With toxic gases such as hydrogen sulfide, sulfurous acid, nitrous acid, chlorine, bromine and methane

※ 阳光、臭氧、紫外线及放射线照射的环境。With direct sunlight, Ozone, ultraviolet rays or radiation.

② 当电容器长期储存后，漏电流会升高，温度愈高，漏电流上升愈快，因此应注意储存环境。在电容器上施加电压后，漏电流值降，如铝电解电容器的漏电流上升对电路有不良影响，请在使用前充电处理。

Leakage current tends to increase when capacitors have been stored for long period of time.The higher storage Temp.rise, the higher leakage current increase. Please take caution when selecting the storage location. The leakage current will decrease gradually as voltage is applied to the capacitor. The capacitor is subjected to aging before using where increased leakage may cause problems in the circuit.

(5) 施加纹波电流应小于额定值 Use capacitor within rated ripple current

施加纹波电流超过额定值后，会导致电容器体过热，容量下降，寿命缩短。电容器上标注了额定电压，请将和直流电压叠加的电压的峰值控制在额定工作电压以下。

If excessive ripple current is applied on the capacitor, excessive heat will be generated inside, the capacitance be reduced capacitor’s life shall be shortened. Rated voltage has been marked on the capacitor; therefore, the peak value of the ripple voltage should be less than the rated voltage.

(6) 使用环境温度 Ambient temperature

铝电解电容器使用寿命会受到环境温度的影响。据科学统计，使用环境温度下降10℃其使用寿命增加1倍。
Life of aluminium electrolytic capacitor is affected by the ambient temperature.It is generally known that the life doubles for each 10℃ decrease in temperature.

(7) 引出线强度 Tensile strength of lead wire

当拉力施加到电容器引出线，该拉力将作用于电容器内部，这可能导致电容器内部短路，开路或漏电流上升。在电容器焊装到电板，请勿强烈摇动电容器。
When a strong force is applied to the lead wires or terminals, stress is put on the internal connections, which may result in short circuit, open circuit or leakage current increase. Therefore it is not advisable to bend or handle a capacitor after it has been to the PC board.

(8) 焊接过程耐热性 Heat resistance at the soldering process

当电容器装至电路板浸焊或波峰焊时，其塑料套管可能因焊接时间过长、温度过高而发生破裂或二次收缩。
During soldering process, secondary shrinkage or sleeve crack may occur when soldering temperature is too high or soldering time is too long.

(9) 电路板的安装孔孔距及安装位置 Hole pitch and position of PC board

电路板安装孔的设计应与产品说明书的引线脚距相一致，如果将电容器强行插入孔距不配套的电路板，那么会有应力作用于引出线，这可能导致短路或漏电流上升。
When designing a PC board, its hole pitch should be designed to coincide with the lead pitch(lead spacing) of the specified in the catalog or specifications. When a capacitor is forcibly inserted into an unmatched hole pitch, a will put on the leads and which could result in a short circuit or increased leakage current.

(10) 关于焊接以后的清洗 Cleaning after soldering

①电容器不能用卤化有机物系列的清洗剂进行清洗。如果必须清洗，请使用能够保证电容器质量的清洗剂。
The aluminium electrolytic capacitors should be free of halogenated solvents during board cleaning after soldering. Use solvent proof capacitors when halogenated solvents are used.

②对于能够保证电容器质量的清洗剂，清洗后请不要在清洗溶液或者密封容器中保管。清洗后的电容器请和电路板一起在热风下燥10分钟以上，热风的温度不可高于电容器规定上限温度。
After cleaned with the solvent which can guarantee the quality of capacitors, the capacitors should not be kept in solvent environments of non-ventilated places. Let the capacitors after cleaning dry with hot blast fully above 10 mins and the temperature of hot blast should not be over than specified upper limit of that of capacitors.

(11) 关于固定剂、镀层(涂层剂)以及PCB Concerning adhesives、coating materials(coating agent) and PCB.

①请不要使用含有卤素的固定剂、镀层(涂层剂)以及PCB。
Do not use halogen-containing adhesives, coating materials(coating agent) and PCB to fix aluminum electrolytic capacitors.

②请不要让固定剂及镀层（涂层剂）将电容器封口部位（端子一侧）全部封住。
Do not cover up all the sealing area of capacitors with adhesives or coating materials(coating agent),make coverage only partial.

10.2符合 RoHS RoHS Compliance

符合欧盟RoHS的最新标准，若客户有特殊要求，按照双方签订的相关协议为准。
Completely in accordance with the latest standard of RoHS or relevant agreements reached by both parts if customer has special requirements.