Lonten N-channel 650V, 4A, 0.95Ω LonFET™ Power MOSFET

Description

LonFET™ Power MOSFET is fabricated using **advanced super junction** technology. The resulting device has extremely low on resistance, making it especially suitable for applications which require superior power density and outstanding efficiency.

Features

- Ultra low $R_{DS(on)}$
- Ultra low gate charge (typ. Q_g=10nC)
- 100% UIS tested
- RoHS compliant

Applications

- Power factor correction (PFC).
- Switched mode power supplies (SMPS).
- Uninterruptible power supply (UPS).

Product Summary

V_{DS}	650V
$R_{DS(on), max}$	0.95Ω
I_{DM}	12A
$Q_{g,typ}$	10nC

Pin Configuration

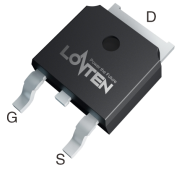

TO-252

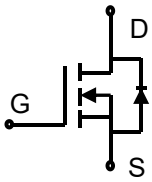

N-Channel MOSFET

Absolute Maximum Ratings

Parameter	Symbol	Value	Unit
Drain-Source Voltage	V_{DSS}	650	V
Continuous drain current [1] (T_C = 25°C)	I_D	4	A
(T_C = 100°C)		3.2	A
Pulsed drain current [2]	I_{DM}	12	A
Gate-Source voltage	V_{GSS}	±30	V
Avalanche energy, single pulse [3]	E_{AS}	120	mJ
Power Dissipation	P_D	60	W
Operating and Storage Temperature Range	T_J, T_{STG}	-55 to +150	°C
Continuous diode forward current	I_S	4	A
Diode pulse current	$I_{S,pulse}$	12	A

Thermal Characteristics

Parameter	Symbol	Value	Unit
Thermal Resistance, Junction-to-Case	$R_{\theta JC}$	2.08	°C/W
Thermal Resistance, Junction-to-Ambient, minimal Footprint [4]	$R_{\theta JA}$	62	°C/W
Soldering temperature, wave soldering only allowed at leads. (1.6mm from case for 10s)	T_{sold}	260	°C

Package Marking and Ordering Information

Device	Device Package	Marking	Units/Reel
LSG65R950GM	TO-252	LSG65R950GM	2500

Electrical Characteristics

T_c = 25°C unless otherwise noted

Parameter	Symbol	Test Condition	Min.	Typ.	Max.	Unit
Static characteristics						
Drain-source breakdown voltage	BV_{DSS}	V_{GS}=0V, I_D=250uA	650	-	-	V
Gate threshold voltage	$V_{GS(th)}$	V_{DS}=V_{GS}, I_D=250uA	2.5	3.7	4.5	V
Drain cut-off current	I_{DSS}	V_{DS}=650V, V_{GS}=0 V,T_j =25°C	-	-	1	μA
Gate leakage current, Forward	I_{GSSF}	V_{GS}=30V, V_{DS}=0 V	-	-	100	nA
Gate leakage current, Reverse	I_{GSSR}	V_{GS}=-30V, V_{DS}=0 V	-	-	-100	nA
Drain-source on-state resistance	$R_{DS(on)}$	V_{GS}=10V, I_D=2A T_j = 25°C T_j = 150°C	- - -	 0.908 2.27	 0.95 -	Ω
Gate resistance	R_G	f=1 MHz, open drain	-	8.13	-	Ω
Dynamic characteristics						
Input capacitance	C_{iss}	V_{DS} =100V, V_{GS}=0V, f=250kHz	-	357.06	-	pF
Output capacitance	C_{oss}		-	16.46	-	
Reverse transfer capacitance	C_{rss}		-	0.42	-	
Turn-on delay time	$t_{d(on)}$	V_{DD} =400V, I_D=2A R_G = 10Ω, V_{GS}=10V	-	26.9	-	ns
Rise time	t_r		-	11.1	-	
Turn-off delay time	$t_{d(off)}$		-	25.8	-	
Fall time	t_f		-	35.3	-	
Gate charge characteristics						
Gate to source charge	Q_{gs}	V_{DD}=520V, I_D=2A, V_{GS}=0 to 10 V	-	1.9	-	nC
Gate to drain charge	Q_{gd}		-	5.0	-	
Gate charge total	Q_g		-	10.0	-	
Gate plateau voltage	$V_{plateau}$		-	5.41	-	V
Reverse diode characteristics						
Diode forward voltage	V_{SD}	V_{GS}=0 V, I_F=2A	-	-	1.1	V
Reverse recovery time	t_{rr}	V_R=400V, I_F=2A, dI_F/dt=100 A/μs	-	191.6	-	ns
Reverse recovery charge	Q_{rr}		-	858.6	-	nC
Peak reverse recovery current	I_{rrm}		-	10.53	-	A

Notes:

1. Limited by maximum junction temperature and duty cycle.
2. Limited by maximum junction temperature, maximum duty cycle is 0.75.
3. I_{AS}=2A, L=60mH, V_{DD}=60V, Starting Tj= 25°C.
4. The value of R_{thJA} is measured by placing the device in a still air box which is one cubic foot.

Electrical Characteristics Diagrams

Fig 1: Output Characteristics

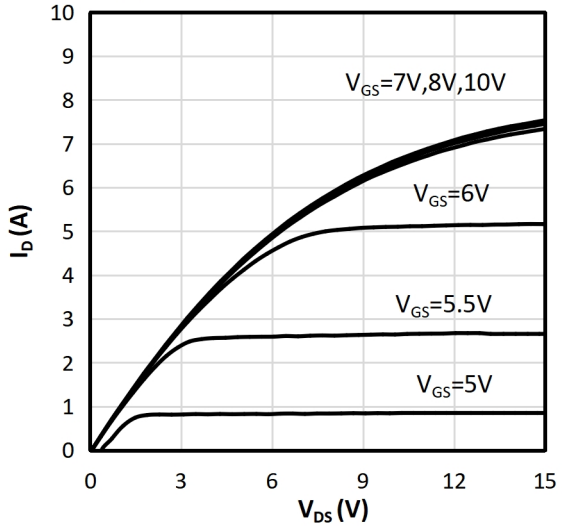

Fig 2: Transfer Characteristics

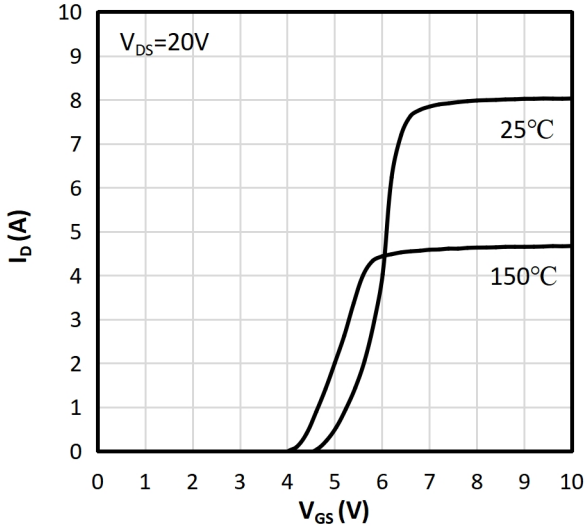

Fig 3: Rds(on) vs Drain Current

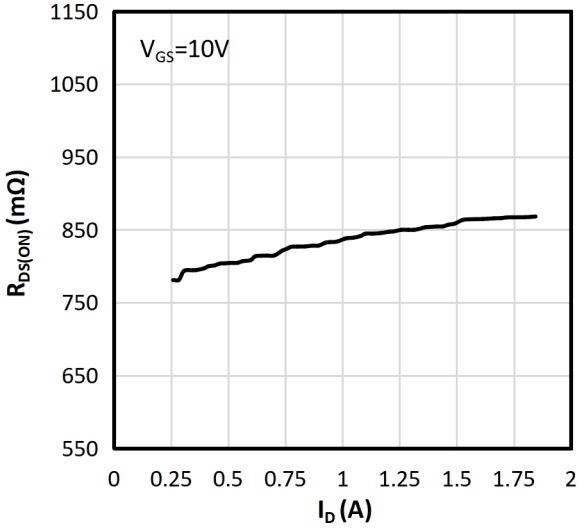

Fig 4: Rds(on) vs. Temperature

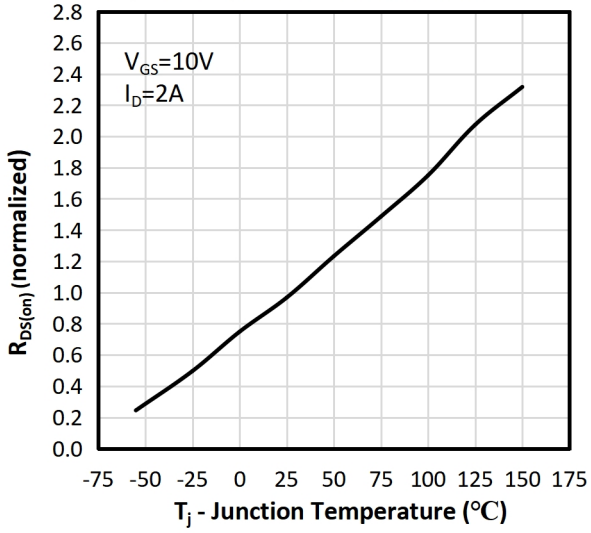

Fig 5: Breakdown Voltage vs. Temperature

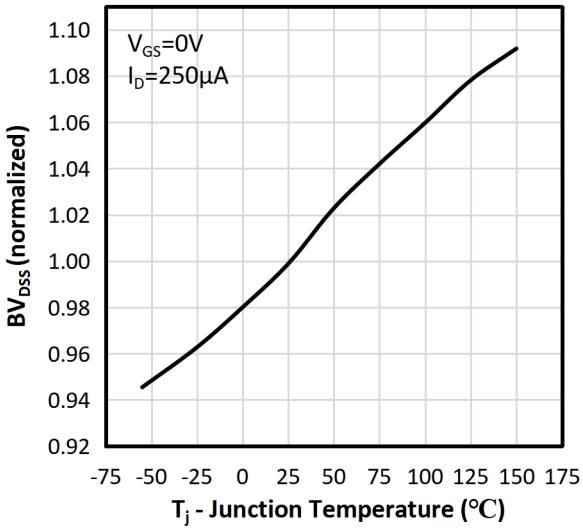

Fig 6: Threshold voltage vs. Temperature

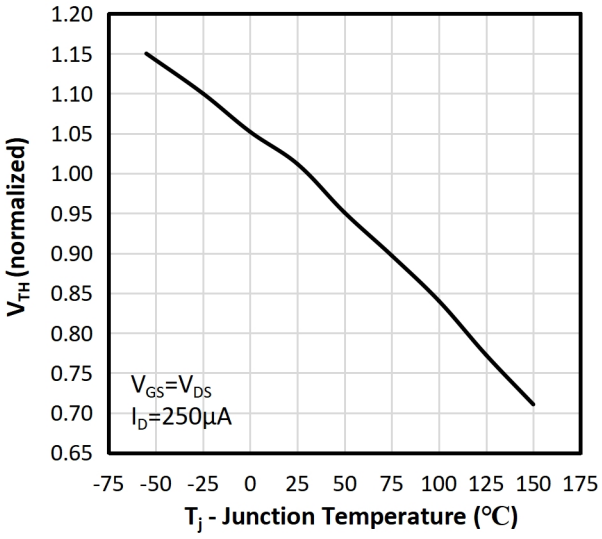

Fig 7: Body-Diode Characteristics

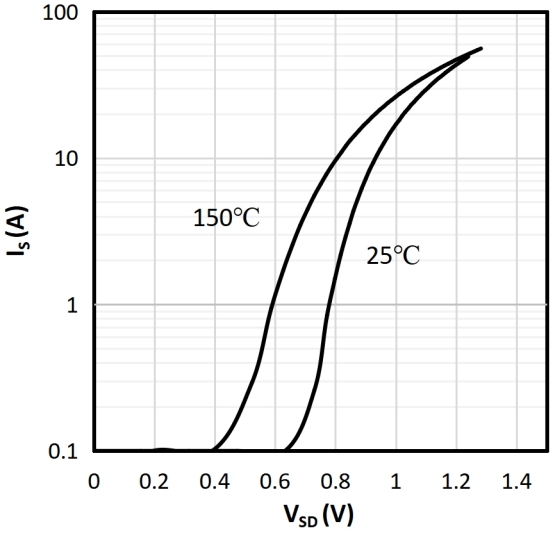

Fig 8: Capatitance Characteristics

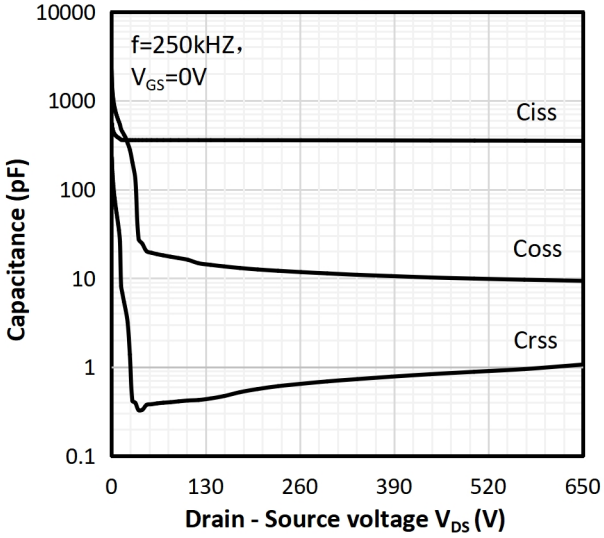

Fig 9: Gate charger Characteristics

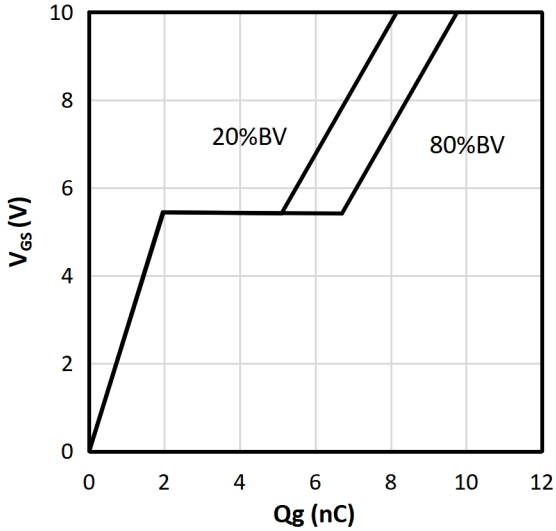

Fig 10: Drain Current Derating

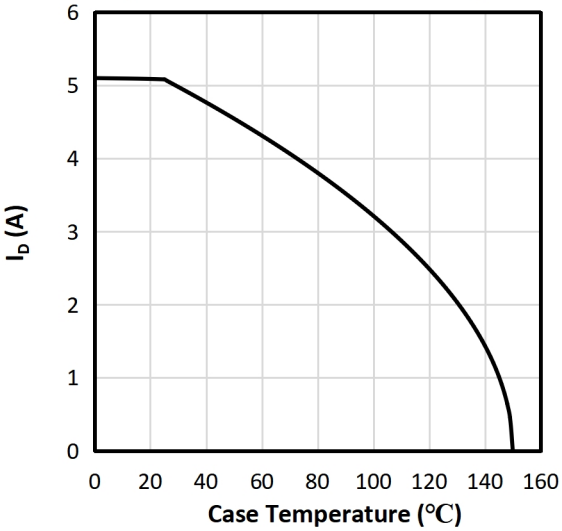

Fig 11: Power Dissipation vs.Temperature

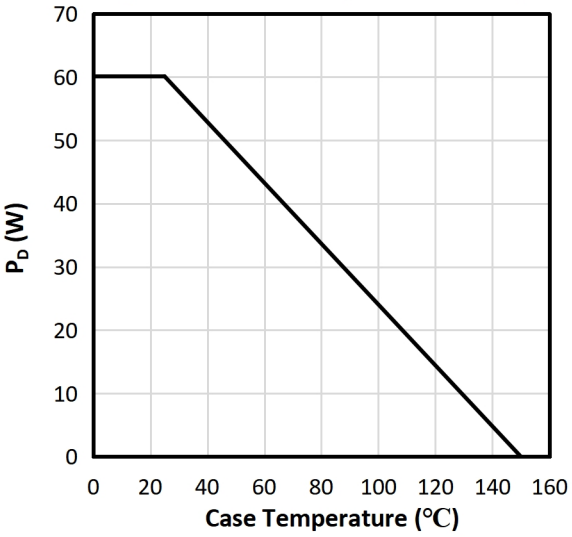

Fig 12: Safe Operating Area

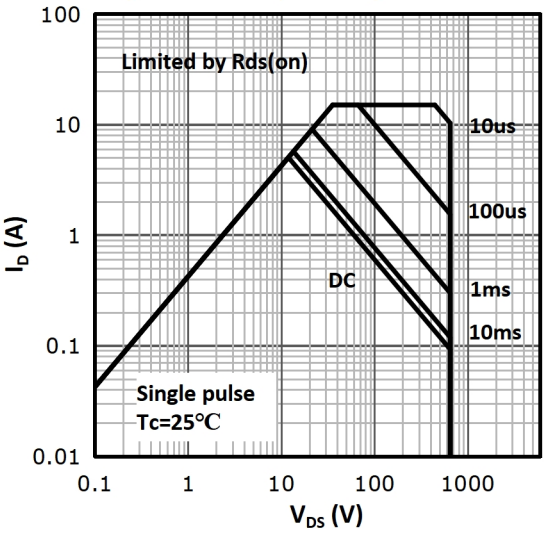

Figure 13. Normalized Maximum Transient Thermal Impedance (R_{thJC})

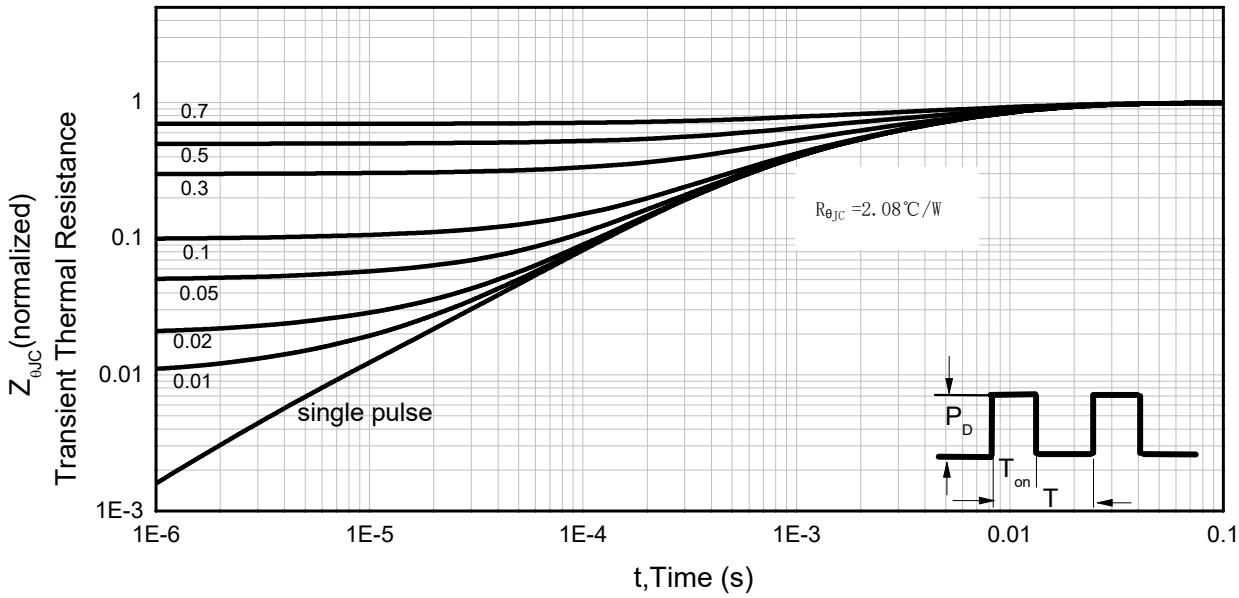

Resistive Switching Test Circuit & Waveform

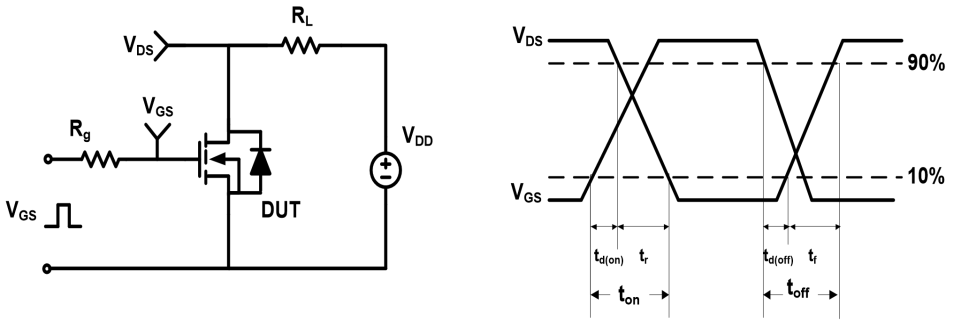

Unclamped Inductive Switching (UIS) Test Circuit & Waveform

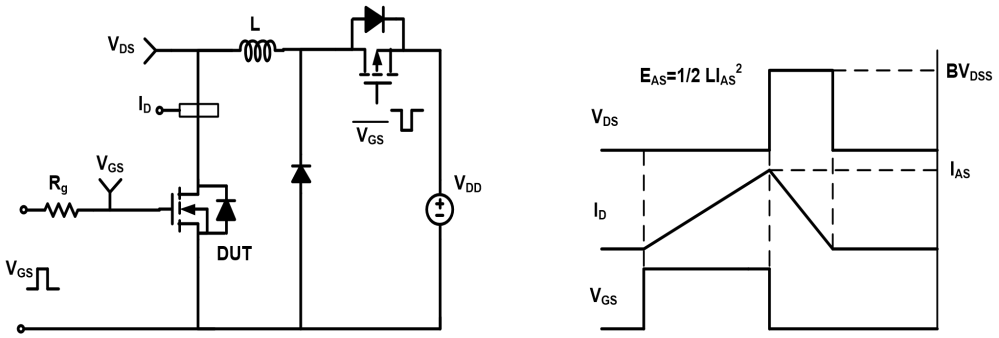

Diode Recovery Test Circuit & Waveform

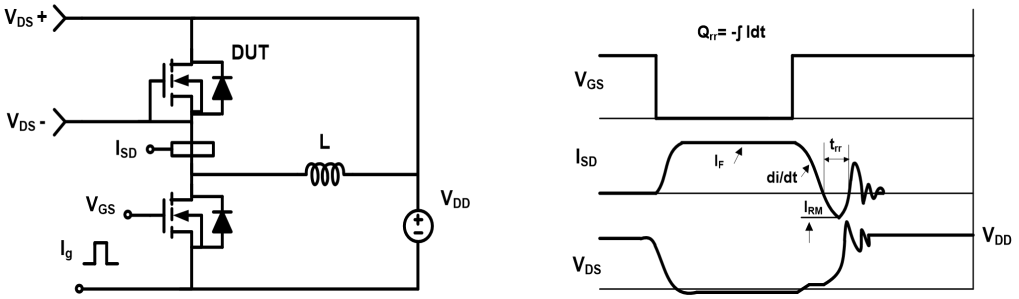

Mechanical Dimensions for TO-252

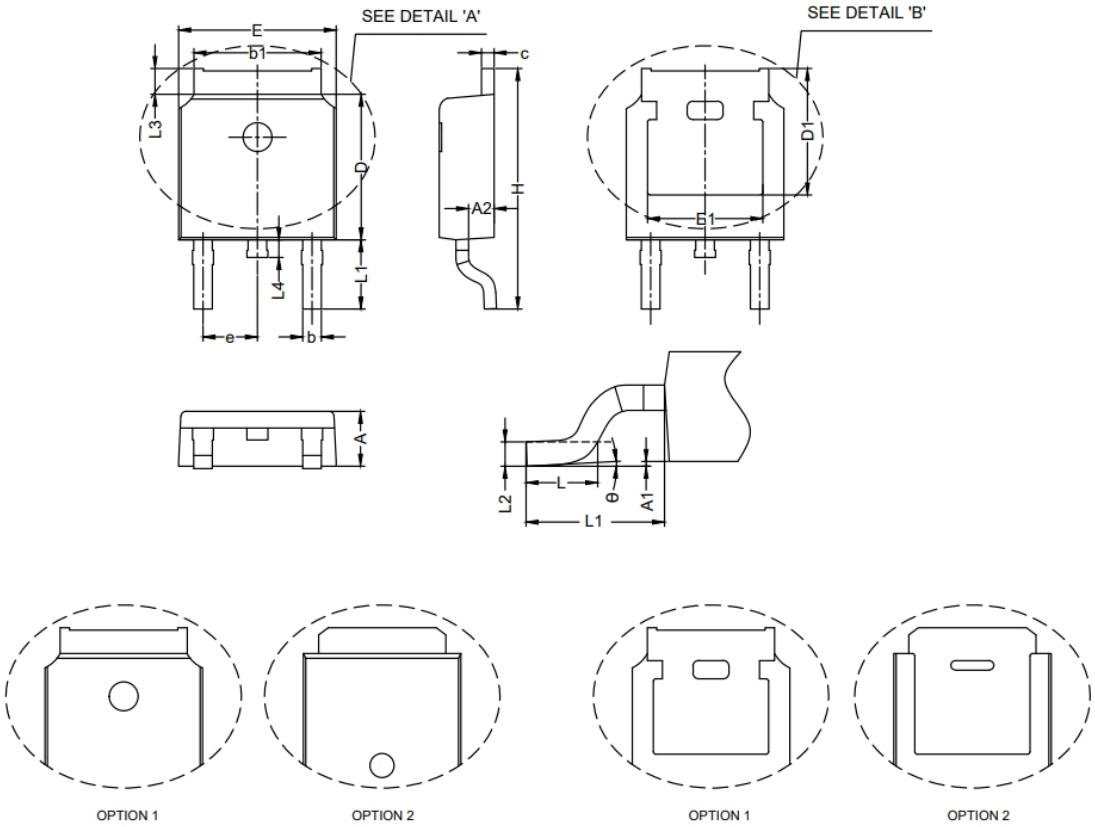

SYMBOLS	MILLIMETERS		INCHES	
	MIN	MAX	MIN	MAX
A	2.10	2.50	0.083	0.098
A1	0.00	0.20	0.000	0.008
A2	0.85	1.17	0.033	0.046
b	0.60	0.90	0.024	0.035
b1	4.95	5.48	0.195	0.216
c	0.41	0.61	0.016	0.024
D	5.95	6.35	0.234	0.250
D1	5.21	-	0.205	-
E	6.35	6.80	0.250	0.268
E1	4.32	-	0.170	-
e	2.286 BSC		0.090 BSC	
H	9.40	10.50	0.370	0.413
L	0.95	1.78	0.037	0.070
L1	2.90 REF		0.114 REF	
L2	0.51 BSC		0.020 BSC	
L3	0.88	1.28	0.035	0.050
L4	-	1.02	-	0.040
θ	0°	10°	0°	10°

Version Information

LSG65R950GM
Revision 1.3

Disclaimer

The content specified herein is for the purpose of introducing LONTEN's products (hereinafter "Products"). The information given in this document shall in no event be regarded as a guarantee of conditions or characteristics. Examples of application circuits, circuit constants and any other information contained herein illustrate the standard usage and operations of the Products. The peripheral conditions must be taken into account when designing circuits for mass production.

LONTEN does not assume any liability for infringement of patents, copyrights, or other intellectual property rights of third parties by or arising from the use of the Products or technical information described in this document.

The Products are not designed or manufactured to be used with any equipment, device or system which requires an extremely high level of reliability the failure or malfunction of which may result in a direct threat to human life or create a risk of human injury (such as a medical instrument, transportation equipment, aerospace machinery, nuclear-reactor controller, fuel-controller or other safety device). LONTEN shall bear no responsibility in any way for use of any of the Products for the above special purposes.

Although LONTEN endeavors to improve the quality and reliability of its products, semiconductor products have specific characteristics such as the occurrence of failure at a certain rate and malfunctions under certain use conditions. Please be sure to implement safety measures to guard them against the possibility of physical injury, and injury or damage caused by fire in the event of the failure of a LONTEN product.

The content specified herein is subject to change for improvement without notice. When using a LONTEN product, be sure to obtain the latest specifications.