REVISIONS					
REV.	ECN NO.	LOCATION	DESCRIPTION	DATE	DESIGN
A0	N/A		INITIAL RELEASE	/	/
A1	N/A		图面升级整理图面	2025.12.23	阿树

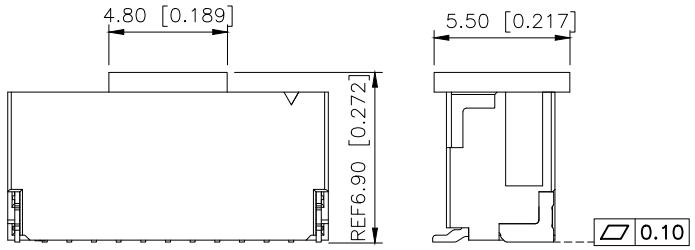

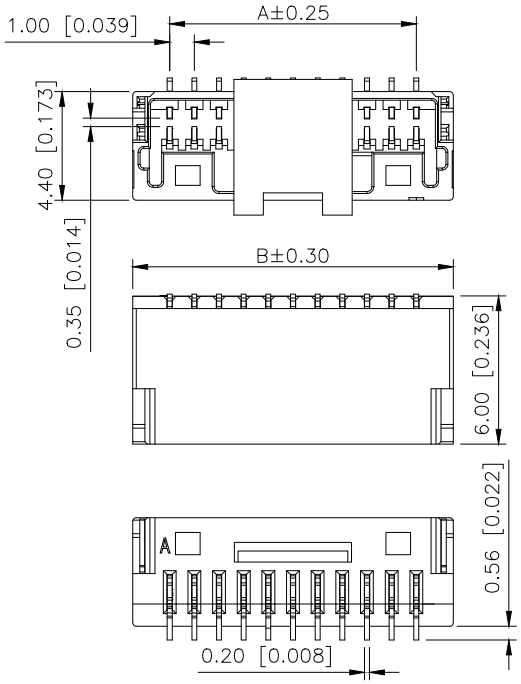

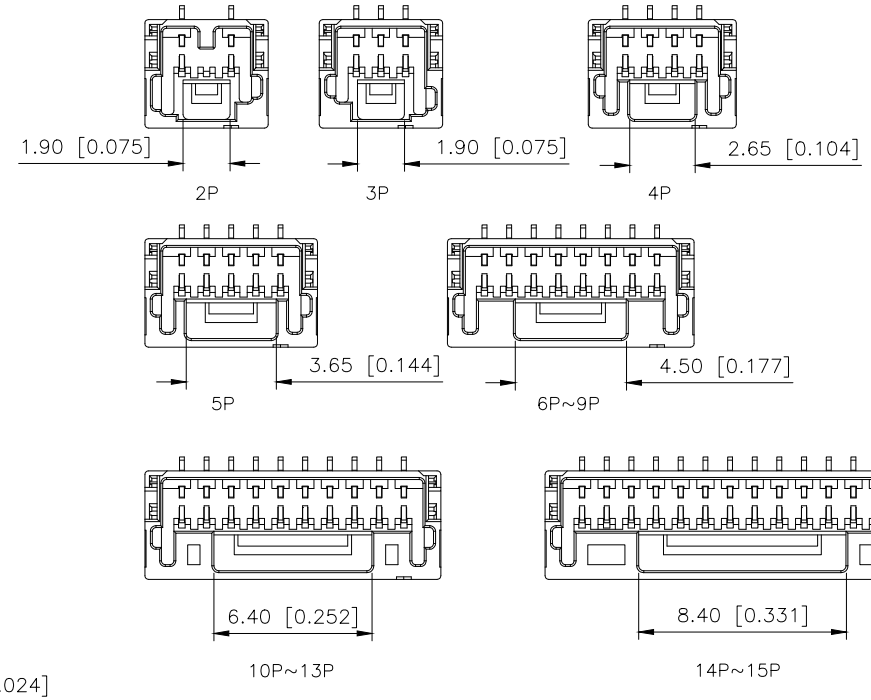

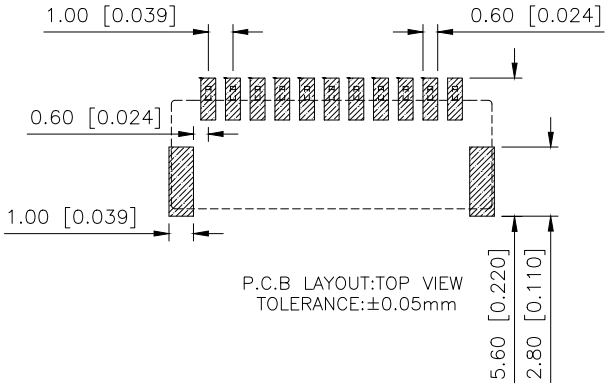

P.C.B LAYOUT:TOP VIEW
TOLERANCE:±0.05mm

■SPECIFICATIONS
- •Voltage rating:50V AC,DC
- •Current rating:1A,AC,DC
- •Withstanding Voltage:500V AC/minute
- •Insulation resistance:100MΩ min
- •Temperature range:−45°C+95°C
- •Contact resistance:20mΩ max

PART NO.:

X1010 W V S−13−LP SN
① ② ③ ④ ⑤ ⑥ ⑦

①Series No
②Category:W−Wafer
③Welding Board Angle:V−Stright 180°
④Welding Way: S−SMT
⑤Row No.Pin No:XX−02~15Pin
⑥Material:LP−LCP UL94V−0
⑦Planting: SN−Tin−Plated
V01−Gold Flsh

PART NO.	Dimensions (mm)	
	A	B
02	2.00	5.00
03	2.00	5.00
04	3.00	6.00
05	4.00	7.00
06	5.00	8.00
07	6.00	9.00
08	7.00	10.00
09	8.00	11.00
10	9.00	12.00
11	10.00	13.00
12	11.00	14.00
13	12.00	15.00
14	13.00	16.00
15	14.00	17.00

PART NO	Material	Material(Pin)	Suitable XKB Housing
X1010WVS−13−LPSN	LCP	Brass	X1010H

AuGLAR	±5°
X.	±0.40
X.x	±0.30
X.xx	±0.20
X.xxx	±0.15
UNSPECIFIED TOLERAuCES	

XKB Connection 星创

DESIGN	阿树	VIEW:	MODEL TYPE: 1.0mm Crimp Style Housing
CHECKED		UNIT: mm/in	PART NO.: X1010WVS−13−LPSN
APPROVED		SIZE: A4	DWG NO.:

XKB INDUSTRIAL PRECISION CO.,LIMITED

SCALE	PAGE	REVISION
N/A	1/1	A1