eMMC Device

153FBGA 8.0x7.5

64GB eMMC5.1

Datasheet

Biwin Storage Technology CO.,Ltd

BIWIN RESERVES THE RIGHT TO CHANGE PRODUCTS, INFORMATION AND SPECIFICATIONS WITHOUT NOTICE.

Products and specifications discussed herein are for reference purposes only. All information discussed herein is provided on an "AS IS" basis, without warranties of any kind.

This document and all information discussed herein remain the sole and exclusive property of BIWIN. No license of any patent, copyright, mask work, trademark or any other intellectual property right is granted by one party to the other party under this document, by implication, estoppel or other-wise.

For updates or additional information about BIWIN products, contact your nearest BIWIN office.
© 2024 BIWIN Co., Ltd. All rights reserved.

Preliminary

REFERENCE ONLY TO ANY INTELLECTUAL PROPERTY RIGHTS IN BIWIN PRODUCT OR TECHNOLOGY. ALL INFORMATION IN THIS DOCUMENT IS PROVIDED.

Revision History

Version	Date	Description
0.1	2024/11	Preliminary Release

Biwin Storage Technology CO.,Ltd.

Preliminary

Table of Contents

1. INTRODUCTION 4
1.1 General Description 4
1.2 Product Information 4
1.3 Features 5
1.4 PIN Configuration 6
1.5 PIN Description 7
1.6 Package Dimension 8
2. PRODUCT SPECIFICATION 9
2.1 Mechanical Specification 9
2.2 Operating Conditions 10
2.3 Logical Unit Information 10
2.4 Performance 11
2.5 Independent Technology 11
2.6 Error Detect and Management 11
3. SUPPORTED FEATURES 12
3.1 General Description 12
3.2 HS400 Bus Speed Mode 12
3.3 Additional Timing changes in HS400 mode 16
3.4 Production State Awareness 16
3.5 Field Firmware Update (FFU) 17
3.6 Secure Removal Type 18
3.7 Overshoot/Undershoot Specification 19
3.8 HS400 Reference Load 20
3.9 RPMB Throughput Improvement 20
4. DC PARAMETERS 21
4.1 Power Consumption 21
4.2 Power Requirement 21
5. REGISTER VALUES 22
5.1 OCR Register 22
5.2 CID Register 23
5.3 CSD Register 23
5.4 Extended CSD Register 25
5.5 RCA Register 33
5.6 DSR (Driver Stage Register) 33
6. DESIGN GUIDE FOR PCB LAYOUT 34
7. MARKING 35

Biwin Storage Technology CO.,Ltd.

Preliminary

1. INTRODUCTION

1.1 General Description

BIWIN eMMC is an embedded flash storage designed in the form of FBGA package, using MMC protocol V5.1 interface. It combines advanced NAND flash and intelligent flash controller in single package, offering excellent performance and high reliability storage solution to embedded applications.

With industry standard eMMC 5.1 protocol, BIWIN eMMC is empowered with many new features such as Discard, Boot partitions, Secure Erase, and Trim, which are optimal for code reliability and data storage.

eMMC has an intelligent controller to manage interface protocols, data storage and retrieval, error detect and correction(ECC) algorithms, defect handling and diagnostics, and power management. The firmware inside has functions of Wear Leveling Management, Garbage Collection, and Bad Block Management.

eMMC also has features as small size, low power consumption, non-volatile, wide range of operation temperature, high reliability, which makes eMMC the ideal solution for smart phones, Tablet, digital cameras, PDAs, PMP, GPS, media player and etc.

1.2 Product Information

eMMC Part ID	Capacity	Size	Package
BWCTL0211X64G	64GB	8.0*7.5*0.65mm	FBGA153

1.3 Part Number Chart

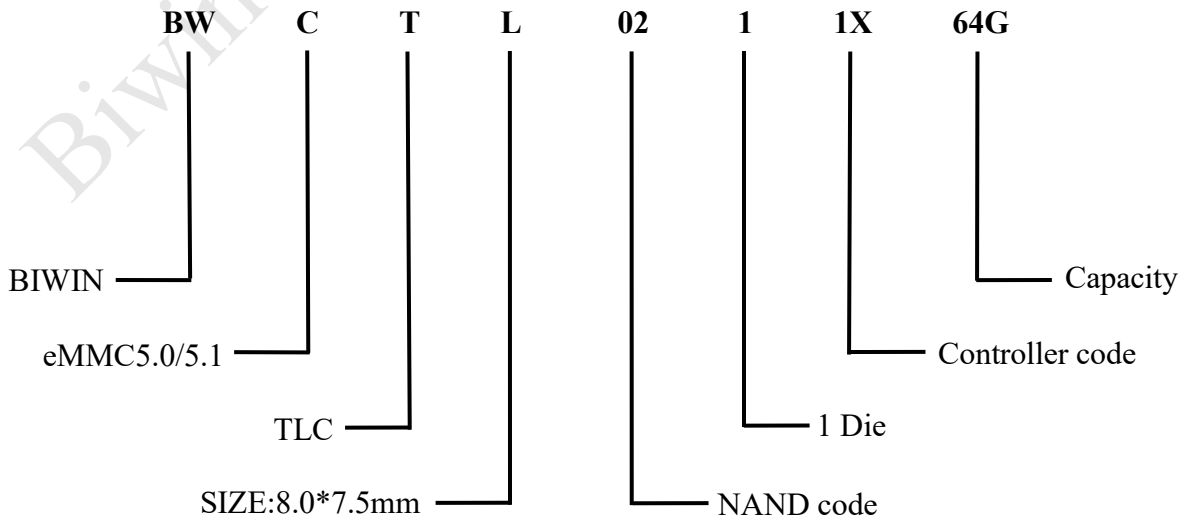

Biwin Storage Technology CO.,Ltd.
Preliminary

1.4 Features

- Complies with the eMMC standard JESD 84-B51
- 12 signal interface (including CMD, CLK, DS, DAT[7:0], and RST_n)
- Programmable bus width: 1-bit, 4-bit, and 8-bit
- Operating Voltage Range
  - VCC: 2.7V - 3.6V
  - VCCQ: 1.7 - 1.95V / 2.7- 3.6V
- Support normal speed SDR mode and high speed DDR mode
- HS400 and HS200 mode support
- Up to 200MHz clock speed
- Class 0 (basic), Class 2 (block read), Class 4 (block write), Class 5 (erase), Class 6 (write protection), Class 7 (lock/unlock)
- High-speed, Dual Data Rate Boot support
- Supports Boot and Alternative Boot Mode
- Replay Protected Memory Block (RPMB)
- Secure Erase, Secure Trim, and Trim
- High Priority Interrupt (HPI)
- Enhanced Reliable Write
- 32-bit RISC based architecture with advanced mapping technology
- Optimized algorithm for embedded system access
- Dynamic power management technology
- Quick standby, auto-suspend, and sleep operations
- Dimensions& Package
- 8.0mm x 7.5mm x 0.65mm
- FBGA 153 ball
- Capacities: 64GB
- High data transfer speed
- Up to 104MB/s transfer rate(52MHz, DDR mode)
- Up to 400MB/s transfer rate(200MHz, HS400 mode)
- Temperature
  - Operation Temperature (-25°C to +85°C)
  - Storage Temperature (-40°C to +85°C)
  - Soldering Temperature 260°C

Biwin Storage Technology CO.,Ltd.

Preliminary

1.5 PIN Configuration

	1	2	3	4	5	6	7	8	9	10	11	12	13	14
A	NC	NC	DAT0	DAT1	DAT2	VSS	NC	NC	NC	NC	NC	NC	NC	NC
B	NC	DAT3	DAT4	DAT5	DAT6	DAT7	NC	NC	NC	NC	NC	VSF	NC	NC
C	NC	VDDi	NC	VSS	NC	VCCQ	NC	NC	NC	NC	NC	NC	NC	NC
D	NC	NC	NC	NC								NC	NC	NC
E	NC	NC	NC		NC	VCC	VSS	NC	NC	NC		NC	NC	NC
F	NC	NC	NC		VCC					NC		NC	NC	NC
G	NC	NC	NC		VSS					NC		NC	NC	NC
H	NC	NC	NC		DS					VSS		NC	NC	NC
J	NC	NC	NC		VSS					VCC		NC	NC	NC
K	NC	NC	NC		RST_n	NC	NC	VSS	VCC	NC		NC	NC	NC
L	NC	NC	NC									NC	NC	NC
M	NC	NC	NC	VCCQ	CMD	CLK	NC	NC	NC	NC	NC	NC	NC	NC
N	NC	VSS	NC	VCCQ	VSS	NC	NC	NC	NC	NC	NC	NC	NC	NC
P	NC	NC	VCCQ	VSS	VCCQ	VSS	NC	NC	NC	NC	NC	NC	NC	NC

Figure.1 FBGA153 Pin Out

Biwin Storage Technology CO.,Ltd.

Preliminary

1.6 PIN Description

Table.1 153 FBGA Ball Information

Ball Name	Type	Ball Function
CLK	Input	Clock: Each cycle directs a 1-bit transfer on the command and DAT lines.
CMD	Input	Command: A bidirectional channel used for device initialization and command transfers. Command has two operating modes: 1) Open-drain for initialization. 2) Push-pull for fast command transfer.
RST_n	Input	Reset signal pin
VDDi	Input	The internal regulator connection to an external decoupling capacitor.
DS	Output	Data strobe
DAT[7:0]	I/O	Bidirectional channel used for data transfer.
VCC	Supply	Flash memory I/F and Flash memory power supply.
VCCQ	Supply	Memory controller core and MMC interface I/O power supply.
VSS / VSSQ	Supply	Power supply ground reference.
NC	-	No connect: Not internally connected.
VSF	Input/Output	Vendor specific function:must be left floating.

Biwin Storage Technology CO.,Ltd.

Preliminary

1.7 Package Dimension

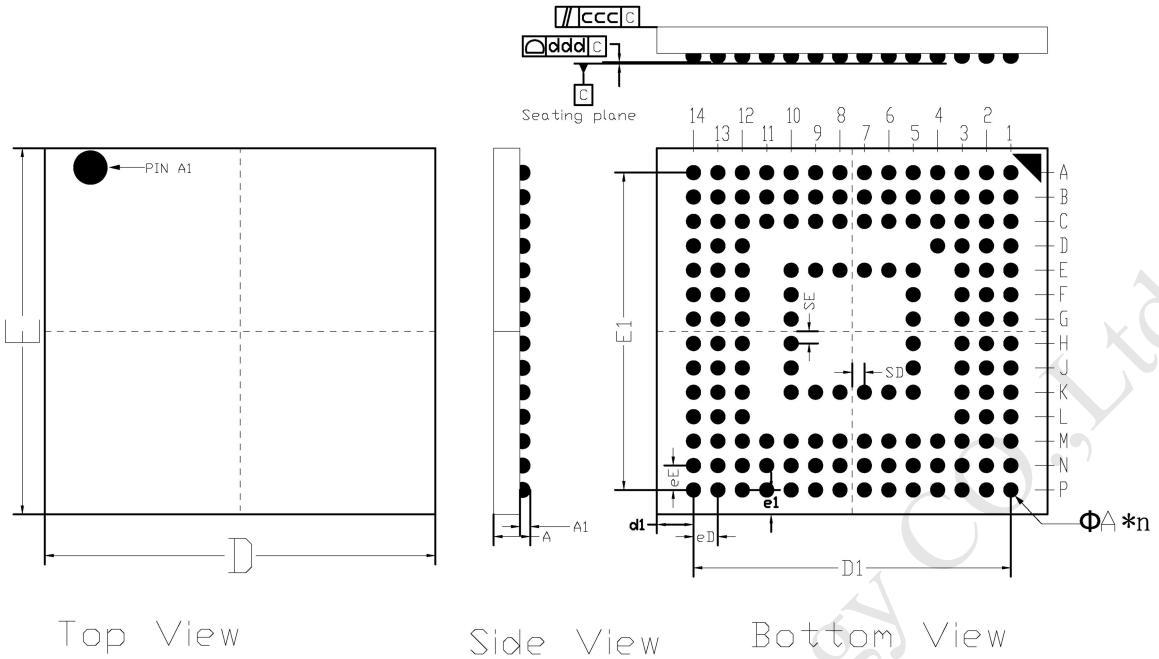

ITEM	Symble	Unitmm		
		Min	Norm	Max
BODY SIZE	D	7.90	8.00	8.10
	E	7.40	7.50	7.60
TOTAL THICNESS	A	0.55	0.65	0.75
STAND OFF	A1	0.18	0.21	0.24
EDGE BALL (CENTER TO CENTER)	D1	6.50		
	E1	6.50		
BALL PITCH	eD	0.50		
	eE	0.50		
even number of balls (eE/2,eD/2) odd number of balls (0)	SE	0.25		
	SD	0.25		
BALL COUNT	n	153		
BALL WIDTH (after reflow)	ΦA	0.29	0.32	0.35
BALL TO OUTLINE	d1	0.65	0.75	0.85
	e1	0.40	0.50	0.60
COPLANARITY	ddd			0.08
Mold package warpage	ccc			0.08
JEDEC	MO-276P			

Notice: 1.Ball diameter: 0.3mm (Before reflow)
2."◗"---bumping ball location
3.In the diagram,there are 153 ball locations in all.

Figure.2 8.0mm * 7.5mm * 0.65mm Package Dimension

Biwin Storage Technology Co.,Ltd.

Preliminary

2. PRODUCT SPECIFICATION

2.1 Mechanical Specification

2.1.1 eMMC Device Functional Block Diagram

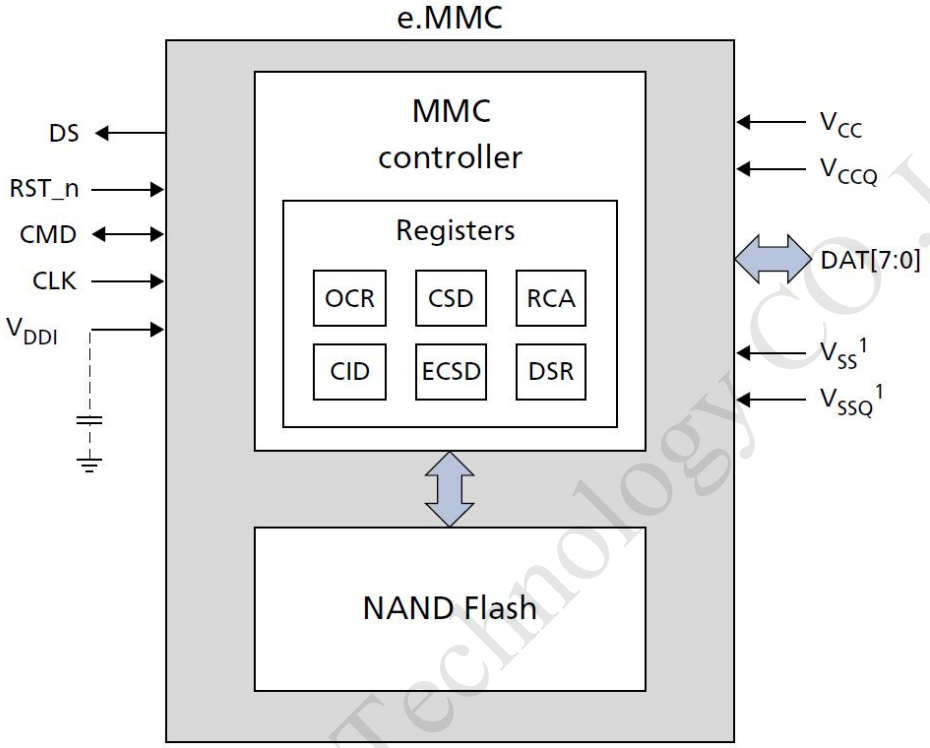

NOTE:

VSS and VSSQ are internally connected.

Figure.3 eMMC Device Functional Block Diagram

2.1.2 eMMC Device Functional Description

Biwin eMMC contains an intelligent eMMC Flash controller with JEDEC eMMC V5.1 interface, which achieves high data transfer rate and provides many new features. The feature was not founded in the other types of storage device:

- Support Multiple User Data Partition
- Signed access to a replay Protected Memory Block
- Support dual data rate transfer
- High speed boot
- Enhanced Write Protection with Permanent and Partial protection options
- Support hardware reset signal
- Optional high priority interrupt mechanism

Biwin Storage Technology CO.,Ltd.
Preliminary

2.2 Operating Conditions

Table.2 Supply voltage for operating

Parameter	Symbol	Min	Typ.	Max	Unit
Supply Voltage	VCC	2.7	3.3	3.6	V
Supply Voltage	VCCQ	1.7	1.8	1.95	V

Table.3 Temperature

Condition	Min	Max	Unit
Operation	-25	85	℃
Storage without Operation	-40	85	℃

NOTE:
The operating temperature is the eMMC case surface temperature on the center of top side of the case.

2.3 Logical Unit Information

Table.4 User Data Area Capacity

Device	LBA[Hex]	LBA[Dec]	Capacity[Bytes]
64GB	07480000h	122,159,104	62,545,461,248

Table.5 Capacity according to partition

Boot partition 1	Boot partition 2	RPMB
4096KB	4096KB	4096KB

Biwin Storage Technology CO., Ltd.

Preliminary

2.4 Performance

Table.6 Default performance

Capacity	Typical Sequential Read	Typical Sequential Write	Unit
64GB	325	255	MB/s

NOTE:

1. Test Condition : Bus width x8, HS400, 512KB data transfer, without file system overhead, measured on Biwin's internal board.
2. Table for reference only. Performance may vary according to platform.

2.5 Independent Technology

The eMMC V5.1 interface defines the communication protocol between host and eMMC device. It can not only manage wear leveling, bad block management and ECC, but also isolate host from advancing Nand flash technology. Nand flash memory, as main part of eMMC devices, is always rapidly changed to keep close tabs on generation shift. Thanks to this eMMC interface, the host can be independent of Nand flash change, which greatly accelerates product development and reduces time-to-market.

2.6 Error Detect and Management

Biwin eMMC incorporates advanced technology for error detect and management. If a defective block is identified, eMMC can completely replace the defective block with one of the spare blocks. This process is invisible to the host and generally does not affect data space allocated for the user.

Biwin Storage Technology CO.,Ltd.

Preliminary

3. SUPPORTED FEATURES

3.1 General Description

All communication between host and device is controlled by the host (master). The host sends commands, which result in a device response.

From eMMC4.51 to eMMC5.1, some new powerful functions are introduced, such as:

- HS400 ultra speed mode (Data Strobe Line)
- Production State Awareness function
- FFU function (Field Firmware Update)
- Sleep Notification in Power Off Notification
- Secure Removal Type
- Overshoot and undershoot
- Reference load for HS400
- RPMB address failure on Read operation

3.2 HS400 Bus Speed Mode

3.2.1 The HS400 mode features

Table.7 I/O Drive Strength Types

Driver Type Values	Support	Nominal Impedance	Approximated driving capability compared to Type0	Remark
0x0	Mandatory	50Ω	x1	Default Driver Type, supports up to 200MHz operation.
0x1	Optional	33Ω	×1.5	Supports up to 200MHz operation.
0x2		66Ω	×0.75	The weakest drive that supports up to 200MHz operation.
0x3		100Ω	×0.5	For low noise and low EMI systems. Maximal operating frequency is decided by Host design.
0x4		40Ω	×1.2	

NOTE:
Support of Driver Type-0 is mandatory for HS200 and HS400 device.

Biwin Storage Technology CO.,Ltd.

Preliminary

3.2.2 HS400 Device Input Timing

The CMD input timing for HS400 mode is the same as CMD input timing for HS200 mode.

The device input timing is shown in figure below.

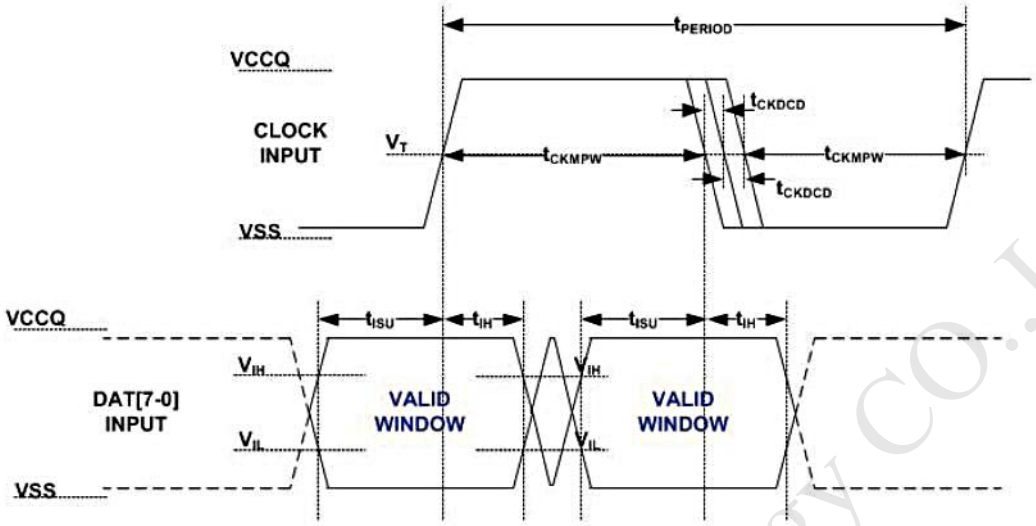

Figure.4 HS400 Device Data input timing

NOTE:

V_T = 50% of V_{CCQ}, indicates clock reference point for timing measurements.

Table.8 HS400 Device input timing

Parameter	Symbol	Min	Max	Unit	Remark
Input CLK					
Cycle time data transfer mode	t_{PERIOD}	5	-	-	200MHz(Max),between rising edges With respect to V_T.
Slew rate	SR	1.125	-	V/ns	With respect to V_{IH}/V_{IL}.
Duty cycle distortion	t_{CKDCD}	0.0	0.3	ns	Allowable deviation from an ideal 50% duty cycle. With respect to V_T. Includes jitter, phase, noise
Minimum pulse width	t_{CKMPW}	2.2	-	ns	With respect to V_T.
Input DAT (referenced to CLK)					
Input set-up time	t_{ISUddr}	0.4	-	ns	$C_{Device} \leq 6pF$ With respect to V_{IH}/V_{IL}.
Input hold time	t_{IHddr}	0.4	-	ns	$C_{Device} \leq 6pF$ With respect to V_{IH}/V_{IL}.
Slew rate	SR	1.125	-	V/ns	With respect to V_{IH}/V_{IL}.

Biwin Storage Technology CO.,Ltd.
Preliminary

3.2.3 HS400 Device Output Timing

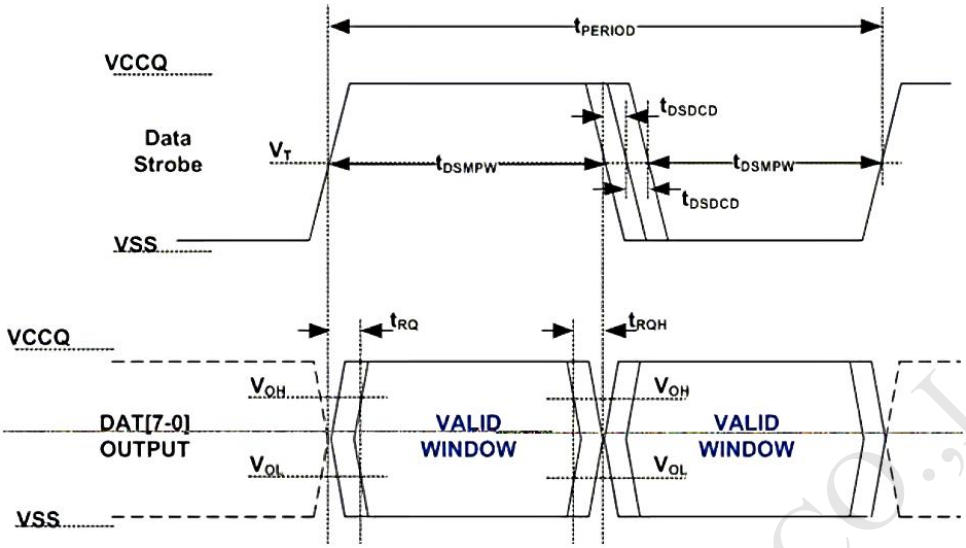

Figure.5 HS400 Device output timing

NOTE:

VT = 50% of VCCQ, indicates clock reference point for timing measurements.

Table.9 HS400 Device output timing

Parameter	Symbol	Min	Max	Unit	Remark
Data Strobe					
Cycle time data transfer mode	t_{PERIOD}	5	-	-	200MHz(Max),between rising edges With respect to V_T.
Slew rate	SR	1.125	-	V/ns	With respect to VOH/VOL and HS400 reference load.
Duty cycle distortion	t_{DSDCD}	0.0	0.2	ns	Allowable deviation from the input CLK duty cycle distortion (t_{CKDCD}). With respect to V_T. Includes jitter, phase
Minimum pulse width	t_{DSMPW}	2.0	-	ns	With respect to V_T.
Read pre-amble	t_{RPRE}	0.4	-	t_{PERIOD}	Max value is specified by manufacturer. Value up to infinite is valid
Read post-amble	t_{RPST}	0.4	-	t_{PERIOD}	Max value is specified by manufacturer. Value up to infinite is valid
Output DAT (referenced to Data Strobe)					
Output skew	t_{RQ}	-	0.4	ns	With respect to VOH/VOL and HS400 reference load
Output hold skew	t_{RQH}	-	0.4	ns	With respect to VOH/VOL and HS400 reference load.
Slew rate	SR	1.125	-	V/ns	With respect to VOH/VOL and HS400 reference load

Biwin Storage Technology CO.,Ltd.

Preliminary

3.2.4 HS400 Device Output Timing (cont'd)

Table.10 HS400 Capacitance and Resistors

Parameter	Symbol	Min	Max	Unit	Remark
Pull-up resistance for CMD	R_{CMD}	4.7	100	kΩ	Recommended maximum value is 30kΩ for 1.2V and 50kΩ for 1.8V interface supply voltages
Pull-up resistance for DAT[7:0]	R_{DAT}	10	100	kΩ	
Pull-down resistance for data strobe	R_{DS}	10	100	kΩ	
Internal pull-up resistance DAT[7:1]	R_{int}	10	150	kΩ	-
Single Device capacitance	C_{Device}	-	6	pF	-

NOTE:

Recommended maximum value is 30 kΩ for 1.2 V and 50 kΩ for 1.8 V interface supply voltages.

Biwin Storage Technology CO.,Ltd.

Preliminary

3.3 Additional Timing changes in HS400 mode

3.3.1 Write Timing

In HS400 mode, default Start Bit position is valid at rising edge. In addition, the host may stop CLK between data blocks or within a data block. The Data Strobe is used only in read operation. The Data Strobe is always High-Z (not driven by the device and pulled down by R_{DS}) or Driven Low in write operation, except during CRC status response.

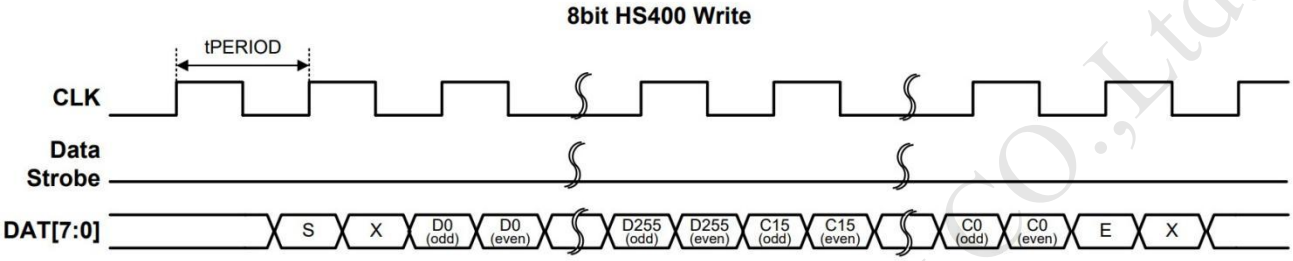

Figure.6 HS400 Write Timing with data block size of 512 bytes

3.3.2 Read Timing

The Data Strobe is toggled only during data valid period (Start bit, Data, CRC16, End bit, CRC status token). In HS400 mode, Start Bit position is valid at both rising and falling edge. In addition, the host may stop CLK between data blocks and not within a data block.

Data Strobe shall be driven t_{RPRE} prior to the first Data Strobe rising edge and t_{RPST} after the last falling edge.

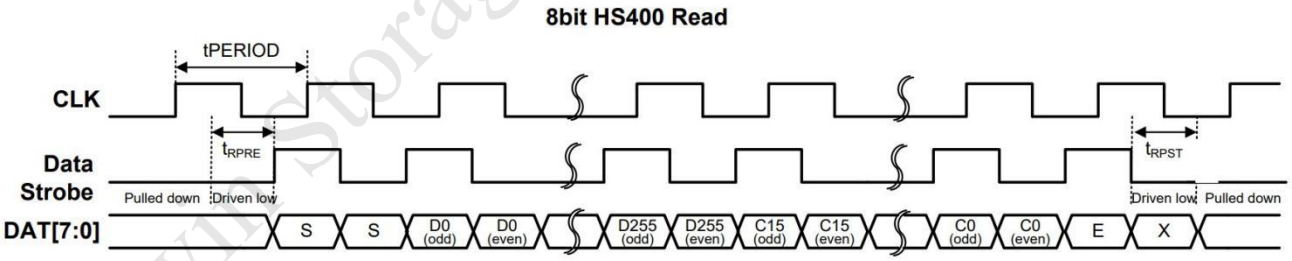

Figure.7 HS400 Read Timing with data block size of 512 bytes

3.4 Production State Awareness

eMMC device could utilize the information of whether it is in production environment and operate differently than it operates in the field.

For example, content that was loaded into the storage device prior to soldering might get corrupted, at higher probability, during device soldering. The eMMC device could use “special” internal

Preliminary
Biwin Storage Technology CO.,Ltd.

operations for loading content prior to device soldering that would reduce production failures and use "regular" operations postsoldering.

PRODUCTION_STATE_AWARENESS [133] field in extended CSD is used as a mechanism through which the host should report to the device whether it is pre or post soldering state.

This standard defines two methods, Manual Mode and Auto Mode, to manage the device production state.

The trigger for starting or re-starting the process is setting correctly PRE_LOADING_DATA_SIZE field. Before setting this field the host is expected to make sure that the device is clean and any data that was written before to the device is expected to be erased using CMD35, CMD36 and CMD38.

In case the host erased data, overrode existing data or performed re-partition during production state awareness it should restart the production state awareness process by re-setting PRE_LOADING_DATA_SIZE.

3.5 Field Firmware Update (FFU)

Field Firmware Updates (FFU) enables features enhancement in the field. Using this mechanism the host downloads a new version of the firmware to the eMMC device and, following a successful download, instructs the eMMC device to install the new downloaded firmware into the device.

In order to start the FFU process the host first checks if the eMMC device supports FFU capabilities by reading SUPPORTED_MODES and FW_CONFIG fields in the EXT_CSD. If the eMMC device supports the FFU feature the host may start the FFU process. The FFU process starts by switching to FFU Mode in MODE_CONFIG field in the EXT_CSD. In FFU Mode host should use closed-ended or open ended commands (CMD17/CMD18/CMD24/CMD25) for downloading the new firmware and reading vendor proprietary data. In this mode, the host should set the argument of these commands to be as defined in FFU_ARG field. In case these commands have a different argument the device behavior is not defined and the FFU process may fail.

The host should set Block Length to be DATA_SECTOR_SIZE. Downloaded firmware bundle must be DATA_SECTOR_SIZE size aligned (internal padding of the bundle might be required).

Once in FFU Mode the host may send the new firmware bundle to the device using one or more write commands.

The host could regain regular functionally of write and read commands by setting MODE_CONFIG field in the EXT_CSD back to Normal state. Switching out of FFU Mode may abort the firmware download operation. When switched back-in to FFU Mode, the host should check the FFU Status to get indication about the number of sectors that were downloaded successfully by reading the NUMBER_OF_FW_SECTORS_CORRECTLY_PROGRAMMED in the extended CSD. In case the number of sectors that were downloaded successfully is zero the host should re-start downloading the

Biwin Storage Technology CO.,Ltd
Preliminary

new firmware bundle from its first sector. In case the number of sectors that were downloaded successfully is positive the host should continue the download from the next sector, that would resume the firmware download operation.

3.6 Secure Removal Type

This field indicates that how information is removed from the physical memory during a Purge operation.

The first 4bits (Bit0~Bit3) indicate the capability of the eMMC device. The next two bits indicate configurable option. It can be set once during system integration by host.

Table.11 Secure Removal Type

Bit 7	Bit 6	Bit 5	Bit 4	Bit 3	Bit 2	Bit 2	Bit 0
Reserved		Configure Secure Removal Type		Supported Secure Removal Type			
		R/W		R			

Supported Secure Removal Type

Bit [7:6]: Reserved

Bit [5:4]: Configure Secure Removal Type

0x0: information removed by an erase of the physical memory

0x1: information removed by an overwriting the addressed locations with a character f ollowed by an erase

0x2: information removed by an overwriting the addressed locations with a character, its complement, then a random character

0x3: information removed using a vendor defined

Bit [3:0]: Supported Secure Removal Type

Bit 0: information removed by an erase of the physical memory

Bit 1: information removed by an overwriting the addressed locations with a character followed by an erase

Bit 2: information removed by an overwriting the addressed locations with a character, its complement, then a random character

Bit 3: Information removed using a vendor defined

Biwin Storage Technology Co.,Ltd.

Preliminary

3.7 Overshoot/Undershoot Specification

Parameter	VCCQ (1.70V-1.95V)	Unit
Maximum peak amplitude allowed for overshoot area.	0.9	V
Maximum peak amplitude allowed for undershoot area.	0.9	V
Maximum area above VCCQ	1.5	V-ns
Maximum area below VSSQ	1.5	V-ns

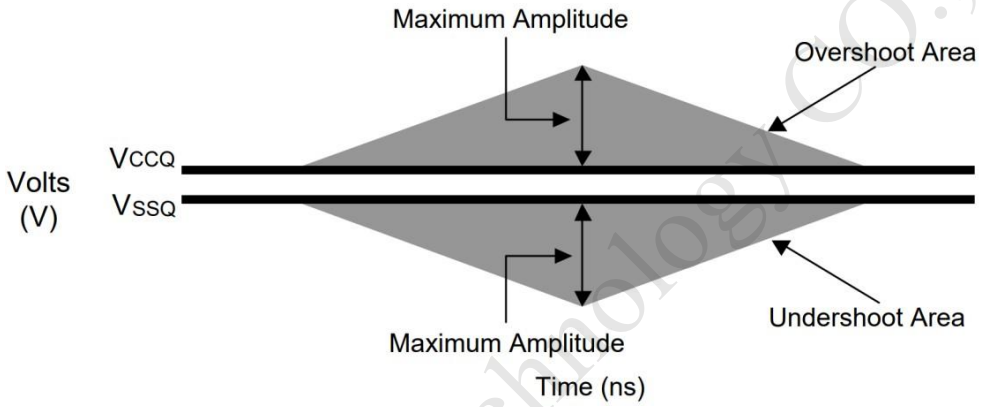

Figure.8 Overshoot/undershoot definition

Biwin Storage Technology CO.,Ltd.

Preliminary

3.8 HS400 Reference Load

The circuit in Figure 9 shows the reference load used to define the HS400 Device Output Timings and overshoot / undershoot parameters.

The reference load is made up by the transmission line and the CREFERENCE capacitance.

The reference load is not intended to be a precise representation of the typical system environment nor a depiction of the actual load presented by a production tester.

System designers should use IBIS or other simulation tools to correlate the reference load to system environment. Manufacturers should correlate to their production test conditions.

Delay time (td) of the transmission line has been introduced to make the reference load independent from the PCB technology and trace length.

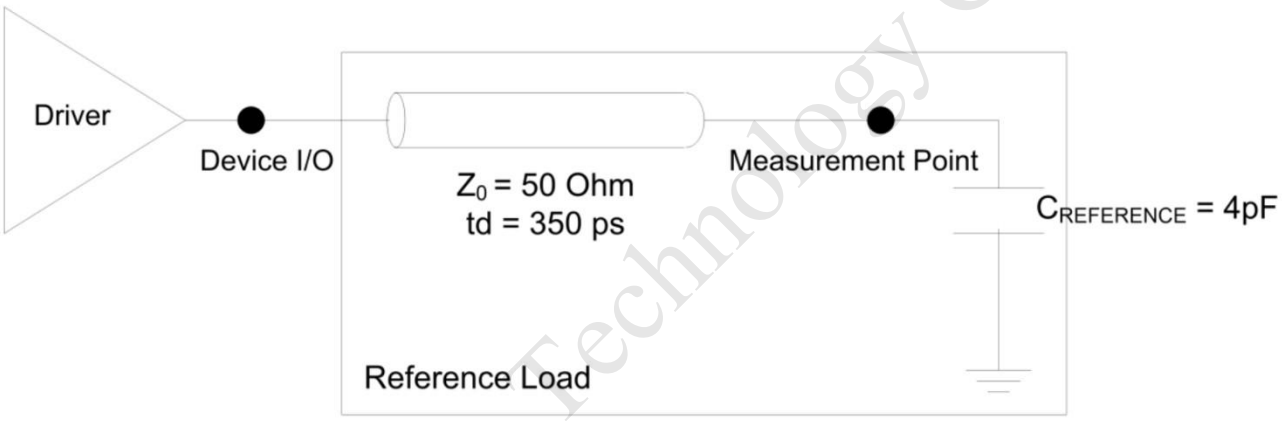

Figure.9 HS400 reference load

3.9 RPMB Throughput Improvement

Related parameter register in EXT_CSD : WR_REL_PARAM [166]

Name	Field	Bit	Type
Enhanced RPMB Reliable Write	EN_RPMB_REL_WR	4	R

Bit[4]: EN_RPMB_REL_WR(R)

0x0: RPMB transfer size is either 256B (single 512B frame) or 512B (Two 512B frame).

0x1: RPMB transfer size is either 256B (single 512B frame), 512B (Two 512B frame), or 8KB(Thirthy two 512B frames).

Biwin Storage Technology CO.,Ltd.
Preliminary

4. DC PARAMETERS

4.1 Power Consumption

Table.12 Power Consumption

Parameter	Min	Typ	Max	Unit	Remark
Supply voltage for high voltage range	2.7	3.3	3.6	V	-
Supply voltage for low voltage range	1.7	1.8	1.95	V	-
Supply voltage for core	0.99	1.1	1.21	V	-
I/O input leakage current	-10	-	10	uA	-
I/O output leakage current	-10	-	10	uA	-
Programmable pull-up resistor	28	40	52	KΩ	VCCQ = 3.3V
Programmable pull-down resistor	28	40	52	KΩ	VCCQ = 3.3V
Programmable pull-up resistor	55	80	105	KΩ	VCCQ = 1.8V
Programmable pull-down resistor	55	80	105	KΩ	VCCQ = 1.8V
Operating temperature	-25	+25	+85	°C	-

4.2 Power Requirement

Table.13 Idle Current

Density	Icc 3.3V	Iccq 1.8V	Unit
64GB	100	100	μA

Table.14 Active Power Consumption during operation

Density	Icc 3.3V	Iccq 1.8V	Unit
64GB	55	110	mA

NOTE:

1. Power Measurement conditions: Clean state,Bus width x8 w/ hs400, VCC =3.3V, VCCQ = 1.8V, TA=25°C.
2. The measurement for max RMS current is the average RMS current consumption over a period of 100ms.

Biwin Storage Technology CO.,Ltd.

Preliminary

5. REGISTER VALUES

Within the eMMC interface six registers are defined: OCR, CID, CSD, EXT_CSD, RCA and DSR. These registers can only be accessed by corresponding commands. The OCR, CID and CSD registers carry the eMMC specific information, while the RCA and DSR registers are configuration registers storing actual configuration parameters. The EXT_CSD register carries both eMMC specific information and actual configuration parameters.

5.1 OCR Register

The 32-bit operation conditions register stores the VCCQ voltage profile of the eMMC. In addition, the register contains a status information bit. This status bit is set if the eMMC power up procedure has been finished. The OCR register shall be implemented by eMMC.

Table.15 OCR Register Value

OCR bit	Description	eMMC
[6:0]	Reserved	000 0000b
[7]	1.7-1.95	1b
[14:8]	2.0-2.6	000 0000b
[23:15]	2.7-3.6	1 1111 1111b
[28:24]	Reserved	0 0000b
[30:29]	Access Mode	00b (byte mode)
		10b (sector mode)
[31]	Power up status bit(busy)[1]	

NOTE:

1. This bit is set to low if the eMMC has not finished the power up routine.

Biwin Storage Technology CO.,Ltd.

Preliminary

5.2 CID Register

Table.16 CID Register Value

Name	Field	Width	CID-slice	CID Value	Note
Manufacturer ID	MID	8	[127:120]	0xAB	BIWIN Manufacture ID
Reserved	-	6	[119:114]	-	-
Device/BGA	CBX	2	[113:112]	0x01	-
OEM/Application ID	OID	8	[111:104]	0x22	-
Product name	PNM	48	[103:56]	0x4C3032313158	L0211X
Product revision	PRV	8	[55:48]	-	-
Product serial number	PSN	32	[47:16]	random number	-
Manufacturing date	MDT	8	[15:8]	Year Month	-
CRC7 checksum	CRC	7	[7:1]	-	-
not used, always '1'	-	1	[0:0]	-	-

5.3 CSD Register

The Device-Specific Data (CSD) register provides information on how to access the Device contents. The CSD defines the data format, error correction type, maximum data access time, data transfer speed, whether the DSR register can be used etc. The programmable part of the register (entries marked by W or E below) can be changed by CMD27. The type of the CSD Registry entries below is coded as follows:

- R: Read only.
- W: One time programmable and not readable.
- R/W: One time programmable and readable.
- W/E: Multiple writable with value kept after power failure, H/W reset assertion and any CMD0 reset and not readable.
- R/W/E: Multiple writable with value kept after power failure, H/W reset assertion and any CMD0 reset and readable.\R/W/C_P: Writable after value cleared by power failure and H/W reset assertion (the value not cleared by CMD0 reset) and readable.
- R/W/E_P: Multiple writable with value reset after power failure, H/W reset assertion and any CMD0 reset and readable.
- W/E_P: Multiple writable with value reset after power failure, H/W reset assertion and any CMD0 reset and not readable.

Biwin Storage Technology CO.,Ltd.

Preliminary

Table.17 CSD Register Value

Name	Field	Width	Type	CSD-slice	CSD Value
CSD structure	CSD_STRUCTURE	2	R	[127:126]	3h
System specification version	SPEC_VERS	4	R	[125:122]	4h
Reserved	-	2	-	[121:120]	-
Data read access-time-1	TAAC	8	R	[119:112]	27h
Data read access-time-2 in CLK cycles (NSAC*100)	NSAC	8	R	[111:104]	1h
Max. bus clock frequency	TRAN_SPEED	8	R	[103:96]	32h
Device Command classes	CCC	12	R	[95:84]	8F5h
Max. read data block length	READ_BL_LEN	4	R	[83:80]	9h
Partial blocks for read allowed	READ_BL_PARTIAL	1	R	[79:79]	0h
Write block misalignment	WRITE_BLK_MISALIGN	1	R	[78:78]	0h
Read block misalignment	READ_BLK_MISALIGN	1	R	[77:77]	0h
DSR implemented	DSR_IMP	1	R	[76:76]	0h
Reserved	-	2	-	[75:74]	-
Device size	C_SIZE	12	R	[73:62]	FFFh
Max.read current @VDD min	VDD_R_CURR_MIN	3	R	[61:59]	7h
Max.read current @VDD max	VDD_R_CURR_MAX	3	R	[58:56]	7h
Max.write current @VDD min	VDD_W_CURR_MIN	3	R	[55:53]	7h
Max.write current @VDD max	VDD_W_CURR_MAX	3	R	[52:50]	7h
Device size multiplier	C_SIZE_MULT	3	R	[49:47]	7h
Erase group size	ERASE_GRP_EN	5	R	[46:42]	1Fh
Erase group size multiplier	ERASE _GRP_MULT	5	R	[41:37]	1Fh
Write protect group size	WP_GRP_SIZE	5	R	[36:32]	1Fh
Write protect group enable	WP_GRP_ENABLE	1	R	[31:31]	1h
Manufacturer default ECC	DEFAULT_ECC	2	R	[30:29]	0h
Write speed factor	R2W_FACTOR	3	R	[28:26]	2h
Max. write data block length	WRITE_BL_LEN	4	R	[25:22]	9h

Biwin Storage Technology CO.,Ltd.

Preliminary

Name	Field	Width	Type	CSD-slice	CSD Value
Partial blocks for write allowed	WRITE_BL_PARTIAL	1	R	[21:21]	0h
Reserved	-	4	-	[20:17]	-
Content protection application	CONTENT_PROT_APP	1	R	[16:16]	0h
File format group	FILE_FORMAT_GRP	1	R/W	[15:15]	0h
Copy flag(OTP)	COPY	1	R/W	[14:14]	1h
Permanent write protection	PERM_WRITE_PROTECT	1	R/W	[13:13]	0h
Temporary write protection	TMP_WRITE_PROTECT	1	R/W/E	[12:12]	0h
File format	FILE_FORMAT	2	R/W	[11:10]	0h
ECC code	ECC	2	R/W/E	[9:8]	0h
CRC	CRC	7	R/W/E	[7:1]	TBD
Not used, always'1'	-	1	-	[0:0]	TBD

5.4 Extended CSD Register

The Extended CSD register defines the Device properties and selected modes. It is 512 bytes long. The most significant 320 bytes are the Properties segment, that defines the Device capabilities and cannot be modified by the host. The lower 192 bytes are the Modes segment, that defines the configuration the Device is working in. These modes can be changed by the host by means of the SWITCH command. Multi bytes field is interpreted in little endian byte order.

- R: Read only.
- W: One time programmable and not readable.
- R/W: One time programmable and readable.
- W/E: Multiple writable with value kept after power failure, H/W reset assertion and any CMD0 reset and not readable.
- R/W/E: Multiple writable with value kept after power failure, H/W reset assertion and any CMD0 reset and readable.
- R/W/C_P: Writable after value cleared by power failure and H/W reset assertion (the value not cleared by CMD0 reset) and readable.
- R/W/E_P: Multiple writable with value reset after power failure, H/W reset assertion and any CMD0 reset and readable.
- W/E_P: Multiple writable with value reset after power failure, H/W reset assertion and any CMD0 reset and not readable

Biwin Storage Technology CO.,Ltd.

Preliminary

Table.18 Extended CSD Register Table

Name	Field	Width	Type	Slice	Value	Note
Reserved	-	6	-	[511:506]	-	-
Extended Security Commands Error	EXT_SECURITY_ ERR	1	R	[505]	0h	-
Supported command sets	S_CMD_SET	1	R	[504]	1h	-
HPI features	HPI_FEATURES	1	R	[503]	1h	-
Background operations support	BKOPS_SUPPORT	1	R	[502]	1h	BKOPS supported
Max packed read commands	MAX_PACKED_READS	1	R	[501]	20h	Max. 32 commands in a packed command
Max packed write commands	MAX_PACKED_WRITES	1	R	[500]	20h	
Data Tag Support	DATA_TAG_SUPPORT	1	R	[499]	1h	-
Tag Unit Size	TAG_UNIT_SIZE	1	R	[498]	0h	-
Tag Resources Size	TAG_RES_SIZE	1	R	[497]	0h	-
Context management capabilities	CONTEXT_ CAPABILITIES	1	R	[496]	78h	Max Tag Size = 8*2 =16MB; Max_Context ID = 8
Large Unit size	LARGE_UNIT_SIZE_M1	1	R	[495]	1h	1MB*2=2MB
Extended partitions attribute support	EXT_SUPPORT	1	R	[494]	3h	Support "System code"; Support "Non-persistent"
Support modes	SUPPORT_MODES	1	R	[493]	1h	FFU is Supported
FFU features	FFU_FEATURES	1	R	[492]	0h	-
Operation code time out	OPERATION_CODE_ TIMEOUT	1	R	[491]	17h	-
FFU Argument	FFU_ARG	4	R	[490:487]	FFFA FFF0h	-
Barrier support	BARRIER_SUPPORT	1	R	[486]	1h	-
Reserved	-	177	-	[485:309]	-	-
CMD Queuing Support	CMDQ_SUPPORT	1	R	[308]	1h	Support CMDQ
CMD Queuing Depth	CMDQ_DEPTH	1	R	[307]	1Fh	32

Biwin Storage Technology CO.,Ltd.
Preliminary

Name	Field	Width	Type	Slice	Value	Note
Reserved	-	1	-	[306]	-	-
Number of FW sectors correctly programmed	NUMBER_OF_FW_ SECTORS_CORRECTLY_ PROGRAMMED	4	R	[305:302]	0h	-
Vendor proprietary health report	VENDOR_PROPRIETARY _HEALTH_REPORT	32	R	[301:270]	0h	-
Device life time estimation type B	DEVICE_LIFE_TIME_EST _TYPE_B	1	R	[269]	1h	-
Device life time estimation type A	DEVICE_LIFE_TIME_EST _TYPE_A	1	R	[268]	1h	-
Pre EOL information	PRE_EOL_INFO	1	R	[267]	1h	-
Optimal read size	OPTIMAL_READ_SIZE	1	R	[266]	40h	-
Optimal write size	OPTIMAL_WRITE_SIZE	1	R	[265]	40h	-
Optimal trim unit size	OPTIMAL_TRIM_UNIT_ SIZE	1	R	[264]	7h	-
Device version	DEVICE_VERSION	2	R	[263:262]	TBD	-
Firmware version	FIREWARE_VERSION	8	R	[261:254]	TBD	Not same to PRV
Power class for 200MHz, DDR at VCC=3.6V	PWR_CL_DDR_200_360	1	R	[253]	0h	-
Cache size	CACHE_SIZE	4	R	[252:249]	400h	-
Generic CMD6 timeout	GENERIC_CMD6_TIME	1	R	[248]	5h	-
Power off notification (long) timeout	POWER_OFF_LONG_ TIME	1	R	[247]	64h	-
Background operations status	BKOPS_STATUS	1	R	[246]	0h	-
Number of Correctly programmed sectors	CORRECTLY_PRG_ SECTORS_NUM	4	R	[245:242]	0h	-
First initialization time after partitioning	INI_TIMEOUT_AP	1	R	[241]	Ah	-
Cache flushing policy	CACHE_FLUSH_POLICY	1	R	[240]	1h	-
Power class for 52MHz, DDR at Vcc=3.6V	PWR_CL_DDR_52_360	1	R	[239]	0h	-
Power class for 52MHz, DDR at 1.95V	PWR_CL_DDR_52_195	1	R	[238]	0h	-

Biwin Storage Technology CO.,Ltd.

Preliminary

Name	Field	Width	Type	Slice	Value	Note
Power class for 200MHz At Vccq=1.95V, Vcc=3.6V	PWR_CL_200_195	1	R	[237]	0h	-
Power class for 200MHz At Vccq=1.3V, Vcc=3.6V	PWR_CL_200_130	1	R	[236]	0h	-
Minimum write performance for 8 bit at 52MHz in DDR mode	MIN_PERF_DDR_W_8_52	1	R	[235]	0h	-
Minimum read performance for 8 bit at 52MHz in DDR mode	MIN_PERF_DDR_R_8_52	1	R	[234]	0h	-
Reserved	-	1	-	[233]	-	-
TRIM multiplier	TRIM_MULT	1	R	[232]	2h	-
Secure feature support	SEC_FEATURE _SUPPORT	1	R	[231]	55h	-
Secure erase multiple	SEC_ERASE_MULT	1	R	[230]	19h	-
Secure trim multiple	SEC_ERASE_MULT	1	R	[229]	Ah	-
Boot information	BOOT_INFO	1	R	[228]	7h	-
Reserved	-	1	-	[227]	-	-
Boot partition size	BOOT_SIZE_MULTI	1	R	[226]	20h	-
Access size	ACC_SIZE	1	R	[225]	6h	-
High-capacity erase unit size	HC_ERASE_GRP_SIZE	1	R	[224]	1h	-
High-capacity erase timeout	ERASE_TIMEOUT_MULT	1	R	[223]	2h	-
Reliable write sector count	REL_WR_SEC_C	1	R	[222]	1h	-
High-capacity write protect group size	HC_WP_GRP_SIZE	1	R	[221]	20h	-
Sleep current (VCC)	S_C_VCC	1	R	[220]	7h	-
Sleep current (VCCQ)	S_C_VCCQ	1	R	[219]	7h	-
Production state awareness timeout	PRODUCTION_STATE _AWARENESS_TIMEOUT	1	R	[218]	17h	-
Sleep/awake timeout	S_A_TIMEOUT	1	R	[217]	12h	-

Biwin Storage Technology CO.,Ltd.

Preliminary

Name	Field	Width	Type	Slice	Value	Note
Sleep Notification timeout	SLEEP_NOTIFICATION _TIME	1	R	[216]	Ch	-
Sector count	SEC_COUNT	4	R	[215:212]	07480 000h	64GB
Secure write protect information	SECURE_WP_INFC	1	R	[211]	1h	-
Minimum write performance for 8bit at 52MHz	MIN_PERF_W_8_52	1	-	[210]	0h	-
Minimum read performance for 8bit at 52MHz	MIN_PERF_R_8_52	1	R	[209]	0h	-
Minimum write performance for 8bit at 26MHz, for 4bit at 52MHz	MIN_PERF_W_8_26_4_52	1	R	[208]	0h	-
Minimum read performance for 8bit at 26MHz, for 4bit at 52MHz	MIN_PERF_R_8_26_4_52	1	R	[207]	0h	-
Minimum write performance for 8bit at 26MHz	MIN_PERF_W_4_26	1	R	[206]	0h	-
Minimum read performance for 8bit at 26MHz	MIN_PERF_R_4_26	1	R	[205]	0h	-
Reserved	-	1	-	[204]	-	-
Power class for 26MHz at 3.6V	PWR_CL_26_360	1	R	[203]	0h	-
Power class for 52MHz at 3.6V	PWR_CL_52_360	1	R	[202]	0h	-
Power class for 26MHz at 1.95V	PWR_CL_26_195	1	R	[201]	0h	-
Power class for 52MHz at 1.95V	PWR_CL_52_195	1	R	[200]	0h	-
Partition switching	PARTITION_SWITCH_ TIME	1	R	[199]	4h	-
Out-of-interrupt busy timing	OUT_OF_INTERRUPT_ TIME	1	R	[198]	Ah	-
I/O Driver Strength	DRIVER_STRENGTH	1	R	[197]	1Fh	-
Device type	DEVICE_TYPE	1	R	[196]	57h	-

Biwin Storage Technology CO.,Ltd.

Preliminary

Name	Field	Width	Type	Slice	Value	Note
Reserved	-	1	-	[195]	-	
CSD structure	CSD_STRUCTURE	1	R	[194]	2h	
Reserved	-	1	-	[193]	-	-
Extended CSD revision	EXT_CSD_REV	1	R	[192]	8h	-
Command set	CMD_SET	1	R/W/E_P	[191]	0h	-
Reserved	-	1	-	[190]	-	-
Command set revision	CMD_SET_REV	1	R	[189]	0h	-
Reserved	-	1	R	[188]	-	-
Power class	POWER_SUPPORT	1	R	[187]	0h	-
Reserved	-	1	-	[186]	-	-
High-speed interface timing	HS_TIMING	1	W/E_P	[185]	TBD	-
Strobe support	STROBE_SUPPORT	1	R	[184]	1h	-
Bus width mode	BUS_WIDTH	1	W/E_P	[183]	TBD	-
Reserved	-	1	-	[182]	-	-
Erased memory content	ERASED_MEM_CONT	1	R	[181]	0h	-
Reserved	-	1	-	[180]	-	-
Partition configuration	PARTITION _CONFIRATION	1	R/W/E R/W/E_P	[179]	0h	-
Boot configuration protection	BOOT_COMFIG_PROT	1	R/W R/W/C_P	[178]	0h	-
Boot bus condition	BOOT_BUS_CONDITION	1	R/W/E	[177]	0h	-
Reserved	-	1	-	[176]	-	-
High-density erase group definition	ERASE_GROUP_DEF	1	R/W/E	[175]	0h	-
Boot write protection status register	BOOT_WP_STATUS	1	R	[174]	0h	-
Boot area protection status register	BOOT_WP	1	R/W R/W/C_P	[173]	0h	-
Reserved	-	1	-	[172]	-	-

Biwin Storage Technology CO.,Ltd.

Preliminary

Name	Field	Width	Type	Slice	Value	Note
User area write protection register	USER_WP	1	R/W R/W/C_P R/W/E_P	[171]	0h	-
Reserved	-	1	-	[170]	-	-
FW configuration	FW_CONFIG	1	R/W	[169]	0h	-
RPMB size	RPMB_SIZE_MULT	1	R	[168]	20h	-
Write reliability setting register	WR_REL_PARAM	1	R/W	[167]	1Fh	-
Write parameter setting register	WR_REL_PARAM	1	R	[166]	15h	-
Start sanitize operation	SANITIZE_START	1	W/E_P	[165]	0h	-
Manually start background operations	BKOPS_START	1	W/E_P	[164]	0h	-
Enable background operations handshake	BKOPS_EN	1	R/W R/W/E	[163]	2h	-
H/W reset function	RST_ R_FUCTION	1	R/W	[162]	1h	-
HPI management	HPI_MGMT	1	R/W/E_P	[161]	0h	-
Partitioning Support	PARTITIONING _SUPPORT	1	R	[160]	1h	-
Max enhanced area size	MAX_ENH_SIZE_MULT	3	R	[159:157]	TBD	-
Partitions attribute	PARTITIONS _ATTRIBUTE	1	R/W	[156]	0h	-
Partitioning setting	PARTITION_SETTING	1	R/W	[155]	0h	-
General purpose partition size	GP_SIZE_MULT	12	R/W	[154:143]	0h	-
Enhanced user data area size	ENH_SIZE_MULT	3	R/W	[142:140]	0h	-
Enhanced user data start	ENH_START_ADDR	4	R	[139:136]	0h	-
Reserved	-	1	-	[135]	-	-
Secure bad block	SEC_BAD_BLK_MGMNT	1	R	[134]	0h	-
Production state awareness	PRODUCTION_STATE_ AWARENESS	1	R/W/E	[133]	0h	-

Biwin Storage Technology CO. Ltd.

Preliminary

Name	Field	Width	Type	Slice	Value	Note
Package Case temperature is control	TCASE_SUPPORT	1	W/E_P	[132]	0h	-
Periodic Wake-up	PERIODIC_WAKEUP	1	R	[131]	0h	-
Program CID/CSD in DDR mode support	PROGRAM_CID_CSD_ DDR_SUPPORT	1	R	[130]	0h	-
Reserved	-	2	-	[129:128]	-	-
Vendor Specific Fields	VENDOR_SPECIFIC_ FIELD	64	<vendor specific>	[127:64]	TBD	-
Native sector size	NATIVE_SECTOR_SIZE	1	R	[63]	0h	-
Sector size emulation	USE_NATIVE_SECTOR	1	R/W	[62]	0h	-
Sector size	DATA_SECTOR_SIZE	1	R	[61]	0h	-
1st initialization after	INI_TIMEOUT_EMU	1	R	[60]	Ah	-
Class 6 commands	CLASS_6_CTRL	1	R	[59]	0h	-
Number of addressed	DYNCAP_NEEDED	1	R	[58]	0h	-
Exception events control	EXCEPTION_EVENTS_ CTRL	2	R/W/E_P	[57:56]	0h	-
Exception events status	EXCEPTION_EVENTS_ST	2	R	[55:54]	0h	-
Extended Partitions attribute	EXT_PARTITIONS_ ATTRIBUTE	2	R/W	[53:52]	0h	-
Context configuration	CONTEXT_CONF	15	R/W/E_P	[51:37]	0h	-
Packed command status	PACKED_COMMAND_ST	1	R	[36]	0h	-
Packed command failure index	PACKED_FAILURE_ INDEX	1	R	[35]	0h	-
Power Off Notification	POWER_OFF_NOTIFICAT	1	R	[34]	0h	-
Control to turn the Cache ON/OFF	CACHE_CTRL	1	R/W/E_P	[33]	0h	-
Flushing of the cache	FLUSH_CACHE	1	W/E_P	[32]	0h	-
Control to turn the barrier ON/OFF	BARRIER_CTRL	1	R/W	[31]	0h	-
Mode config	MODE_CONFIG	1	R/W/E_P	[30]	0h	-
Mode operation codes	MODE_OPERATION _CODES	1	W/E_P	[29]	0h	-

Biwin Storage Technology CO.,Ltd.

Preliminary

Name	Field	Width	Type	Slice	Value	Note
Reserved	-	2	TBD	[28:27]	-	-
FFU status	FFU_STATUS	1	R	[26]	0h	-
Pre loading data size	PRE_LOADING_DATA _SIZE	4	R/W/E_P	[25:22]	0h	-
Max pre loading data size	MAX_PRE_LOADING _DATA_E	4	R	[21:18]	TBD	-
Product state awareness enablement	PRODUCT_STATE _AWARENESS _ENABLMENT	1	R R/W/E	[17]	1h	-
Secure removal type	SETURE_REMOVAL _TYPE	1	R R/E	[16]	3Bh	-
Command queue mode enable	CMDQ_MODE_EN	1	R/W/E_P	[15]	0h	-
Reserved	-	15	-	[14:0]	-	-

NOTE: Reversed bits should read as‘0’ .

5.5 RCA Register

The writable 16-bit relative device address register carries the device address assigned by the host during the device identification. This address is used for the addressing host device communication after the device identification procedure. The default value of the RCA register is 0x0001. The value 0x000 is reserved to set all devices into the stand-by status with CMD7.

5.6 DSR (Driver Stage Register)

The 16-bit driver stage register (DSR) is described in detail in 0. It can be optionally used to improve the bus performance for extended operating conditions (depending on parameters like bus length, transfer rate or number of device). The CSD register carries the information about the DSR register usage. The default value of the DSR register is 0x404.

Biwin Storage Technology CO.,Ltd.

Preliminary

6. DESIGN GUIDE FOR PCB LAYOUT

This appendix is just guideline for eMMC connection. The values in the below Schematic can be changed depending on the system environment.

Coupling capacitor should be connected with VDDi and VSS as closely as possible. VDDi capacitor is min 0.1uF.

If host does not use H/W reset, it is not needed to put 10K pull-up resistance on H/W rest line. It is recommended to separate VCCQ and VCC power.

The below connection guide is an example for customers to adopt eMMC more easily.

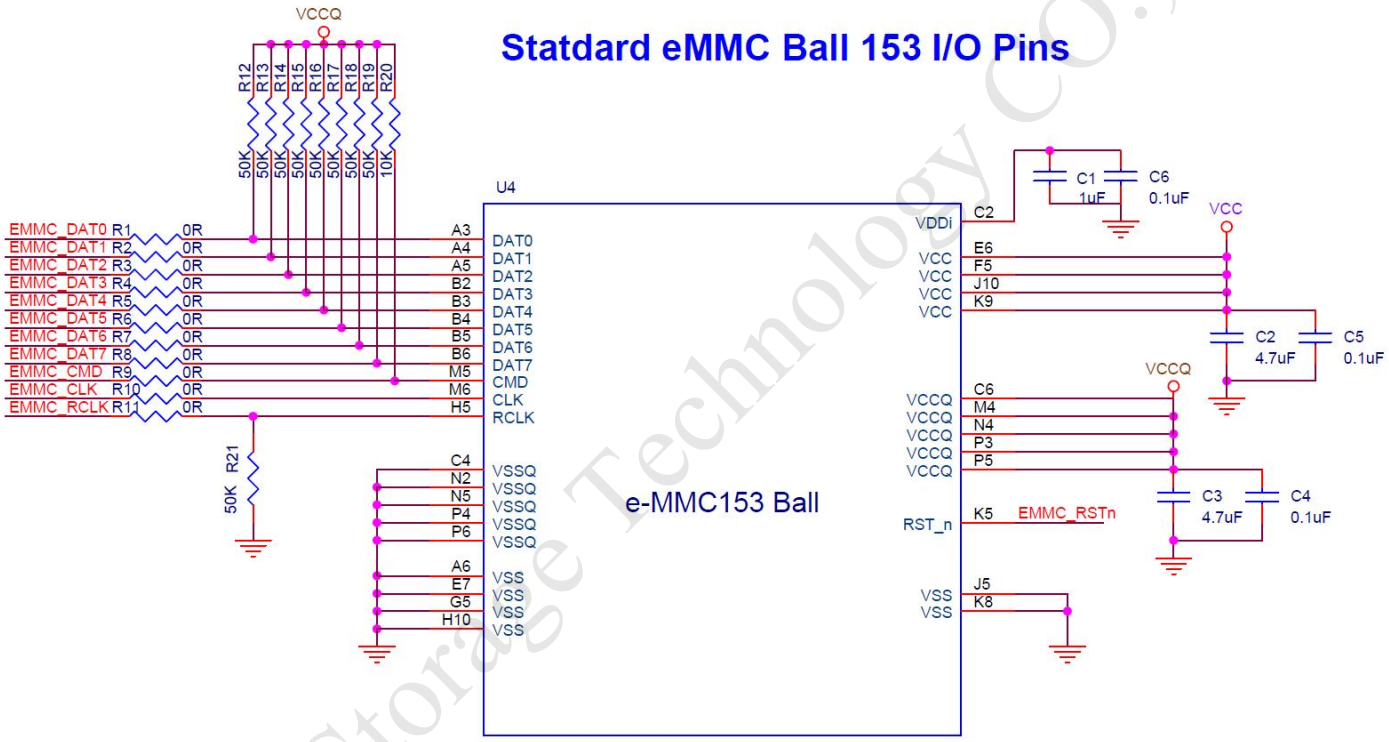

Figure10. schematic diagram of product marking

Biwin Storage Technology CO.,Ltd.

Preliminary

7. MARKING

First Row: Simplified BIWIN Logo

Second Row: Product Logo

Third Row: Sales Item P/N

Fourth Row: Date Code + LOT No. + Serial Number + Flash Code

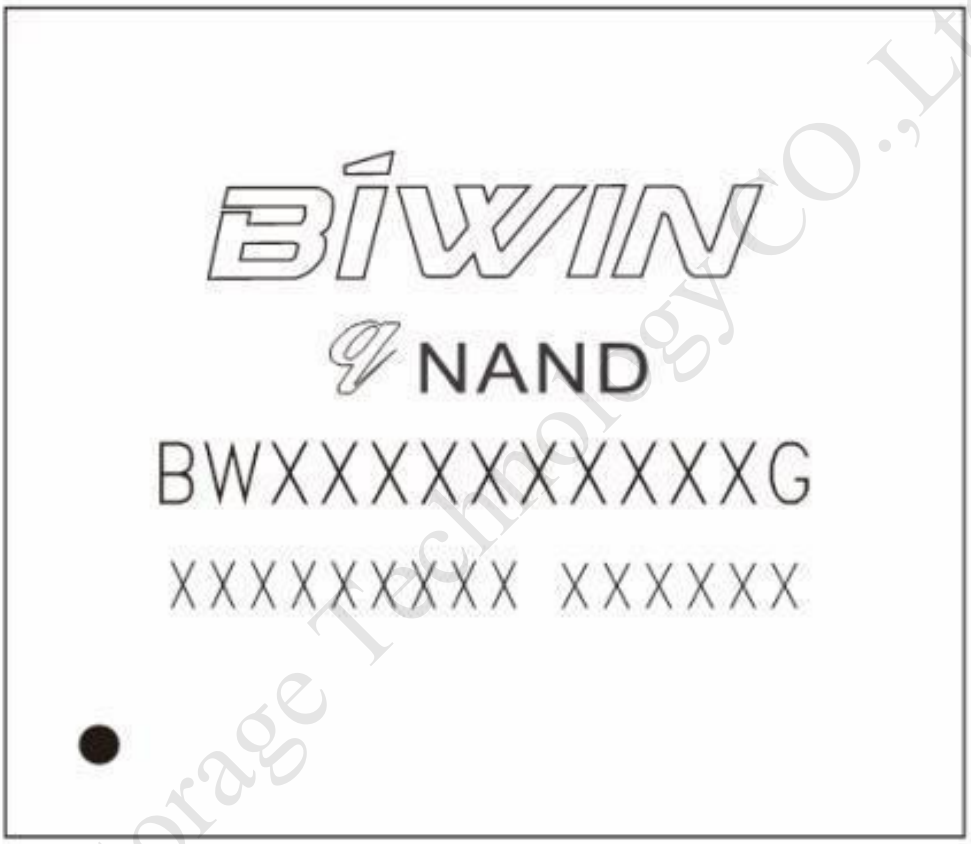

Figure.11 schematic diagram of product marking

Biwin Storage Technology CO.,Ltd.

Preliminary