GENERAL DESCRIPTION

MX1218AS is a high performance current mode PWM power circuit, it combines a dedicated PWM controller with a high voltage power MOSFET. It is optimized for high performance, low standby power, and cost effective off-line flyback converter applications.

MX1218AS offers comprehensive protection coverage with auto-recovery including Cycle-by-Cycle current limiting (OCP), over load protection (OLP), Output diode short circuit protection, VDD under voltage lockout (UVLO), internal over temperature protection (OTP). Excellent EMI performance is achieved with MAXIN proprietary frequency shuffling technique.

The tone energy at below 22KHz is minimized in the design and audio noise is eliminated during operation.

MX1218AS is offered in SOP-8 package.

Applications

Offline AC/DC flyback converter

PD charger

Wide output range adapter

FEATURES

- Low VDD startup current and low operating current
- Very wide range of VDD supply voltage
- Standby power < 75mW
- Power on soft start reducing MOSFET VDS stress
- Frequency shuffling for EMI
- Extended burst mode control for improved efficiency and minimum standby power design
- Fixed 65KHZ (typical) switching frequency
- Internal synchronized slope compensation
- Leading edge blanking on current sense input
- Comprehensive protection coverage
  - VDD Under Voltage Lockout with hysteresis (UVLO)
  - VDD Over Voltage Protection (VDD OVP)
  - Cycle-by-cycle over current protection
  - Over Load Protection (OLP) with auto-recovery
  - Output diode short protection with auto-recovery

Typical Application

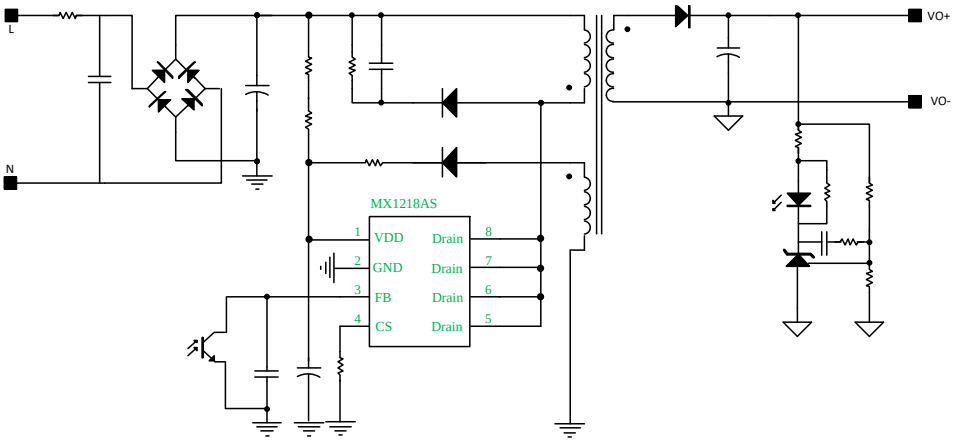

General information

Ordering information

Part Number	Description
MX1218AS	SOP8，Halogen-free，RoHS

Package dissipation rating

Package	RθJA（℃/W）
SOP8	90

Note: Drain Pin Connected to 200mm^2 PCB copper clad.

Absolute maximum ratings

Parameter	Value
Drain Voltage (off state)	700V
VDD Voltage	60 V
FB Input Voltage	-0.3 to 7V
CS Input Voltage	-0.3 to 7V
Min/Max Operating Junction Temperature TJ	-40 to 150℃
Min/Max Storage Temperature T_{STG}	-55 to 150℃
Lead Temperature (Soldering, 10secs)	260℃

Note: stresses beyond those listed under “absolute maximum ratings” may cause permanent damage to the device. These are stress ratings only, functional operation of the device at these or any other conditions beyond those indicated under “recommended operating conditions” is not implied. Exposure to absolute maximum rated conditions for extended periods may affect device reliability.

Recommended operating condition

Symbol	Parameter	Range
VDD	VDD supply voltage	9-48V
PD	Power dissipation @TA=25℃	1.1W
Output power	Quick charger or adapter	26W

Terminal assignments

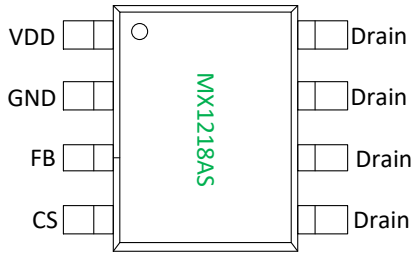

PIN NO.	PIN name	Description
1	**VDD**	Power supply.
2	**GND**	Ground pin.
3	**FB**	Feedback input pin. The PWM duty cycle is determined by voltage level into this pin and current-sense signal CS pin.
4	**CS**	Current sense pin, connect resistors to ground external for cycle-by-cycle current limiting.
5、6、7、8	**Drain**	The Drain of the internal power MOSFET, connect the primary winding of transformer.

Marking information

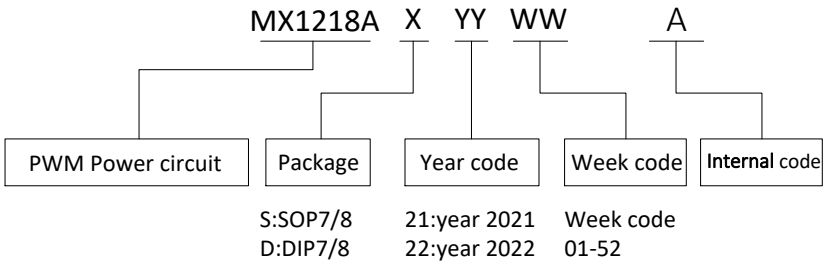

Block Diagram

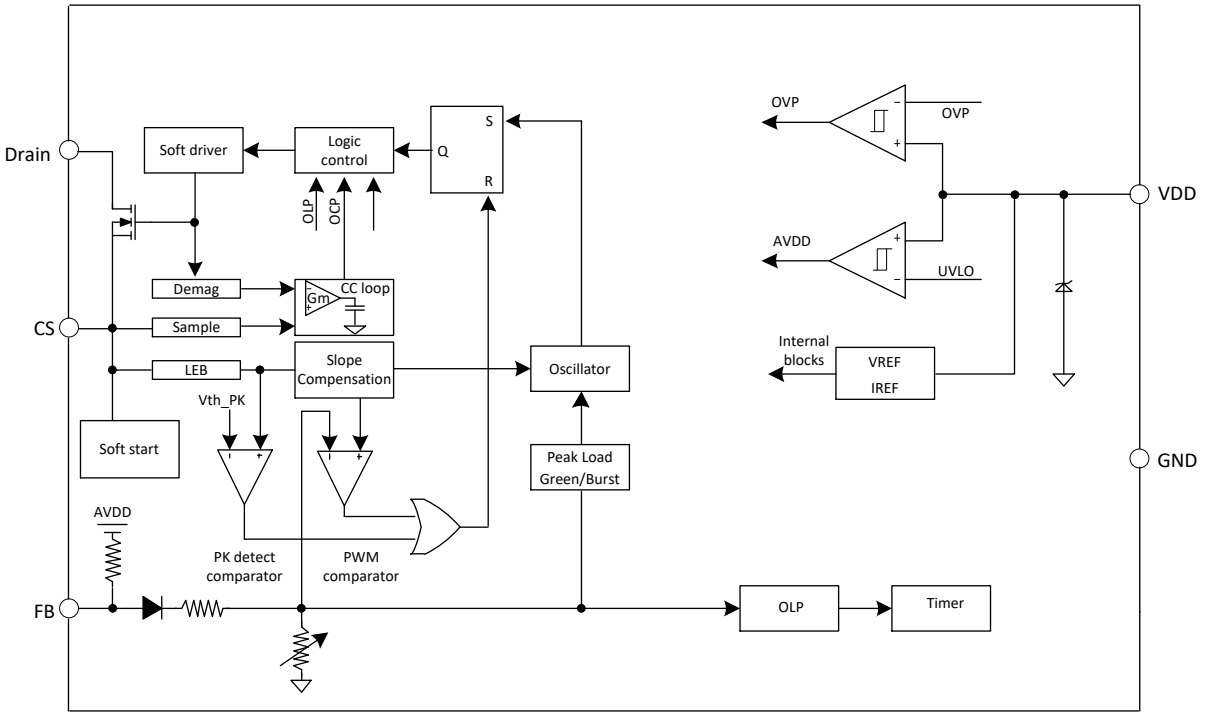

Electrical characteristics

（TA=25℃，VDD=18V，unless otherwise noted）

Symbol	Parameter	Test condition	Min	Typ.	Max	Unit
VDD supply voltage						
I startup	VDD startup current	VDD=UVLO_OFF-1V		2.0	10.0	μA
I_VDD	VDD normal operation current	VDD=18V, CS=0V, FB=2.5V		2	3	mA
I_ Burst	Burst mode operation current	VDD=18V, CS=0V, FB=0.5V		0.3	0.5	mA
UVLO_ON	VDD under voltage lockout enter	CS=3.3V，VDD step down	6.7	7.2	7.7	V
UVLO_OFF	VDD under voltage lockout exit	CS=3.3V，VDD step up	15.5	16.5	17.5	V
VDD_OVP	Over voltage protection voltage	FB=3V, CS=0V，VDD step up	50.0	52.0	54.0	V
V_Latch	Latch release voltage	External OTP/ VDD_OVP/ VO_OVP		4.8		V
T_recovery	Restart time for auto-recovery protection			1.4		s
FB pin – Feedback input section						
V_{FB_Open}	FB open loop voltage			5.1		V
Avcs	PWM input gain ΔVFB/ΔVCS			3.3		V/V
D_MAX	Max duty cycle	VDD=18V, VFB=3V, VCS=0.3V	70		90	%
I_{FB_short}	FB pin short circuit current	Current for short FB to GND		0.25		mA
V_{FB_green}	The threshold enters green mode	VDD=18V, CS=0V, FB step down		2.05		V
$V_{REF_burst_H}$	The threshold exits burst mode	VDD=18V, CS=0V, FB step up		1.2		V
$V_{REF_burst_L}$	The threshold enters burst mode	VDD=18V, CS=0V, FB step down		1.1		V
V_{TH_OLP}	Over load protection threshold		4.0	4.4	4.8	V
T_{D_OLP}	Open loop protection debounce time			60		ms
R_{FB_IN}	FB input impedance			20		kΩ
CS pin – Current sense input						
T_{CS_SST}	Soft start time of CS threshold			4.0		ms
T_blanking	Leading edge blanking time			300		ns
T_{D_OC}	Over current detection and delay	From over current occurs till gate driver turns off		90		ns
V_{CS_PK}	Internal current limiting threshold voltage with zero duty cycle		0.492	0.500	0.508	V
$V_{CS_PKclamp}$	CS voltage clamper			0.715		V
V_{CS_SRST}	Second rectifier diode short protection threshold voltage		1.1	1.2	1.3	V
Oscillator						
F_{OSC_NOM}	Normal frequency of high output voltage	VDD=18V, FB=2.5V		65		kHz
F_{OSC_JT}	Frequency jittering		-7		+7	%
$F_{OSC_shuffling}$	Shuffling frequency			240		Hz
F_{OSC_TEMP}	Frequency temperature stability			1.0		%
F_{OSC_VDD}	Frequency VDD voltage stability			1.0		%
F_{OSC_burst}	Burst mode frequency			22		kHz

GATE Driver						
V_{GL}	Gate low voltage	VDD=18V, Io=20mA			1.0	V
V_{GH}	Gate high voltage	VDD=18V, Io=20mA	8.0			V
$V_{G_clamping}$	Gate clamp voltage	VDD=18V		11.5		V
MOSFET						
RDS_ON	Static Drain to Source on resistance			0.82	0.9	Ω
VDS	Drain to Source breakdown voltage		700			V
Internal OTP						
OTP_in				150		℃
OTP_out				120		℃

Characteristic plots

VDD=18V

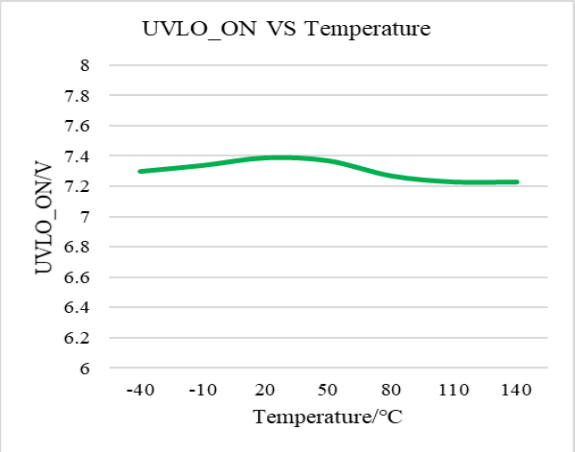

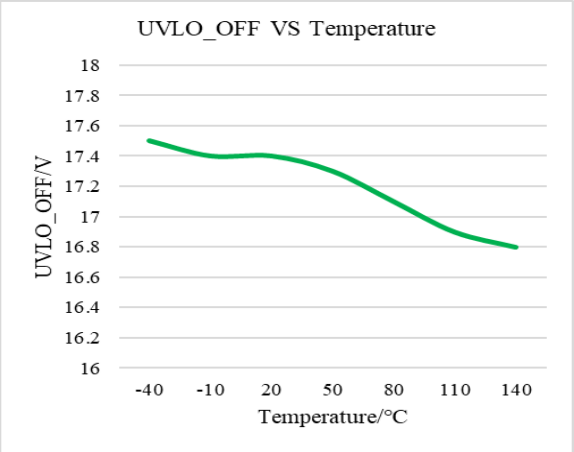

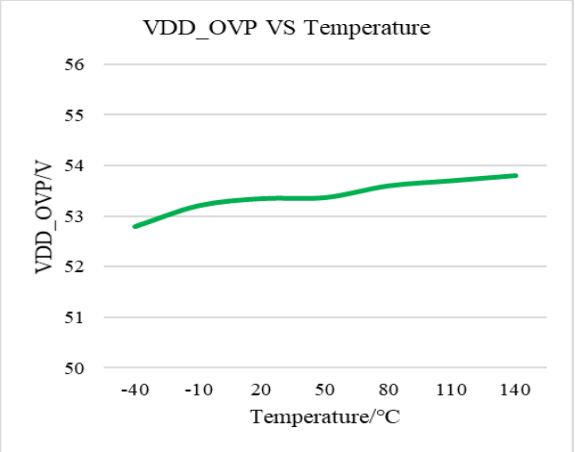

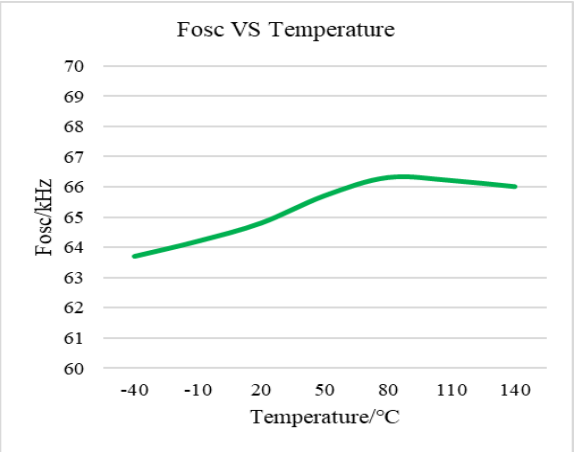

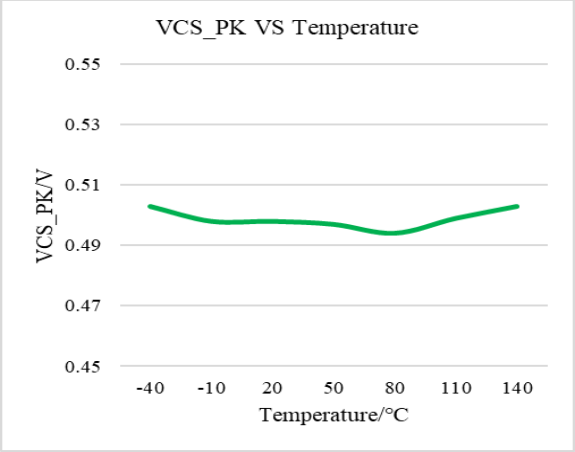

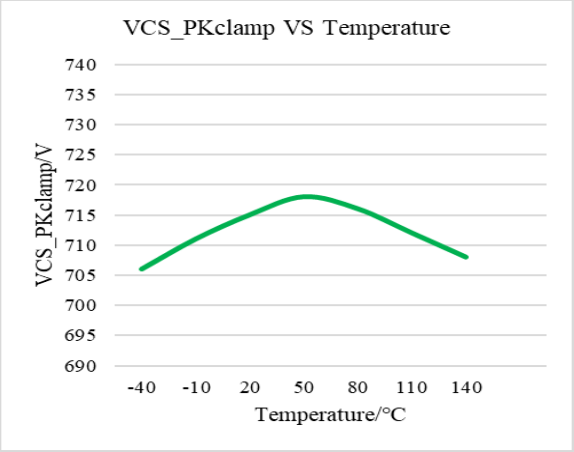

Operation description

MX1218AS is a high performance current mode PWM power circuit for low standby power and cost effective charger and adapter applications. MX1218AS is combined a high voltage power MOSFET and current mode PWM control IC. The 'extended burst mode' control greatly reduces the standby power consumption and helps the design easier to meet the international power conservation requirements.

Startup current and operation current

The VDD voltage of MX1218AS could be charged up to UVLO_OFF threshold level and device starts up quickly as the startup current is designed to be very low. A large value startup resistor can therefore be used to minimize the power loss yet achieve a reliable startup in application.

To optimize power efficiency, startup resistors can be added to the AC line, which not only can reduce power loss but can reset latched mode protections faster.

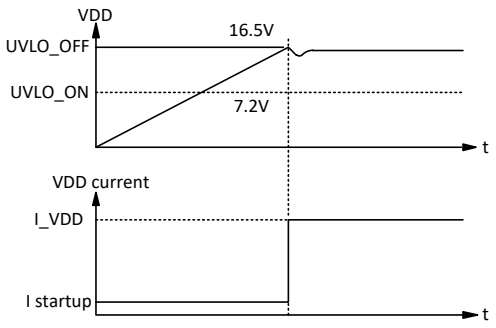

Fig1 startup current timing

The typical operating current of MX1218AS is 2mA (typical). Good efficiency is achieved with this low operating current together with the extended burst mode control features.

Soft start

MX1218AS features an internal 4.0ms(typical) soft start to soften the electrical stress occurring in the power supply during startup. It is activated during the power in sequence. As soon as VDD reaches UVLO_OFF, the CS peak voltage is gradually increased from 0.05V to the maximum level. Every restart up begins with a soft start.

Frequency shuffling for EMI improvement

The frequency shuffling is implemented in MX1218AS. The oscillation frequency is modulated so that the tone energy is spread out. The spread spectrum minimizes the system design.

Extended burst mode operation

At light load or no-load condition, most of the power dissipation in a switching mode power supply is from switching loss of the MOSFET, the core loss of the transformer and the loss of the snubber circuit. The magnitude of power loss is in proportion to the switching frequency. Lower switching frequency leads to the reduction on the power loss and thus conserves the energy.

The switching frequency is internally adjusted at light load or no-load condition. The switching frequency reduces at light load or no load to improve the conversion efficiency. At light load or no-load condition, the FB input drops below VREF_burst_L and system enters burst mode. The gate drive output switches when FB input rise back to VREF_burst_H. Otherwise the gate drive remains at off state to minimize the switching loss and reduces the standby power consumption to the greatest extend.

The switching frequency control also eliminates the audio noise at any loading conditions.

Oscillator operation

During the full load power operation, MX1210 operates at 65kHz fixed frequency of high output voltage （V_{FB}>2.05V typical）. The efficiency and system cost are controlled at an optimal level. At light load, MX1210 enters the light load mode, where the output current is reduced. The switching losses are reduced by lowering the switching frequency.

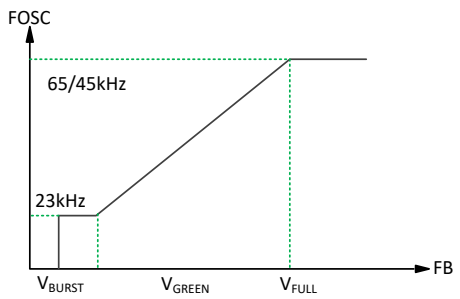

Fig2 FB voltage vs frequency

Current sensing and leading-edge blanking

Cycle by cycle current limiting is offered in MX1218AS current mode PWM control. The switch current is detected by a sense resistor into CS pin. At internal leading-edge blanking circuit chops off the sensed voltage spike at initial internal power MOSFET on state due to snubber diode

reverse recovery and surge gate current of internal power MOSFET so that the external RC filtering on sense input is no longer needed. The current limiting comparator is disabled and cannot turn off the internal power MOSFET during the blanking period. The PWM duty cycle is determined by the current sense input voltage and the FB input voltage.

Internal synchronized slope compensation

Built-in slope compensation circuit adds voltage ramp into the current sense input voltage for PWM generation. This greatly improves the close loop stability at CCM and prevents the sub-harmonic oscillation and thus reduces the output ripple voltage.

Driver

The power MOSFET is driven by a dedicated gate driver for power switch control. Too weak the gate driver strength results in higher conduction and switch loss of MOSFET while too strong gate driver strength results the compromise of EMI.

A good tradeoff is achieved through the built-in totem pole gate design with right output strength and dead time control. The low idle loss and good EMI system design is easier to achieve with this dedicated control scheme.

Protection controls

Good power supply system reliability is achieved with auto recovery protection features including OCP, Under Voltage Lockout on VDD (UVLO) and over load protection, and latched shutdown features including VDD over voltage protection and output Over Voltage Protection (OVP).

With MAXIN proprietary technology, the OCP is line voltage compensated to achieve constant output OCP limit over the universal input voltage range and its dependency on primary inductance and frequency is removed.

At overload condition when FB pin input voltage exceeds power limit threshold value for more than T_{D_OLP}, control circuit reacts to shut down the converter. It restarts when VDD voltage drops below UVLO limit.

When second rectifier diode shorted circuit, the voltage of current sense will be greater than 1.2V(typical), and then the internal MOSFET will be turn off, and the second rectifier diode short circuit protection can be achieved.

Package information

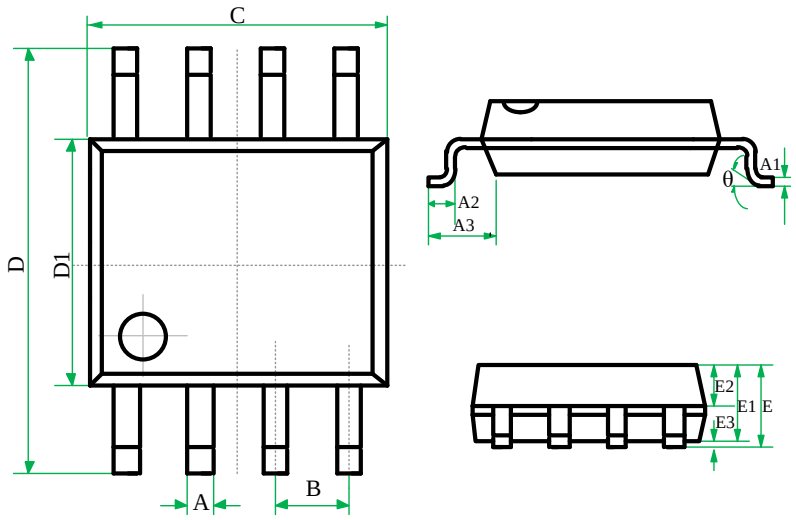

SYMBOL	MILLIMETERS			INCHES		
	MIN	NOM	MAX	MIN	NOM	MAX
A	0.39	-	0.48	0.0154	-	0.0189
A1	0.21	-	0.28	0.008	-	0.011
A2	0.50	-	0.80	0.020	-	0.031
A3	1.05BSC			0.041BSC		
B	1.27BSC			0.050BSC		
C	4.70	4.90	5.10	0.185	0.193	0.201
D	5.80	6.00	6.20	0.228	0.236	0.244
D1	3.70	3.90	4.10	0.146	0.154	0.161
E	-	-	1.75	-	-	0.069
E1	1.30	1.40	1.50	0.051	0.055	0.059
E2	0.60	0.65	0.70	0.024	0.026	0.028
E3	0.10	-	0.225	0.004	-	0.009
θ	0	-	8°	0	-	8°

SOP8 for MX1218AS

Restrictions on Product Use

- MAXIN micro is continually working to improve the quality and reliability of its products. Nevertheless, semiconductor devices in general can malfunction or fail due to their inherent electrical sensitivity and vulnerability to physical stress. It is the responsibility of the buyer, when utilizing MAXIN products, to comply with the standards of safety in making a safe design for the entire system, and to avoid situations in which a malfunction or failure of such MAXIN products could cause loss of human life, bodily injury or damage to property.
- In developing your designs, please ensure that MAXIN products are used within specified operating ranges as set forth in the most recent MAXIN products specifications.
- The information contained herein is subject to change without notice.

Version update information

V10 preliminary version

V11 Update marking information