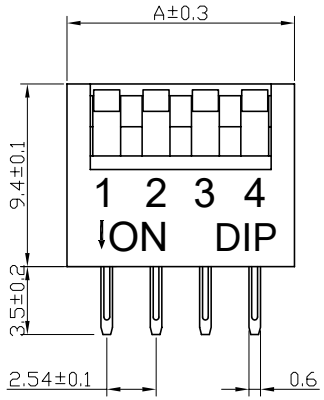


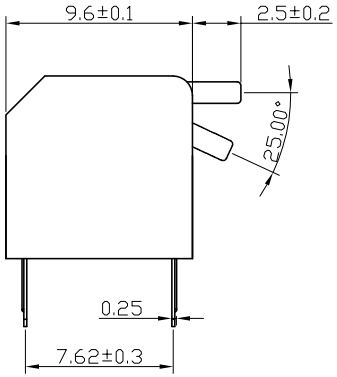


长柄（L）

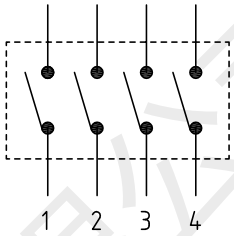


电路图

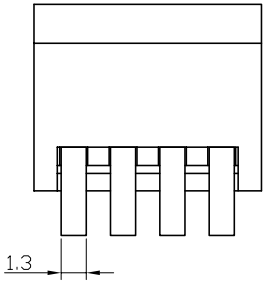


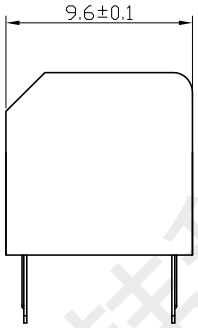


隐藏短柄（R）

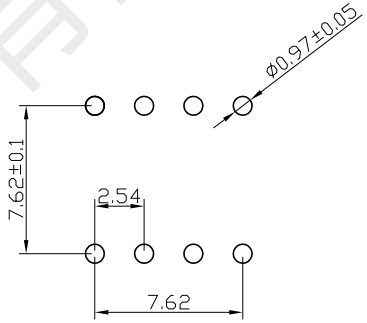


PCB开孔

| 位数 | 尺寸A (mm) |
|---|---|
| 02 | 6.64 |
| 03 | 9.18 |
| 04 | 11.72 |
| 05 | 14.26 |
| 06 | 16.80 |
| 07 | 19.34 |
| 08 | 21.88 |
| 09 | 24.42 |
| 10 | 26.96 |
| 12 | 32.04 |

开关特性：

1、开关容量：切换时:25mA @24VDC
　　非切换时:100mA @50VDC
2、绝缘电阻：100MΩ at 500VDC
3、接触电阻：初始值50mΩ max 寿命终值100mΩ max
4、绝缘强度：500VAC 50Hz /1min
5、极间电容：<5pf，1MHz±10kHz
6、操作力：500gf max
7、电气寿命：2000次 <100mΩ@ 20次/min， 25mA 24VDC
8、适用温度：-20℃ to 85℃（无结冰）
9、焊接要求：
　手工焊接：320° C不超过2秒.（30瓦烙铁max.）
　波峰焊:260℃不超过5秒，在焊接和清洁过程中开关处于断开状态
10、开关出厂处于断开状态。

材料：
盖子:PBT塑料(红色或蓝色或黑色)
底座:PBT塑料（黑色）
操作杆:PBT塑料(白色)
灌封胶:环氧树脂
端子:磷铜，
电镀：
　全金：接触点镀镍底40μ"，镀金1.5μ"
　　插针脚镀镍底20μ"，镀金0.5μ"
　半锡金：接触点镀镍底40μ"，镀金1.5μ"
　　插针脚镀镍底20μ"，镀镀锡50μ"

| 标记 | 处数 | 分区 | 更改文件号 | 签名 | 年月日 |
|---|---|---|---|---|---|
| | | | | | |
| | | | | | |
| | | | | | |

| | | | |
|---|---|---|---|
| 设计 | 李春风 | 标准化 | |
| | | | |
| 审核 | 钟华华 | | |
| 工艺 | | 批准 | 罗孝金 |

首韩 SHOUHAN 深圳市首韩科技有限公司

外观图

| 阶段标记 | 重量 | 比例 |
|---|---|---|
| | 1 | 4:1 |

共 张 第 张

拨码开关

2.54-6P CJCB-BL

深圳市首韩科技有限公司

深圳市首韩科技有限公司
SHENZHEN SHOUHAN TECHNOLOGYCO.,LTD
Tel: 0755-27597601 Fax: 0755-27597491

# 承 认 书

# SPECIFICATION FOR APPROVAL

**产 品 编 码**
**material code:**

产品名称 Project: **拨码开关**

规格型号 Part No: **2.54-6P CJCB-BL**

**贵公司承认印 Approval signatures**

| 料 号/Part No. | 签 章/Signatures |
|---|---|
| | |

日期 Date:

| | | |
|---|---|---|
| 拟制/Drawn | 李春风 | 深圳市首韩科技有限公司 工程专用章 |
| 审核/Check | 钟华华 | |
| 批准/Approved | 罗孝金 | |

深圳市首韩科技有限公司

# 深圳市首韩科技有限公司

## 规格书

## DIPSWITCH DATASHEET

1.通则 Rule:

1.1: 测试条件 ：标准测试除非特别规定必须在温度5-35 ℃,相对湿度45-85 %及 860-1060 HPa 大气压力下进行。如上述条件仍有问题发生,需在重新再次测试时,其测试条件须限定在温度20 ±2℃, 相对湿度65±5%及 860-1060HPa大气压力。

1.1: Test conditions: Unless otherwise specified, standard tests must be conducted at temperatures of 5-35 ℃, relative humidity of 45-85%, and atmospheric pressure of 860 -1060 HPa. If there are still issues with the above conditions, the testing conditions must be limited to a temperature of 20 ± 2 ℃, a relative humidity of 65 ± 5%, and an atmospheric pressure of 860-1060 HPa when retesting.

12:工作温度范围:-30~85℃贮存温度范围:-40～85℃

1.2: Working temperature range: -30~85 ℃ Storage temperature range: -40~85 ℃

2. 额定功率: 开关在 ON 状况时 ,DC24V,25mA。

3.电气性能Electrical performance:

| item | Name | Test conditions | Spec |
|---|---|---|---|
| 3.1 | 接触阻抗Contact impedance | AC 1KHz±200Hz 电压20mv以下电流 50mA 以下 ,或者DC5V 10mA<br>AC 1KHz ± 200Hz voltage below 20mV current below 50mA, or DC5V 10mA | Max 100mΩ |
| 3.2 | 绝缘阻抗<br>Insulation impedance | 电压DC500V,60±5秒, 相邻两个端子<br>Voltage DC500V, 60±5 seconds, adjacent to two terminals | Min 100MΩ |
| 3.3 | 耐电压<br>withstanding voltage | 60±5秒相邻两个端子间测定<br>电压AC500V(50~60Hz,电流2mA)<br>Voltage AC500V (50~60Hz,current 2mA)<br>60±5 seconds, measured between adjacent terminals | 无绝缘破坏现象<br>No insulation damage phenomenon |
| 3.4 | 静电容量<br>Electrostatic capacity | 1MHz ± 10KHz相邻两个端子之间测定<br>Measurement between adjacent terminals at 1MHz±10KHz | Max 5PF |

4.机械性能 Mechanical performance:

| itme | Name | Test conditions | Spec |
|---|---|---|---|
| 4.1 | 推力thrust | 推钮向操作方向平行推移<br>Push the button parallel to the direction of operation | 500gf MAX |

深圳市首韩科技有限公司

| | | | |
|---|---|---|---|
| 4.2 | 端子强度<br>Terminal strength | 端子前端任意方向：静止施压 500gf，60±5秒，每次一个端子<br>Terminal front and in any direction: apply static pressure of 500gf, 60±5 seconds, one terminal at a time | 端子无严重脱落破损，无严重松脱端子轻微弯曲可接受,四项电气性能符合<br>The terminals are not severely detached or damaged, and slight bending of the terminals is acceptable. The four electrical properties meet the requirements |
| 4.3 | 操作强度<br>Operating intensity | 1. 向推钮操作方向施压<br>2. 向推钮横向施压<br>3. 向推钮垂直施压<br>压力强度 1kg 时间 15 秒<br>1.Apply pressure in the direction of the push button operation<br>2.Apply lateral pressure to the push button<br>3.Apply pressure vertically to the push button<br>Pressure intensity 1kg, time 15 seconds | 端子无严重松脱，弯曲，或机械异常四项电气性能符合<br>The terminals are not severely loose, bent, or mechanically abnormal. The four electrical properties meet the requirements |
| 4.4 | 耐震性<br>Shock resistance | 震动周波数 :10～55Hz震动幅度 :1.5mm<br>震动周期 :10～55～10(Hz)60 ±5秒<br>周期震动变化方法：对数又与直线近似 震动方向：推钮操作方向、横向、垂直三种方向<br>Vibration frequency: 10~55Hz<br>Vibration amplitude: 1.5mm<br>Vibration period:10~55~10 (Hz) 60±5 seconds<br>Vibration method: logarithmic and approximate to a straight line.<br>Vibration direction: push button operation direction, lateral and vertical direction | 接触阻抗 :Max 100mΩ<br>绝缘阻抗 :Min 10MΩ<br>耐电压 :AC500V,60 ±5秒(50~60Hz 电流 2mA)<br>无绝缘破坏现象<br>推力:20～500gf<br>推力规格误差 30% 内，无外观及构造异常<br>Contact impedance:Max 100mΩ<br>Insulation impedance:Min 10MΩ<br>Voltage withstand:AC 500V 60±5 seconds (50-60Hz current 2mA)<br>Noinsulation damage phenomenon Thrust:20~500gf<br>Thrust specification error within 30%,with no appearanceor structural abnormalities |
| 4.5 | 着锡性<br>Tinning property | 焊锡温度:255 ±5℃<br>浸渍时间:3 ±0.5秒<br>Soldering temperature: 255 ± 5 ℃<br>Immersion time: 3 ± 0.5 seconds | 浸渍部份,着锡率 75% 以上<br>The impregnation part has a tin deposition rate of over 75% |

深圳市首韩科技有限公司

| | | | |
|---|---|---|---|
| 4.6 | 耐焊性<br>soldering resistance | **自动焊锡炉**<br>产品放置于电路基板表面温度 240±5℃，时间 5±1 秒，推钮置于 ON 的位置，进行焊锡作业<br>**手工焊锡**<br>产品放置于电路基板,使用 30W 陶瓷控温烙铁焊着,温度控制于 320℃±5℃, 焊接时间每 3 秒以内.<br>Automatic soldering furnace<br>Place the product on the surface of the circuit board at a temperature of 240 ± 5 ℃ for 5 ± 1 second, and place the push button in the O N position for soldering operation<br>Hand Soldering<br>The product is placed on the circuit board and soldered with a 30W ceramic temperature controlled soldering iron. The temperature is controlled at 320 ℃± 5 ℃, and the soldering time is within 3 seconds | 接触阻抗 :Max 100mΩ<br>绝缘阻抗 :Min 10MΩ<br>耐电压 :AC500V,60 ±5 秒(50~60Hz 电流 2mA)<br>无绝缘破坏现象<br>推力:20 ~ 500gf<br>推力规格误差 30% 内,无外观及构造异常<br>Contact impedance:Max 100mΩ<br>Insulation impedance:Min 10MΩ<br>Voltage withstand:AC 500V 60±5 seconds (50-60Hz current 2mA)<br>Noinsulation damage phenomenon Thrust:20~500gf<br>Thrust specification error within 30%,with no appearanceor structural abnormalities |

5.耐候性Weathering resistance

| Item | Name | Test conditions | Spec |
|---|---|---|---|
| 5.1 | 耐寒性<br>cold resistance | 置于温度 –40 ±2℃ 内 250 小时后,放置于常温常湿中 1 小时,并于 1 小时内测定(开关于水滴去除状态下)<br>After being placed at a temperature of -40 ± 2 ℃ for 250 hours, place it in normal temperature and humidity for 1 hour, and measure it within 1 hour (under the condition of water droplet removal) | 接触阻抗 :Max 100mΩ 绝缘阻抗 :Min 100MΩ<br>耐电压:AC500V,60 ±5 秒 (50~60Hz 电流 2mA)<br>无绝缘破坏现象<br>推力:20 ~500gf<br>推力规格误差 30% 内,无外观及构造异常<br>Contact impedance:Max 100mΩ<br>Insulation impedance:Min 10MΩ<br>Voltage withstand:AC 500V 60±5 seconds (50-60Hz current 2mA)<br>Noinsulation damage phenomenon Thrust:20~500gf<br>Thrust specification error within 30%, with no appearanceor structural abnormalities |

深圳市首韩科技有限公司

| | | | |
|---|---|---|---|
| 5.2 | 耐热性<br>heat resistance | 置于温度 85 ±2℃ 内 250 小时后，放置于常温常湿中 1 小时，并于 1 小时以内测定<br><br>After being placed at a temperature of 85±2℃ for 250 hours, place it in normal temperature and humidity for 1 hour, and measure it within 1 hour | 接触阻抗:Max 100mΩ<br>绝缘阻抗:Min 100MΩ<br>耐电压:AC500V,60±5秒<br>(50~60Hz电流2mA)无绝缘破坏现象<br>推力规格误差30%内,<br>推力:20-500gf<br>无外观及构造异常<br><br>Contact impedance:Max 100mΩ<br>Insulation impedance:Min 10MΩ<br>Voltage withstand:AC 500V 60±5<br>seconds (50-60Hz current 2mA)<br><br>Noinsulation damage phenomenon Thrust:20~500gf<br>Thrust specification error within30%,with no appearanceor structural abnormalities |
| 5.3 | 耐湿性<br>moisture resistance | 置于温度 40 ±2℃，相对湿度 90 ~ 95%,250 小时后，置于常温常湿中 1 小时，并于 1 小时以内测定<br>(开关于水滴去除状态下)<br>Place at a temperature of 40 ± 2 ℃ and a relative humidity of 90~95%. After 250 hours, place in a normal temperature and humidity environment<br>Hour and measure within 1 hour<br>(Regarding the state of water droplet removal) | 接触阻抗 :Max 100mΩ<br>绝缘阻抗 :Min 10MΩ<br>耐电压 :AC500V,60 ±5秒<br>(50~60Hz 电流 2mA)<br>无绝缘破坏现象<br>推力:20 ~ 500gf<br>推力规格误差 30% 内,<br>无外观及构造异常<br><br>Contact impedance:Max 100mΩ<br>Insulation impedance:Min 10MΩ<br>Voltage withstand:AC 500V 60±5<br>seconds (50-60Hz current 2mA)<br><br>Noinsulation damage phenomenon<br>Thrust:20~500gf<br>Thrust specification error within 30%,with no appearanceor structural abnormalities |
| 5.4 | 盐雾试验<br><br>Salt spray test | 温度 35±2℃，盐水浓度 5±1% (重量比)<br>恒温槽内放置 48±1 时试<br>验后以清水冲洗<br>Temperature 35 ± 2 ℃, salt water concentration 5 ± 1% (by weight), placed in a constant temperature bath for 48 ± 1. After the test, rinse with clean water | 无妨碍机能锈蚀状态<br>Unobstructed functional corrosion status |

深圳市首韩科技有限公司

| | | | |
|---|---|---|---|
| 5.5 | 温度循环试验<br><br>Temperature cycling test | 循环条件必须符合常温,常湿状态之下,样品处于正常状况,放置1小时后,并于1小时内测定<br>85℃±2℃<br>20℃±2℃<br>-25℃±2℃<br>The cycling conditions must comply with normal temperature and humidity conditions, and the sample must be in normal condition. After being left for 1 hour, it should be measured within 1 hour<br>85 ℃± 2 ℃<br>20 ℃± 2 ℃<br>-25 ℃± 2 ℃ | 接触阻抗 :Max 100mΩ<br>绝缘阻抗 :Min 10MΩ<br>耐电压:AC500V,60±5秒(50~60Hz 电流 2mA)<br>无绝缘破坏现象<br>推力:20 ~ 500gf<br>推力规格误差30% 内,无外观及构造异常<br>Contact impedance:Max 100mΩ<br>Insulation impedance:Min 10MΩ<br>Voltage withstand:AC 500V 60±5 seconds (50-60Hz current 2mA)<br><br>Noinsulation damage phenomenon<br>Thrust:20~500gf<br>Thrust specification error within 30% ,with no appearanceor structural abnormalities |

6.耐久性 Durability

| item | name | Test conditions | Spec |
|---|---|---|---|
| 6.1 | 寿命试验<br>无负载<br>Life test without load | 每分钟15-20次<br>连续ON ← → OFF 动作3000次<br><br>15-20 times per minute<br>3000 consecutive ON←→OFF actions | 接触阻抗 :Max 100mΩ<br>绝缘阻抗 :Min 10MΩ<br>耐电压:AC500V,60±5秒(50~60Hz 电流 2mA)无绝缘破坏现象<br>推力:20 ~ 500gf<br>推力规格误差30% 内,无外观及构造异常<br>Contact impedance:Max 100mΩ<br>Insulation impedance:Min 10MΩ<br>Voltage withstand:AC 500V 60±5 seconds (50-60Hz current 2mA)<br>Noinsulation damage phenomenon<br>Thrust:20~500gf<br>Thrust specification error within 30%, with no appearanceor structural abnormalities |

深圳市首韩科技有限公司

| | | | |
|---|---|---|---|
| 6.2 | 寿命试验<br>有负载<br>Life test with load | DC24V 25mA每分钟 15~20 次连续 ON ← → OFF动作2000 次<br>DC 24V 25m A 15~20 times per minute, continuous O N ←→ O FF action 2000 times | 接触阻抗 :Max 100mΩ<br>绝缘阻抗 :Min 10MΩ<br>耐电压:AC500V ,60±5秒 (50~60Hz 电流 2mA)<br>无绝缘破坏现象<br>推力:20 ~ 500gf<br>推力规格误差 30% 内, 无外观及构造异常<br><br>Contact impedance:Max 100mΩ<br>Insulation impedance:Min 10MΩ<br>Voltage withstand:AC 500V 60±5 seconds (50-60Hz current 2mA)<br>Noinsulation damage phenomenon Thrust:20~500gf<br>Thrust specification error within 30%,with no appearanceor structural abnormalities |

深圳市首韩科技有限公司