◆DIMENSIONS

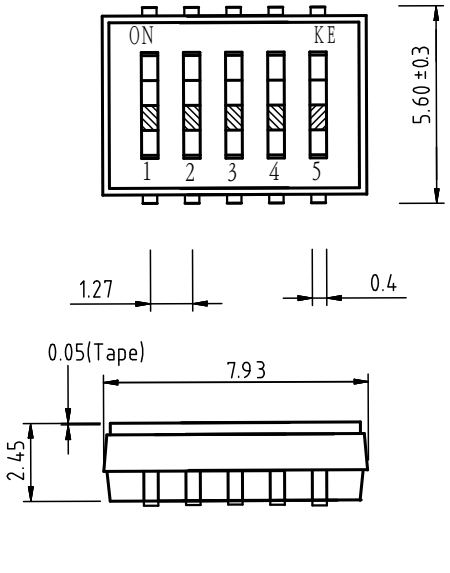

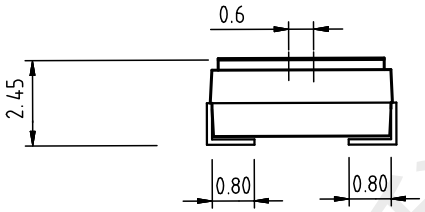

◆SCHEMATIC

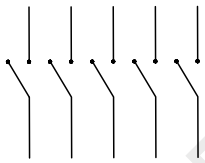

◆P.C.B LAYOUT

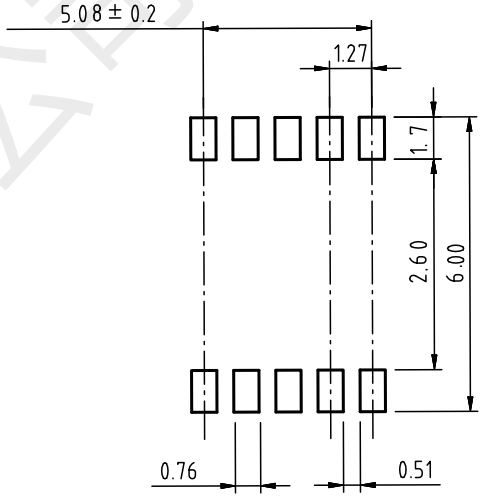

Poles(N)	A Dimension(mm)
01	2.87
02	4.12
03	5.41
04	6.66
05	7.93
06	9.20
08	11.74
10	14.28
TOLERANCE:±0.1mm	

◆STRUCTURE

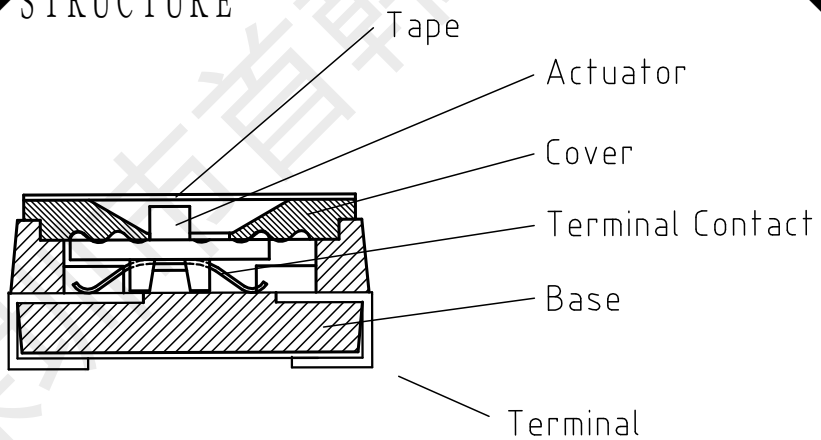

◆MATERIAL

Part Name	Material	Finished
Base	PPS UL94 V0	Black
Cover	PPS UL94 V0	Black
Actuator	Nylon UL94 V0	White
Movable	Beryllium	3μ" Gold
Terminal Contact	Brass	3μ" Gold
Terminal	Brass	μ" Gold
Tape	Polyimide	Amber

深圳市首韩科技有限公司

深圳市首韩科技有限公司	Drawing	李春风	Date	01/02/06	Remark:
	Design		Ratio	4:1	
	Check	钟华华	Unit	mm	
	Approved	罗孝金			

Product	DSHP Series
P/N	
Drawing No.	1.27-4PBJ TPPT

深圳市首韩科技有限公司
SHENZHEN SHOUHAN TECHNOLOGYCO.,LTD
Tel: 0755-27597601 Fax: 0755-27597491

承 认 书

SPECIFICATION FOR APPROVAL

产 品 编 码
material code:

产品名称 Project: **拨码开关**

规格型号 Part No: **1.27-4PBJ TPPT**

贵公司承认印 Approval signatures

料 号/Part No.	签 章/Signatures

日期 Date:

拟制/Drawn	李春风	深圳市首韩科技有限公司 工程专用章
审核/Check	钟华华	
批准/Approved	罗孝金	

深圳市首韩科技有限公司

深圳市首韩科技有限公司

规格书

DIPSWITCH DATASHEET

1.通则 Rule:

1.1: 测试条件 ：标准测试除非特别规定必须在温度5-35 ℃,相对湿度45-85 %及 860-1060 HPa 大气压力下进行。如上述条件仍有问题发生,需在重新再次测试时,其测试条件须限定在温度20 ±2℃, 相对湿度65±5%及 860-1060HPa大气压力。

1.1: Test conditions: Unless otherwise specified, standard tests must be conducted at temperatures of 5-35 ℃, relative humidity of 45-85%, and atmospheric pressure of 860 -1060 HPa. If there are still issues with the above conditions, the testing conditions must be limited to a temperature of 20 ± 2 ℃, a relative humidity of 65 ± 5%, and an atmospheric pressure of 860-1060 HPa when retesting.

12:工作温度范围:-30~85℃贮存温度范围:-40～85℃

1.2: Working temperature range: -30~85 ℃ Storage temperature range: -40~85 ℃

2. 额定功率: 开关在 ON 状况时 ,DC24V,25mA。

3.电气性能Electrical performance:

item	Name	Test conditions	Spec
3.1	接触阻抗Contact impedance	AC 1KHz±200Hz 电压20mv以下电流 50mA 以下 ,或者DC5V 10mA AC 1KHz ± 200Hz voltage below 20mV current below 50mA, or DC5V 10mA	Max 100mΩ
3.2	绝缘阻抗 Insulation impedance	电压DC500V,60±5秒, 相邻两个端子 Voltage DC500V, 60±5 seconds, adjacent to two terminals	Min 100MΩ
3.3	耐电压 withstanding voltage	60±5秒相邻两个端子间测定 电压AC500V(50~60Hz,电流2mA) Voltage AC500V (50~60Hz,current 2mA) 60±5 seconds, measured between adjacent terminals	无绝缘破坏现象 No insulation damage phenomenon
3.4	静电容量 Electrostatic capacity	1MHz ± 10KHz相邻两个端子之间测定 Measurement between adjacent terminals at 1MHz±10KHz	Max 5PF

4.机械性能 Mechanical performance:

itme	Name	Test conditions	Spec
4.1	推力thrust	推钮向操作方向平行推移 Push the button parallel to the direction of operation	500gf MAX

深圳市首韩科技有限公司

4.2	端子强度 Terminal strength	端子前端任意方向：静止施压 500gf，60±5秒，每次一个端子 Terminal front and in any direction: apply static pressure of 500gf, 60±5 seconds, one terminal at a time	端子无严重脱落破损，无严重松脱端子轻微弯曲可接受,四项电气性能符合 The terminals are not severely detached or damaged, and slight bending of the terminals is acceptable. The four electrical properties meet the requirements
4.3	操作强度 Operating intensity	1. 向推钮操作方向施压 2. 向推钮横向施压 3. 向推钮垂直施压 压力强度 1kg 时间 15 秒 1.Apply pressure in the direction of the push button operation 2.Apply lateral pressure to the push button 3.Apply pressure vertically to the push button Pressure intensity 1kg, time 15 seconds	端子无严重松脱，弯曲，或机械异常四项电气性能符合 The terminals are not severely loose, bent, or mechanically abnormal. The four electrical properties meet the requirements
4.4	耐震性 Shock resistance	震动周波数 :10～55Hz震动幅度 :1.5mm 震动周期 :10～55～10(Hz)60 ±5秒 周期震动变化方法：对数又与直线近似 震动方向：推钮操作方向、横向、垂直三种方向 Vibration frequency: 10~55Hz Vibration amplitude: 1.5mm Vibration period:10~55~10 (Hz) 60±5 seconds Vibration method: logarithmic and approximate to a straight line. Vibration direction: push button operation direction, lateral and vertical direction	接触阻抗 :Max 100mΩ 绝缘阻抗 :Min 10MΩ 耐电压 :AC500V,60 ±5秒(50~60Hz 电流 2mA) 无绝缘破坏现象 推力:20～500gf 推力规格误差 30% 内，无外观及构造异常 Contact impedance:Max 100mΩ Insulation impedance:Min 10MΩ Voltage withstand:AC 500V 60±5 seconds (50-60Hz current 2mA) Noinsulation damage phenomenon Thrust:20~500gf Thrust specification error within 30%,with no appearanceor structural abnormalities
4.5	着锡性 Tinning property	焊锡温度:255 ±5℃ 浸渍时间:3 ±0.5秒 Soldering temperature: 255 ± 5 ℃ Immersion time: 3 ± 0.5 seconds	浸渍部份,着锡率 75% 以上 The impregnation part has a tin deposition rate of over 75%

深圳市首韩科技有限公司

4.6	耐焊性 soldering resistance	**自动焊锡炉** 产品放置于电路基板表面温度 240±5℃，时间 5±1 秒，推钮置于 ON 的位置，进行焊锡作业 **手工焊锡** 产品放置于电路基板,使用 30W 陶瓷控温烙铁焊着,温度控制于 320℃±5℃, 焊接时间每 3 秒以内. Automatic soldering furnace Place the product on the surface of the circuit board at a temperature of 240 ± 5 ℃ for 5 ± 1 second, and place the push button in the O N position for soldering operation Hand Soldering The product is placed on the circuit board and soldered with a 30W ceramic temperature controlled soldering iron. The temperature is controlled at 320 ℃± 5 ℃, and the soldering time is within 3 seconds	接触阻抗 :Max 100mΩ 绝缘阻抗 :Min 10MΩ 耐电压 :AC500V,60 ±5 秒(50~60Hz 电流 2mA) 无绝缘破坏现象 推力:20 ~ 500gf 推力规格误差 30% 内,无外观及构造异常 Contact impedance:Max 100mΩ Insulation impedance:Min 10MΩ Voltage withstand:AC 500V 60±5 seconds (50-60Hz current 2mA) Noinsulation damage phenomenon Thrust:20~500gf Thrust specification error within 30%,with no appearanceor structural abnormalities

5.耐候性Weathering resistance

Item	Name	Test conditions	Spec
5.1	耐寒性 cold resistance	置于温度 –40 ±2℃ 内 250 小时后,放置于常温常湿中 1 小时,并于 1 小时内测定(开关于水滴去除状态下) After being placed at a temperature of -40 ± 2 ℃ for 250 hours, place it in normal temperature and humidity for 1 hour, and measure it within 1 hour (under the condition of water droplet removal)	接触阻抗 :Max 100mΩ 绝缘阻抗 :Min 100MΩ 耐电压:AC500V,60 ±5 秒 (50~60Hz 电流 2mA) 无绝缘破坏现象 推力:20 ~500gf 推力规格误差 30% 内,无外观及构造异常 Contact impedance:Max 100mΩ Insulation impedance:Min 10MΩ Voltage withstand:AC 500V 60±5 seconds (50-60Hz current 2mA) Noinsulation damage phenomenon Thrust:20~500gf Thrust specification error within 30%, with no appearanceor structural abnormalities

深圳市首韩科技有限公司

5.2	耐热性 heat resistance	置于温度 85 ±2℃ 内 250 小时后，放置于常温常湿中 1 小时，并于 1 小时以内测定 After being placed at a temperature of 85±2℃ for 250 hours, place it in normal temperature and humidity for 1 hour, and measure it within 1 hour	接触阻抗:Max 100mΩ 绝缘阻抗:Min 100MΩ 耐电压:AC500V,60±5秒 (50~60Hz电流2mA)无绝缘破坏现象 推力规格误差30%内, 推力:20-500gf 无外观及构造异常 Contact impedance:Max 100mΩ Insulation impedance:Min 10MΩ Voltage withstand:AC 500V 60±5 seconds (50-60Hz current 2mA) Noinsulation damage phenomenon Thrust:20~500gf Thrust specification error within30%,with no appearanceor structural abnormalities
5.3	耐湿性 moisture resistance	置于温度 40 ±2℃，相对湿度 90 ~ 95%,250 小时后，置于常温常湿中 1 小时，并于 1 小时以内测定 (开关于水滴去除状态下) Place at a temperature of 40 ± 2 ℃ and a relative humidity of 90~95%. After 250 hours, place in a normal temperature and humidity environment Hour and measure within 1 hour (Regarding the state of water droplet removal)	接触阻抗 :Max 100mΩ 绝缘阻抗 :Min 10MΩ 耐电压 :AC500V,60 ±5秒 (50~60Hz 电流 2mA) 无绝缘破坏现象 推力:20 ~ 500gf 推力规格误差 30% 内, 无外观及构造异常 Contact impedance:Max 100mΩ Insulation impedance:Min 10MΩ Voltage withstand:AC 500V 60±5 seconds (50-60Hz current 2mA) Noinsulation damage phenomenon Thrust:20~500gf Thrust specification error within 30%,with no appearanceor structural abnormalities
5.4	盐雾试验 Salt spray test	温度 35±2℃，盐水浓度 5±1% (重量比) 恒温槽内放置 48±1 时试 验后以清水冲洗 Temperature 35 ± 2 ℃, salt water concentration 5 ± 1% (by weight), placed in a constant temperature bath for 48 ± 1. After the test, rinse with clean water	无妨碍机能锈蚀状态 Unobstructed functional corrosion status

深圳市首韩科技有限公司

5.5	温度循环试验 Temperature cycling test	循环条件必须符合常温,常湿状态之下,样品处于正常状况,放置1小时后,并于1小时内测定 85℃±2℃ 20℃±2℃ -25℃±2℃ The cycling conditions must comply with normal temperature and humidity conditions, and the sample must be in normal condition. After being left for 1 hour, it should be measured within 1 hour 85 ℃± 2 ℃ 20 ℃± 2 ℃ -25 ℃± 2 ℃	接触阻抗 :Max 100mΩ 绝缘阻抗 :Min 10MΩ 耐电压:AC500V,60±5秒(50~60Hz 电流 2mA) 无绝缘破坏现象 推力:20 ~ 500gf 推力规格误差30% 内,无外观及构造异常 Contact impedance:Max 100mΩ Insulation impedance:Min 10MΩ Voltage withstand:AC 500V 60±5 seconds (50-60Hz current 2mA) Noinsulation damage phenomenon Thrust:20~500gf Thrust specification error within 30% ,with no appearanceor structural abnormalities

6.耐久性 Durability

item	name	Test conditions	Spec
6.1	寿命试验 无负载 Life test without load	每分钟15-20次 连续ON ← → OFF 动作3000次 15-20 times per minute 3000 consecutive ON←→OFF actions	接触阻抗 :Max 100mΩ 绝缘阻抗 :Min 10MΩ 耐电压:AC500V,60±5秒(50~60Hz 电流 2mA)无绝缘破坏现象 推力:20 ~ 500gf 推力规格误差30% 内,无外观及构造异常 Contact impedance:Max 100mΩ Insulation impedance:Min 10MΩ Voltage withstand:AC 500V 60±5 seconds (50-60Hz current 2mA) Noinsulation damage phenomenon Thrust:20~500gf Thrust specification error within 30%, with no appearanceor structural abnormalities

深圳市首韩科技有限公司

6.2	寿命试验 有负载 Life test with load	DC24V 25mA每分钟 15~20 次连续 ON ← → OFF动作2000 次 DC 24V 25m A 15~20 times per minute, continuous O N ←→ O FF action 2000 times	接触阻抗 :Max 100mΩ 绝缘阻抗 :Min 10MΩ 耐电压:AC500V ,60±5秒 (50~60Hz 电流 2mA) 无绝缘破坏现象 推力:20 ~ 500gf 推力规格误差 30% 内, 无外观及构造异常 Contact impedance:Max 100mΩ Insulation impedance:Min 10MΩ Voltage withstand:AC 500V 60±5 seconds (50-60Hz current 2mA) Noinsulation damage phenomenon Thrust:20~500gf Thrust specification error within 30%,with no appearanceor structural abnormalities

深圳市首韩科技有限公司