REV.	ECR#	DESCRIPTION	DATE	DRAWN	CHECKED	APPROVED

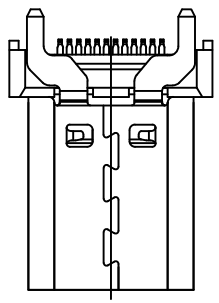

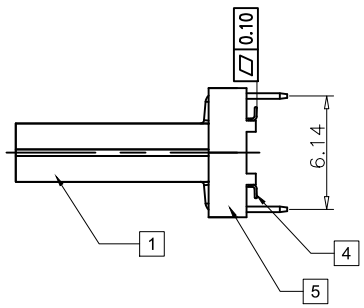

NOTE:

1.Contact Resistance:40mOHM Max.;

2.Dielectric Withstanding Voltage:100V AC For 1 Minute;

3.Insulation Resistance:100M OHM Min.;

4.Mating And Unmating Force: Mating Force: 5~20N Unmating Force: 8~20N; 6~20N AFTER TEST;

5.Durability:10000 Cycles;

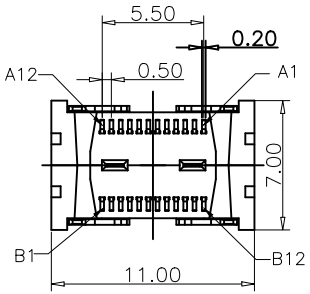

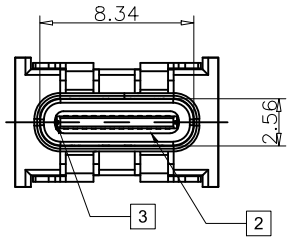

USB TYPE-C PIN ASSIGNMENTS

PIN NUMBER	SIGNAL NAME	PIN NUMBER	SIGNAL NAME
A1	GND	B12	GND
A2	SSTXp1	B11	SSRXp1
A3	SSTXn1	B10	SSRXn1
A4	VBUS	B9	VBUS
A5	CC1	B8	SBU2
A6	Dp1	B7	Dn2
A7	Dn1	B6	Dp2
A8	SBU1	B5	CC2
A9	VBUS	B4	VBUS
A10	SSRXn2	B3	SSTXn2
A11	SSRXp2	B2	SSTXp2
A12	GND	B1	GND

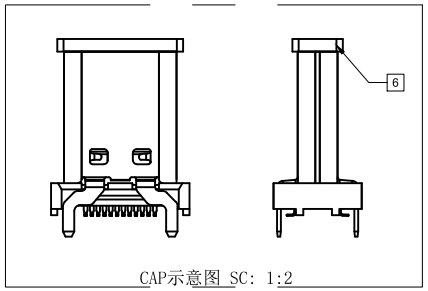

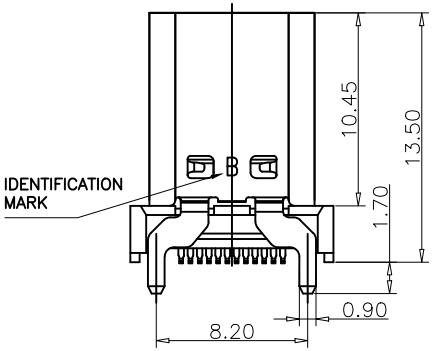

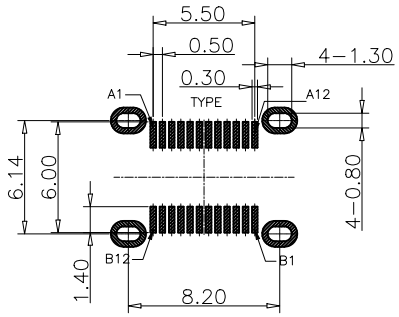

RECOMMEND P.C.B LAYOUT(COMPONENT SIDE)

TOLERANCE FOR PCB LAYOUT IS ± 0.05

Item	Title	Material	Dispose	Q'TY
1	Shell	SUS304	Ni:30u" Min.	1PCS
2	GND Plate	SUS301		2PCS
3	Mid Plate	SUS301		1PCS
4	Contact	C7025	Mating Area: Gold Solder Tails: Matt Tin	2PCS
5	InsertMolding	LCP E6808	UL 94V-0 Black	1PCS
6	COVER	LCP E6808	UL 94V-0 Black	1PCS

料号编码:

WTT - XX X X X X XXX XX XX

公司品牌

内部编码

产品类型
M:公座系列
F:母座系列

PIN 数
06:6P
16:16P
24:24P
以此类推

产品结构
A:立式
B:卧式
C:侧立式

上板类型
D:插件
C:沉板
J:夹板
V:插贴
H:焊线

S:全贴

产品高度
120:12.0H
130:13.0H
135:13.5H
150:15.0H
以此类推

产品系列
CG:常规系列
FS:防水系列
DT:外壳带弹片系列
WZ:无柱系列

产品流水号

Part Number	Product Description
WTT-02F24AV135CG23	**TYPE-C 24PIN Vertical SMD H13.5MM**
CUSTOMER DRAWING	

DRAWN	Zhang Xincheng	Tolerances (Except as Noted) GENERAL TOLERANCE:	Units: Metric (mm)
CHECKED	Xiong fangyuan	X. ± 0.30	3rd Angle Projection
APPROVED	Huangshaohuang	X.X ± 0.20	
Drawing Date	22/05/24	X.XX ± 0.15 X.XXX ± 0.05	

COMPLIANT ©2017 UL LLC UL94V-0

RoHS COMPLIANT 2011/65/EU Deca-BDE

REACH COMPLIANT SVHC

WTT®

用心连接世界

SCALE	SIZE:	SHEET:
1:1	A4	1 or 2

REV.	ECR#	DESCRIPTION	DATE	DRAWN	CHECKED	APPROVED

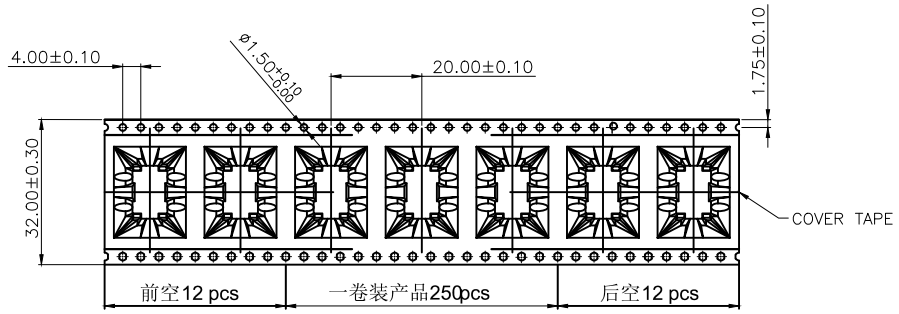

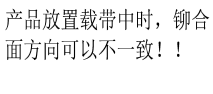

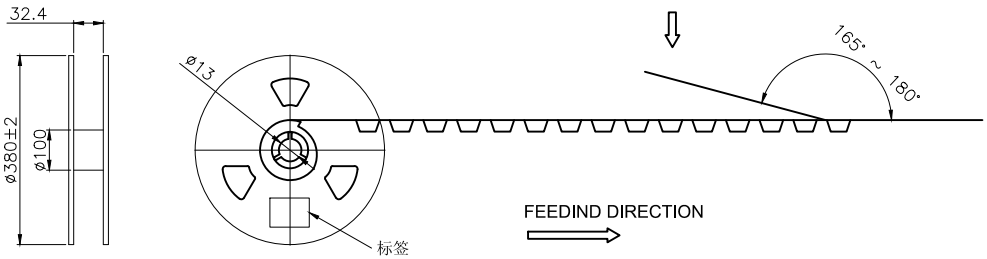

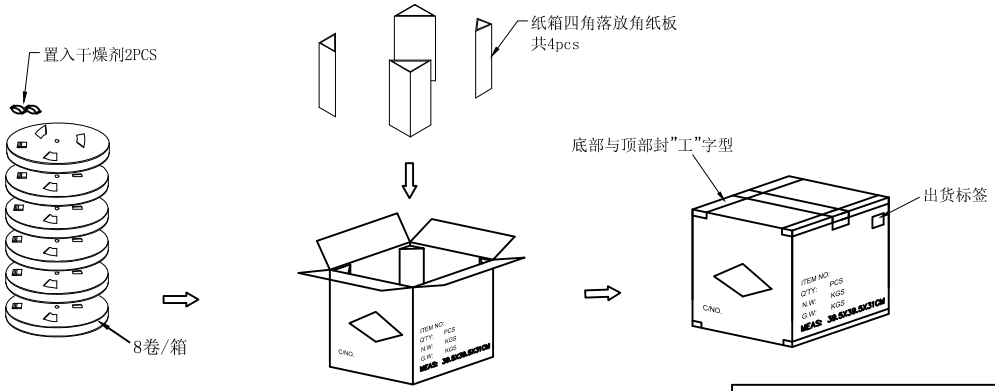

备注：

1. 包装要求整洁,美观,工整,统一
2. 作业过程不可损坏产品,轻拿轻放
3. 卷盘卷好载带后，在载带外需再包一圈保护带。
4. 包装过程中盖带不可遮住送料齿轮孔。
5. 每次批量包装前，需测试载带与盖带间的剥离力，盖带剥离力为0.3~1.2N(30~130克),剥离速度300mm/Min,剥离角度165°~180°。

包 装 信 息	
每盘产品數	250pcs
每箱卷盘數	8卷
每箱产品數	2000pcs
产品单重	-
每箱净重	-
每箱毛重	以实际为准

品名	规格	单位	用量
载带	Φ380,载带W=32mm PH=16mm T=0.5mm PET透明色	SET	1/300
上封带	自粘式透明,T=0.05mm,W=25.5mm	M	3.7/300
三角板	10cm*10cm*13cm,H26cm	PCS	4/2400
外箱	K=K,外径39.5*39.5*31CM	PCS	1/2400

Part Number	Product Description
WTT-02F24AV135CG23	**TYPE-C 24PIN Vertical SMD H13.5MM**
CUSTOMER DRAWING	

DRAWN	Zhang Xincheng	Tolerances (Except as Noted) GENERAL TOLERANCE:	Units: Metric (mm)
CHECKED	Xiong fangyuan	X. ± 0.30	
APPROVED	Huangshaohuang	X.X ± 0.20	3rd Angle Projection
Drawing Date	22/05/24	X.XX ± 0.15	
		X.XXX ± 0.05	

COMPLIANT ©2017 UL LLC UL94V-0 | RoHS COMPLIANT 2011/65/EU Deca-BDE | REACH COMPLIANT SVHC

WTT® 用心连接世界

SCALE	SIZE:	SHEET:
1:1	A4	2 or 2