85mΩ, 1A Fast Response Current-Limited Power-Distribution Switch

FEATURES

- Compliant to USB Specifications
- Integrated 85mΩ Power MOSFET
- Low Supply Current
  - 13μA Typical at Switch On State
  - 1μA Typical at Switch Off State
- Wide Input Voltage Range:2.4V to 5.5V
- Fast Transient Response:<2μs
- Reverse Current Flow Blocking
- Thermal Shutdown Protection
- Hot Plug-In Application (Soft-Start)
- Available in a 5-Pin SOT23-5 Package

APPLICATIONS

- USB Bus/Self Powered Hubs
- USB Peripherals
- Notebook Computers
- Battery-Charger Circuits
- Personal Communication Devices

GENERAL DESCRIPTION

The EA6808 is a cost-effective, low voltage, single P-MOSFET load switch, optimized for self-powered and bus-powered Universal Serial Bus (USB) applications. This switch operates with inputs ranging from 2.4V to 5.5V, making it ideal for both 3V and 5V systems. The switch's low $R_{DS(ON)}$, 85mΩ, meets USB voltage drop requirements. The EA6808 is also protected from thermal overload which limits power dissipation and junction temperatures. It can be used to control loads that require up to 1A. The quiescent supply current is typically 13μA at switch on state. At switch off state the supply current decreases to less than 1μA. The EA6808 is available in SOT23-5 package.

TYPICAL APPLICATION

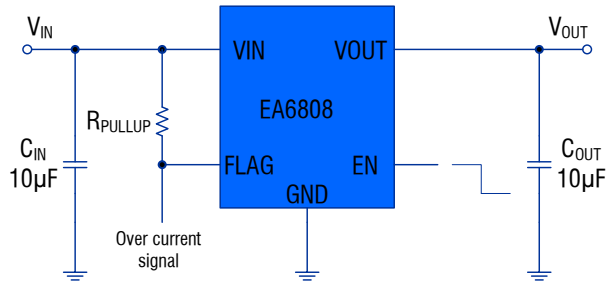

Figure 1. Basic Application Circuit

ABSOLUTE MAXIMUM RATINGS (Note 1)

Input Supply Voltage……..-0.3V to 7V
EN Voltages……..-0.3V to (V_{IN}+0.3V)
FLAG Voltage……-0.3V to (V_{IN}+0.3V)
Power Dissipation……...0.4W
Thermal Resistance θ_{JC}……130°C/W
Thermal Resistance θ_{JA}……250°C/W

Junction Temperature(Note2)…….....150°C
Operating Temperature Range…….-40°C to 85°C
Lead Temperature(Soldering,10s)……...300°C
Storage Temperature Range……..-65°C to 150°C
ESD HBM(Human Body Mode)……...2kV
ESD MM(Machine Mode)……200V

PACKAGE/ORDER INFORMATION

	Order Part Number	Package	
TOP VIEW 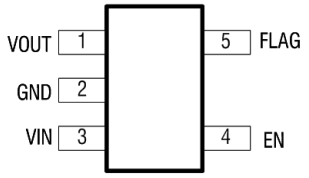 5-LEAD PLASTIC SOT-23 T_{JMAX} = 150°C, θ_{JA} = 250°C/ W, θ_{JC} = 130°C/W	EA6808	SOT23-5	

PIN DESCRIPTION

Pin Name	Pin Number	Description
VOUT	1	Power-switch output
GND	2	Ground connection; connect externally to Power PAD
VIN	3	Active-low open-drain output, asserted during over current, over temperature, or reverse-voltage conditions.
EN	4	Enable input, logic high turns on power switch
FLAG	5	Input voltage; connect a 10uF or greater ceramic capacitor from VIN to GND as close to the IC as possible

ELECTRICAL CHARACTERISTICS (Note 3)

(V_{IN}=5V, T_A=-40°Cto 85° C, unless otherwise noted.)

PARAMETER		SYMBOL	CONDITIONS	MIN	TYP	MAX	UNIT
Input Voltage Range		V_{IN}		2.4		5.5	V
Switch On Resistance		$R_{DS(ON)}$	V_{IN}=5V		85	100	mΩ
			V_{IN}=3V		100	110	mΩ
Operation Quiescent Current		I_Q	V_{IN}=5V,EN=Active, No load		13	25	μA
Off Supply Current		$I_{Q(OFF)}$	V_{IN}=5.5V,EN=Inactive			1	μA
Off Switch Current		$I_{Q(SW_OFF)}$	V_{IN}=5.5V,EN=Inactive			1	μA
Under-voltage Lockout		V_{UVLO}	V_{IN} Increasing		1.8	2.4	V
Under-voltage Lockout Hysteresis		ΔV_{UVLO}	V_{IN} decreasing		0.1		V
Current Limit Threshold		I_{LIM}			1		A
EN Threshold	Logic-Low Voltage	V_{IL}	V_{IN}=2.5V to 5.5V			0.8	V
	Logic-High Voltage	V_{IH}	V_{IN}=2.5V to 5.5V	2			V
Output Leakage Current		I_{LEAK}	EN=Inactive, R_{LOAD}=0Ω		0.5	10	μA
Current Limit Response Time		T_{RESP}	V_{IN}=5V		1		μs
Thermal Shutdown Protection		T_{SD}			150		°C
Thermal Shutdown Hysteresis		ΔT_{SD}			20		°C

Note 1: Absolute Maximum Ratings are those values beyond which the life of a device may be impaired.
Note 2: T_J is calculated from the ambient temperature T_A and power dissipation P_D according to the following formula: $T_J = T_A + (P_D) \times (250°C/W)$.
Note 3: 100% production test at 25°C. Specifications over the temperature range are guaranteed by design and characterization.

FUNCTIONAL BLOCK DIAGRAM

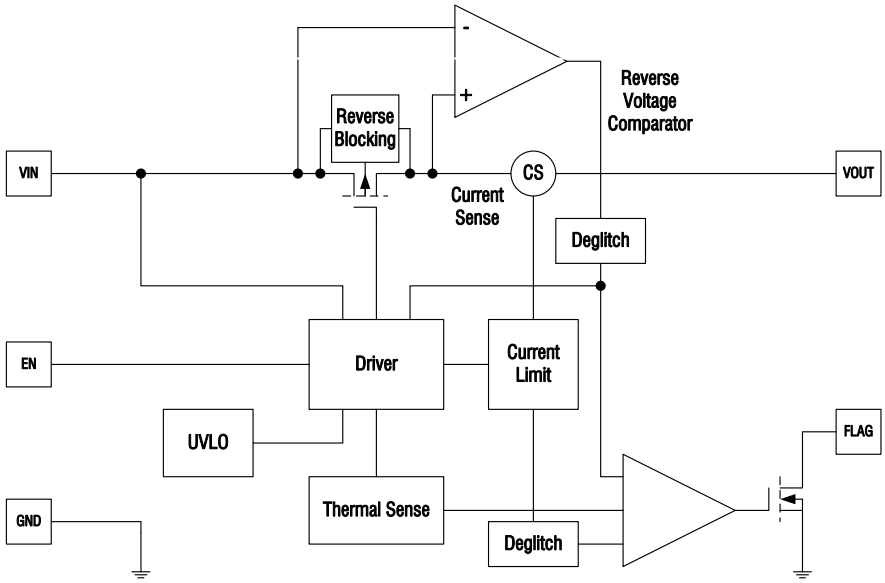

Figure 2. EA6808 Block Diagram

APPLICATIONS INFORMATION

The EA6808 is a single channel current limiting load switch that is intended to protect against short circuit and over current events by current limiting to a preset level. This device is optimized for self-powered and bus-powered Universal Serial Bus (USB) applications. The switch's low $R_{DS(ON)}$, 85mΩ, meets USB voltage drop requirements; and a flag output is available to indicate fault conditions to the local USB controller.

Input and Output

V_{IN} (input) is the power source connection to the internal circuitry and the source of the MOSFET. V_{OUT} (output) is the drain of the MOSFET. In a typical application, current flows through the switch from V_{IN} to V_{OUT} toward the load. If V_{OUT} is greater than V_{IN}, current will flow from V_{OUT} to V_{IN} since the MOSFET is bidirectional when on. The EA6808's reverse current blocking feature prevents current to flow from V_{OUT} to V_{IN} when the device is disabled.

Soft Start for Hot Plug-In Applications

In order to eliminate the upstream voltage droop caused by the large inrush current during hot-plug events,the "soft-start" feature effectively isolates the power source from extremely large capacitive loads,satisfying the USB voltage droop requirements.

Input capacitor

The input capacitor C_{IN} protects the power supply from current transients generated by the load attached to the EA6808. When a short circuit is suddenly applied to the output of the EA6808, a large current, limited only by the $R_{DS(ON)}$ of the MOSFET, will flow for less than 2μs before the current limit circuitry activates. In this event, a moderately sized C_{IN} will dramatically reduce the voltage transient seen by the power supply and by other circuitry upstream from the EA6808. The extremely fast short-circuit response time of the EA6808 reduces the size requirement for C_{IN}. C_{IN} should be located as close to the device V_{IN} pin as practically possible. Ceramic, tantalum, or aluminum electrolytic

capacitors are appropriate for C_{IN}. There is no specific capacitor ESR requirement for C_{IN}.

However, for higher current operation, ceramic capacitors are recommended for C_{IN} due to their inherent capability over tantalum capacitors to withstand input current surges from low impedance sources such as batteries in portable devices.

Output capacitor

A low-ESR 150μF aluminum electrolytic or tantalum between V_{OUT} and GND is strongly recommended to meet the 330mV maximum droop requirement in the hub V_{BUS} (Per USB 2.0, output ports must have a minimum 120μF of low-ESR bulk capacitance per hub). Standard bypass methods should be used to minimize inductance and resistance between the bypass capacitor and the downstream connector to reduce EMI and decouple voltage droop caused when downstream cables are hot-insertion transients. Ferrite beads in series with V_{BUS}, the ground line and the 0.1μF bypass capacitors at the power connector pins are recommended for EMI and ESD protection. The bypass capacitor itself should have a low dissipation factor to allow decoupling at higher frequencies.

Thermal Considerations

Since the EA6808 has internal current limit and over temperature protection,junction temperature is rarely a concern .However , if the application requires large currents in a hot environment, it is possible that temperature , rather than current limit, will be the dominant regulating condition. In these applications,the maximum current available without risk of an over-temperature condition must be calculated .Power dissipation can be calculated based on the output current and the $R_{DS(ON)}$ of switch as below.

$$P_D = R_{DS(ON)} \times I_{OUT}^2$$

Although the devices are rated for 1A of output current, but the application may limit the amount of output current based on the total power dissipation and the ambient temperature. The final operating junction temperature for any set of conditions can be estimated by the following thermal equation :

$$P_{D(MAX)} = \frac{T_{J(MAX)} - T_A}{\theta_{JA}}$$

Where $T_{J(MAX)}$ is the maximum operation junction temperature 150°C,T_A is the ambient temperature and the θ_{JA} is the junction to ambient thermal resistance. The junction to ambient thermal resistance θ_{JA} is layout dependent.For SOT23-5 and TSOT23-5 packages, the thermal resistance θ_{JA} is 250°C/W. The maximum power dissipation at T_A = 25°C is 0.4W for SOT23-5 and TSOT23-5 Package.

PCB Layout Recommendations

When laying out the printed circuit board, the following checking should be used to ensure proper operation of the EA6808. Check the following in your layout:

- Does the (+) plates of C_{IN} connect to VIN as closely as possible. This capacitor provides the AC current to the internal power MOSFETs.
- Keep the (-) plates of C_{IN} and C_{OUT} as close as possible

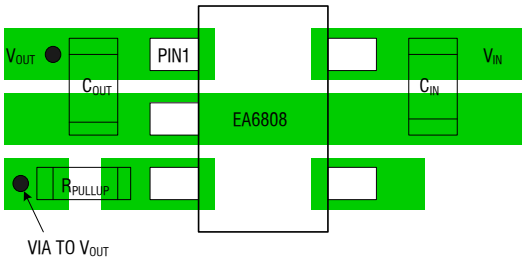

Figure 3. EA6808 Suggested Layout

PACKAGE DESCRIPTION

SOT23-5

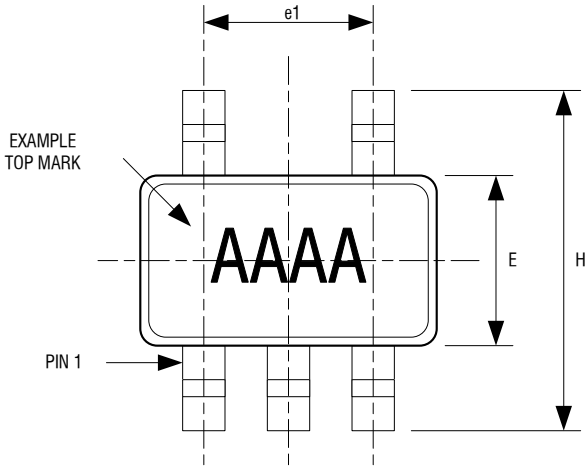

TOP VIEW

5LD SOT-23 PACKAGE OUTLINE DIMENSIONS

Dimension	Min.	Max.
A	1.05	1.35
A1	0.04	0.15
B	0.3	0.5
C	0.09	0.2
D	2.8	3.0
H	2.5	3.1
E	1.5	1.7
e	0.95 REF.	
e1	1.90 REF.	
L1	0.2	0.55
L	0.35	0.8
Q	0°	10°

NTF

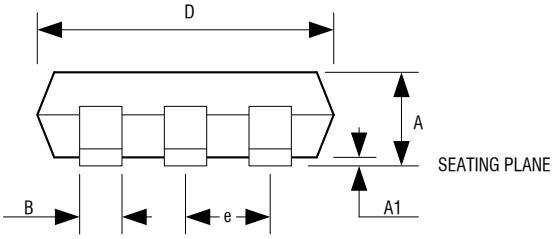

FRONT VIEW

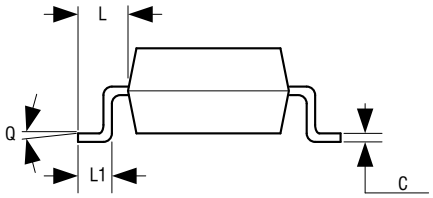

SIDE VIEW

NOTE:
1.DIMENSIONS ARE IN MILLIMETERS
2.DRAWING NOT TO SCALE
3.DIMENSIONS ARE INCLUSIVE OF PLATING
4.DIMENSIONS ARE EXCLUSIVE OF MOLD FLASH AND METAL BURR