LTC2410TSK TIME-LAG FUSE

Description/描述

LTC2410TSK series time-lay square Surface Mount fuses are ceramic tube/end cap constructions,RoHS compliant. Provide board level primary and secondary circuit protection in a wide variety of applications. With excellent inrush current withstanding capability, excellent reliability for thermal and mechanic shock, also have a high reliability and stable solder ability, end caps are gold plated.

Features/特征

- Time-lag
- High current rating available
- Low temperature de-rating
- Tape and Reel for automatic placement
- Small size(6.1mm*2.5mm)
- Wide operating temperature range(-55℃ to 125℃)
- RoHS compliant
- Conflict free metals
- Wide range of current rating available

Applications/应用

- LED lighting
- LCD backlight inverter
- PC server
- Wireless base station
- Digital camera
- Notebook PC
- Portable Devices
- Cooling fan system
- White goods
- Industrial equipment
- Battery devices
- Power supply
- Storage system
- Game console
- Medical equipment
- LCD/PDP devices
- Networking devices
- Telecom system
- Office equipment
- Automotive devices

Electrical Characteristics/电气特性

% of Ampere Rating	Opening Time at 25℃
100%	T > 4hrs
200%	T < 120s
400%	1 < T < 1000ms
1000%	1 < T < 100ms

Agency Approvals/ 认证

Agency	Agency File Number	Ampere Range
	E549536	0.1A~15A

Performance Specifications/电性参数

Part Number	Rated Current (A)	Rated Voltage (V)	Breaking Capacity	DCR (Ω/mΩ)	Voltage drop (mv)	I^2t (A^2sec)
LTC2410-0050TSK	0.05	250Vac 250Vdc	50A@250V 100A@125V	25-41Ω	2410-3350	0.0033
LTC2410-0062TSK	0.062			13-26Ω	1520-2360	0.0035
LTC2410-0080TSK	0.08			19-23Ω	2930-3410	0.0064
LTC2410-0100TSK	0.10			9.1-10.9Ω	1180-1410	0.015
LTC2410-0120TSK	0.12			3.9-6.2Ω	552-912	0.072
LTC2410-0150TSK	0.15			1.75-2.5Ω	320-437	0.162
LTC2410-0180TSK	0.18			1.1-1.58Ω	283-318	0.227
LTC2410-0200TSK	0.20			0.71-0.93Ω	187-214	0.12
LTC2410-0250TSK	0.25			0.6-0.84Ω	164-254	0.1
LTC2410-0300TSK	0.30			0.35-0.75Ω	148-209	0.18
LTC2410-0350TSK	0.35			0.32-0.58Ω	170-242	0.4
LTC2410-0375TSK	0.375			0.39-0.56Ω	158-245	0.45
LTC2410-0400TSK	0.40			0.30-0.53Ω	203-252	0.4
LTC2410-0500TSK	0.50			0.2-0.3Ω	130-203	1.32
LTC2410-0600TSK	0.60			190-245mΩ	128-210	1.35
LTC2410-0630TSK	0.63			190-245mΩ	120-207	1.37
LTC2410-0700TSK	0.70			157-193mΩ	114-181	1.96
LTC2410-0750TSK	0.75			150-180mΩ	108-147	2.15
LTC2410-0800TSK	0.80			121-172mΩ	103-163	2.25
LTC2410-1100TSK	1.00			75-99mΩ	90-142	2.27
LTC2410-1125TSK	1.25			50-70mΩ	76-116	3.44
LTC2410-1150TSK	1.50			48-68.5mΩ	83-120	6.1
LTC2410-1160TSK	1.60			44-53mΩ	84-117	5.6
LTC2410-1200TSK	2.00			25-41.5mΩ	72-110	9.2
LTC2410-1250TSK	2.50			22-34mΩ	74-104	15.6
LTC2410-1300TSK	3.00			16-24.5mΩ	80-103	20.7
LTC2410-1315TSK	3.15			16-24.5mΩ	68-98	23.1
LTC2410-1350TSK	3.50			14-22mΩ	71-95	28.2
LTC2410-1400TSK	4.00			12-18mΩ	76-105	36.8
LTC2410-1500TSK	5.00			10-14.8mΩ	62-86	60

Part Number	Rated Current (A)	Rated Voltage (V)	Breaking Capacity	DCR (Ω/mΩ)	Voltage drop (mv)	I^2t (A^2 sec)
LTC2410-1600TSK	6.00	250Vac 250Vdc	50A@250V 100A@125V	7-8.9mΩ	61-88	43.2
LTC2410-1630TSK	6.30			6.5-8.7mΩ	48-73	47.6
LTC2410-1700TSK	7.00			7.3-8.8mΩ	54-71	58.8
LTC2410-1800TSK	8.00			6.8-8mΩ	51-70	115.2
LTC2410-2100TSK	10.0	125Vac 125Vdc	100A@125V	4.0-5.3mΩ	51-66	130
LTC2410-2120TSK	12.0			3.6-4.6mΩ	45-73	144
LTC2410-2150TSK	15.0			2.8-3.4mΩ	43-63	225
LTC2410-2160TSK	16.0			2.2-2.85mΩ	40-60	230.4
LTC2410-2200TSK	20.0			1.9-2.6mΩ	45-66	440
LTC2410-2250TSK	25.0	72Vdc 65Vdc 63Vdc 32Vdc 24Vdc	100A@72V	1.3-1.9mΩ	40-61	625
LTC2410-2300TSK	30.0			1.15-1.62mΩ	50-70	720
LTC2410-2350TSK	35.0			1.05-1.35mΩ	38-62	1593
LTC2410-2400TSK	40.0			0.95-1.2mΩ	51-60	1920
LTC2410-2500TSK	50.0			0.7-0.9mΩ	53-69	2250
LTC2410-2600TSK	60.0			0.5-0.7mΩ	40-51	3240

Product Dimensions (mm)/产品尺寸

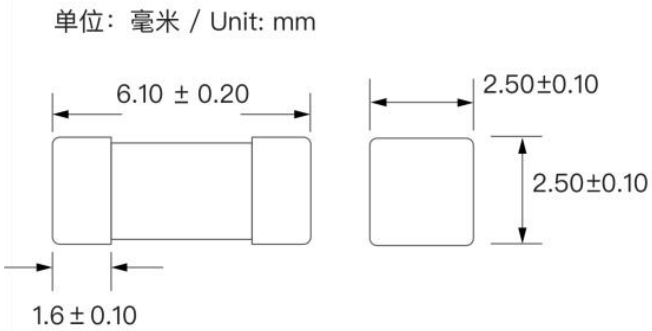

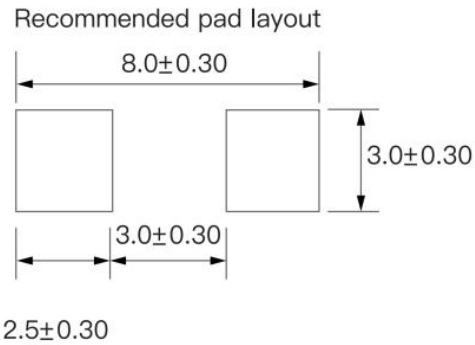

Material Details/材料详情

NO.	Part Name	Material
1	End Caps 铜帽	Gold Plated Brass Cap 铜镀金
2	Body 管体	Non-Transparent Square Cetamic Tube 陶瓷管
3	Fuse element 熔丝	Alloy Wire+Fiber 合金线+纤维线
4	Solder 焊锡	High Temperature Tin 高温焊锡

Product Characteristics/产品特性

1. 外观不应出现显着的污点、裂纹，标识应该容易辨识。
   There shall not be any remarkale stain and crack on the appearances, markings shall be easily legible.
2. 形状：方形陶瓷贴片保险丝
   Confguration: Square ceramic patch fuse
3. 引脚拉力强度/Lead Pull Strength: 10 牛顿 10±1 秒/ 10N for 10±1 Seconds
4. 实验条件/Test Condition: 所有测试环境温度为 25±5℃
   All electrical test is to be conducted with the ambient air at a temperature of 25±5℃.
5. 温度上升试验/Rising Temperature Test:
   温度上升试验：通 1.0 倍额定电流，当温度稳定时(5 分钟测量 4 次，且每次测量值与平均值相差不超过 2℃)。测得熔断体任何部位的温升不得超过 135℃,周围环境温度为 25±5℃。
   When the 100%times of rating electric current passes the fuse, After reaching thermal balance, the temperature on the fuse surface rising is not higher than 135℃ Rising temperature= The surface temperature-Ambient.

Environmental Characteristic/环境温度特性图

Temperature Rerating Curve

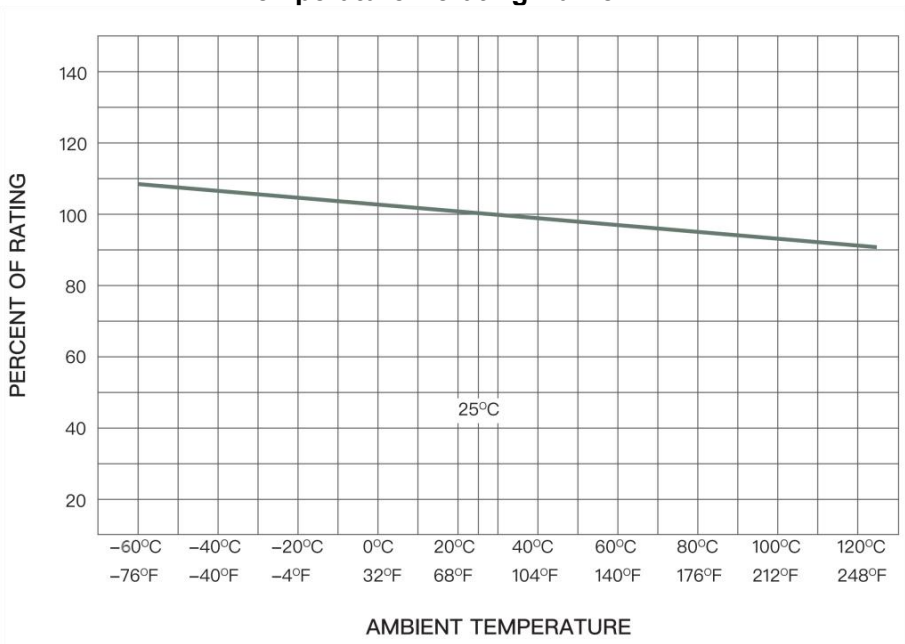

■使用温度范围/ Operating Temperature: -55℃ ~ +125℃。

■保存条件/Stock Condition: 温度在 10℃~40℃，相对湿度≤75%平均可以存放 2 年。
Can be stored for 2 years under tight seal condition at temperature of 10℃~40℃,relative humidity ≤75%

■若操作环境温度超出 25±5℃范围，在选用保险丝规格时，需考虑操作环境温度对保险丝的影响，请参照 Temperature Rerating Curve。
When choosing the fuse's specifcation, if the operating environmental temperature beyond the scope from 20~30℃, engineer should consider theenvironmental temperature's affection to fuses. Please refer the Temperature Rerating Curve.

Average Time-Current Curve

LTC2410TSK Series I-T Curve 500mA~6.3A

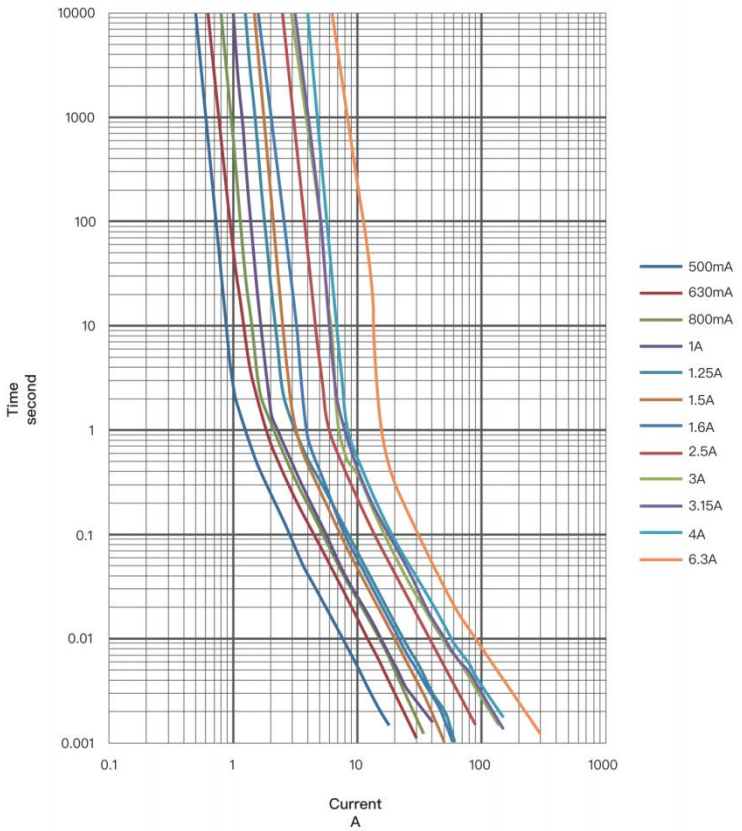

LTC2410TSK Series I-T Curve 7A~40A

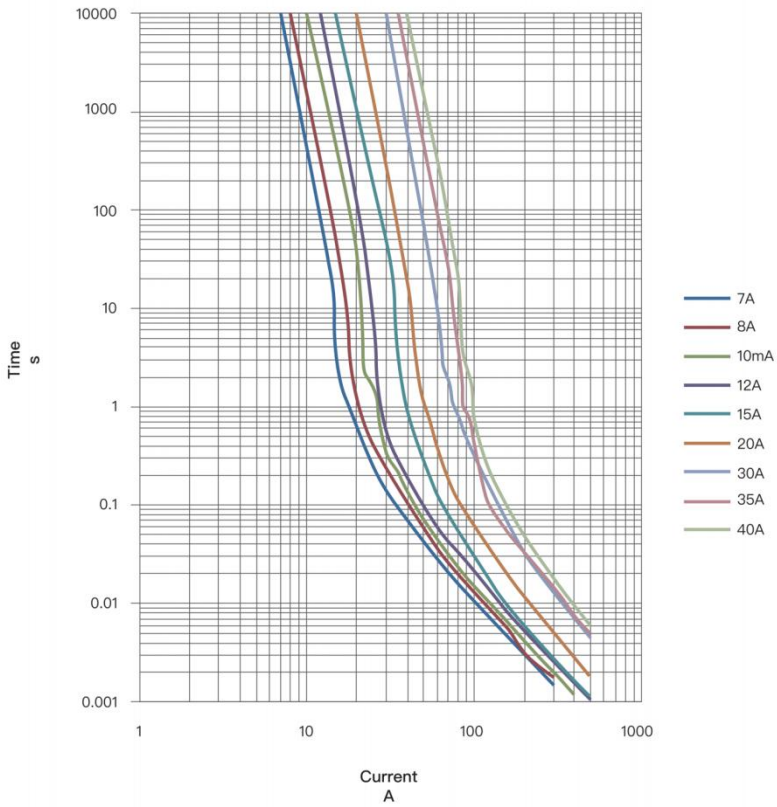

Soldering Parameters/焊接参数

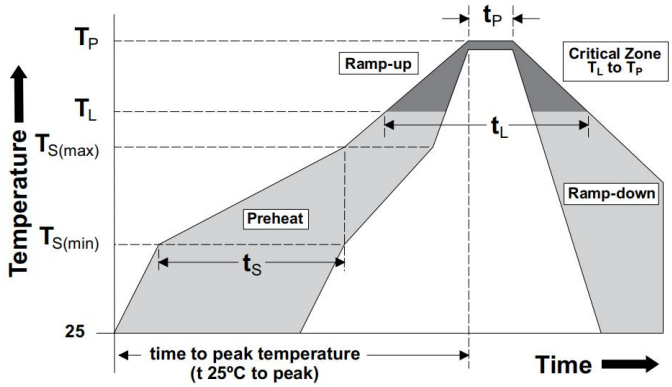

Soldering Method		Parameter
Wave/Reflow Solder	Solder paste process	
	Solder Pot Temperature	260℃ max.
	Solder Dwell Time	10 seconds max.
Hand-solder	Solder Iron Temperature	300±5℃ max.
	Heating Time	3 seconds max.

Profile Feature 特征		Pb-Free Assembly 无铅焊锡
Average Ramp-Up Rate ($T_{s(max)}$to T_p) 平均升温速度		3℃/second max
Preheat 预热	-Temperature Min($T_{s(min)}$) 最低温度	150℃
	-Temperature Max($T_{s(max)}$) 最高温度	200℃
	-Time($T_{(smin)}$ to $T_{(smax)}$) 预热时间	60~120 seconds
Reflow 回流焊	-Temperature(T_L) 温度	217℃
	-Time(t_L) 时间	20~40 seconds
Peak Temperature (T_p) 峰值温度		250℃
Time within 5℃ of actul Peak Temperature 实际峰值温度(Tp)的±5℃范围内的时间		5 seconds
Ramp-Down Rate 降温		6℃/second max
Time 25℃ to Peak Temperature 从 25℃到峰值温度时间		8 minutes max

Packing/包装

Part Number	Quantity & Packaging Code
LTC2410TSK	1500 pcs/reel

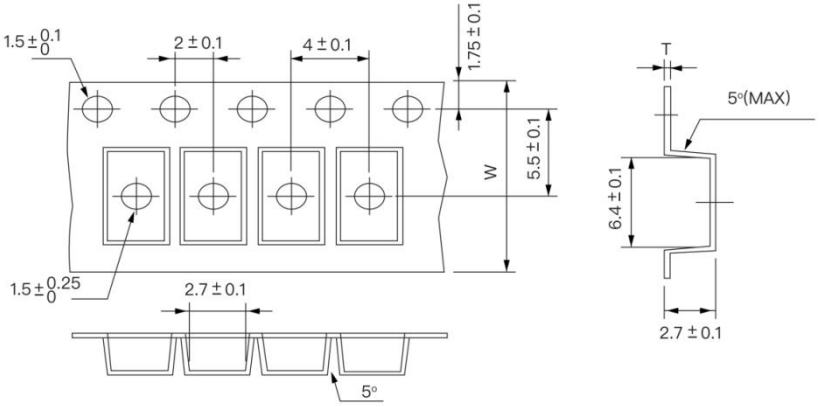

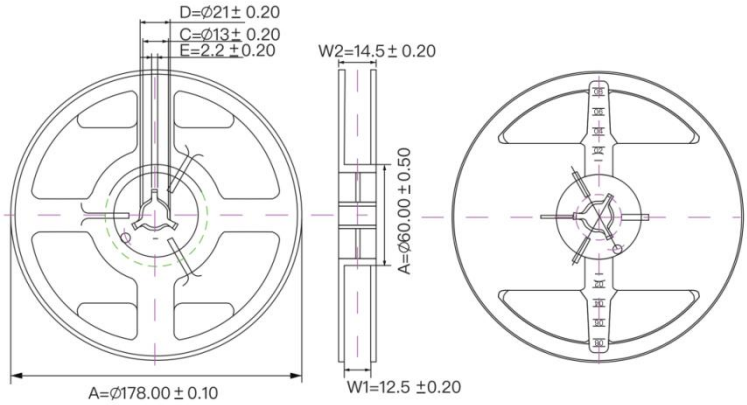
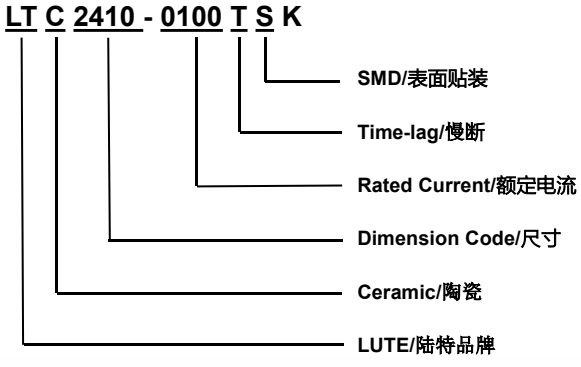
Part Number System/产品编号