ES2KF

Surface Mount Superfast Recovery Rectifier

Reverse Voltage – 800 V

Forward Current – 2 A

FEATURES

- For surface mounted applications
- Low profile package
- Glass Passivated Chip Junction
- Superfast reverse recovery time
- Lead free in comply with EU RoHS 2011/65/EU directives

MECHANICAL DATA

- Case: SMAF
- Terminals: Solderable per MIL-STD-750, Method 2026
- Approx. Weight: 27mg / 0.00095oz

Absolute Maximum Ratings and Characteristics

Ratings at 25 °C ambient temperature unless otherwise specified. Single phase, half wave, 60 Hz, resistive or inductive load. For capacitive load, derate current by 20%.

Parameter	Symbols	ES2KF	Units
Maximum Repetitive Peak Reverse Voltage	V_{RRM}	800	V
Maximum RMS voltage	V_{RMS}	560	V
Maximum DC Blocking Voltage	V_{DC}	800	V
Maximum Average Forward Rectified Current	$I_{F(AV)}$	2	A
Peak Forward Surge Current 8.3 ms Single Half Sine Wave Superimposed on Rated Load (JEDEC Method)	I_{FSM}	50	A
Maximum Forward Voltage at 2 A	V_F	2.20	V
Maximum DC Reverse Current at Rated DC Blocking Voltage Ta = 25 °C Ta =125 °C	I_R	5 100	μA
Typical Junction Capacitance at V_R=4V, f=1MHz	C_j	20	pF
Maximum Reverse Recovery Time (1)	t_{rr}	35	ns
Typical Thermal Resistance (2)	$R_{\theta JA}$	75	°C/W
Operating and Storage Temperature Range	T_j, T_{stg}	-55 ~ +150	°C

(1) Measured with I_F = 0.5 A, I_R = 1 A, I_{rr} = 0.25 A.

(2) P.C.B. mounted with 1.0 X 1.0" (2.54 X 2.54 cm) copper pad areas.

Fig.1 Reverse Recovery Time Characteristic And Test Circuit Diagram

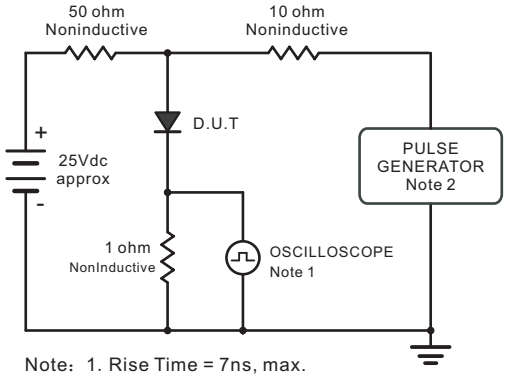

Note: 1. Rise Time = 7ns, max.
Input Impedance = 1megohm,22pF.
2. Ries Time =10ns, max.
Source Impedance = 50 ohms.

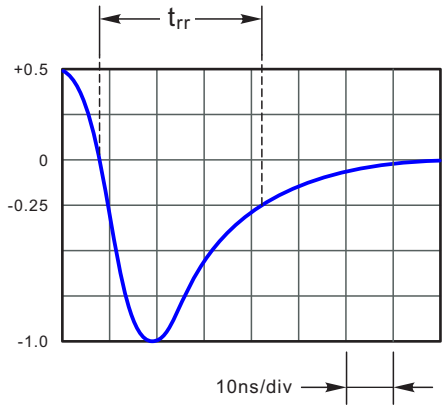

Set time Base for 10ns/div

Fig.2 Maximum Average Forward Current Rating

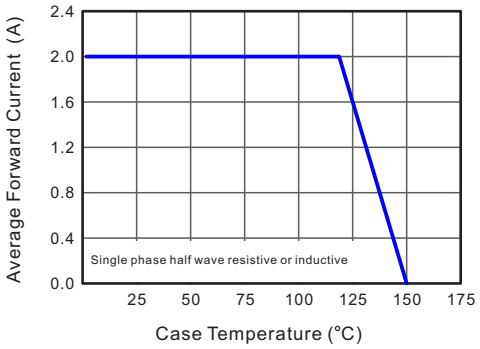

Fig.3 Typical Reverse Characteristics

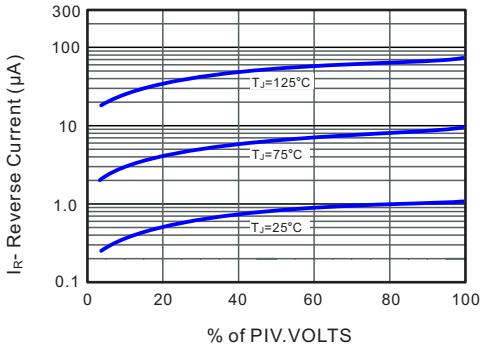

Fig.4 Typical Forward Characteristics

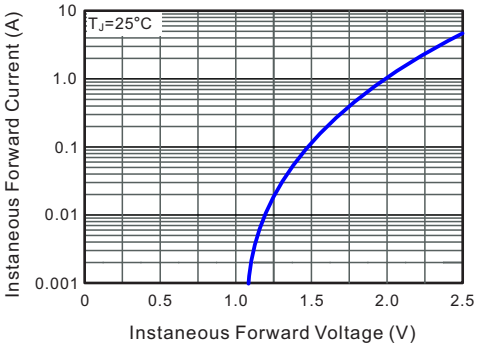

Fig.5 Typical Junction Capacitance

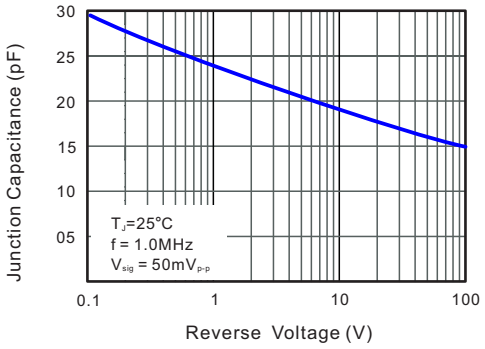

Fig.6 Maximum Non-Repetitive Peak Forward Surage Current

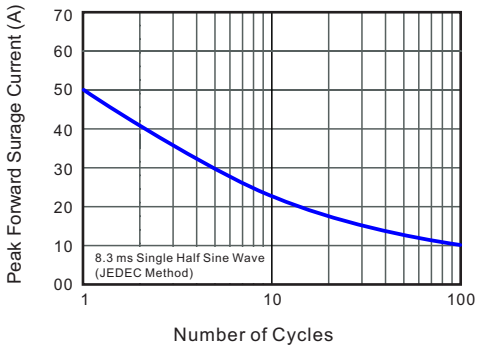

PACKAGE OUTLINE

Plastic surface mounted package; 2 leads

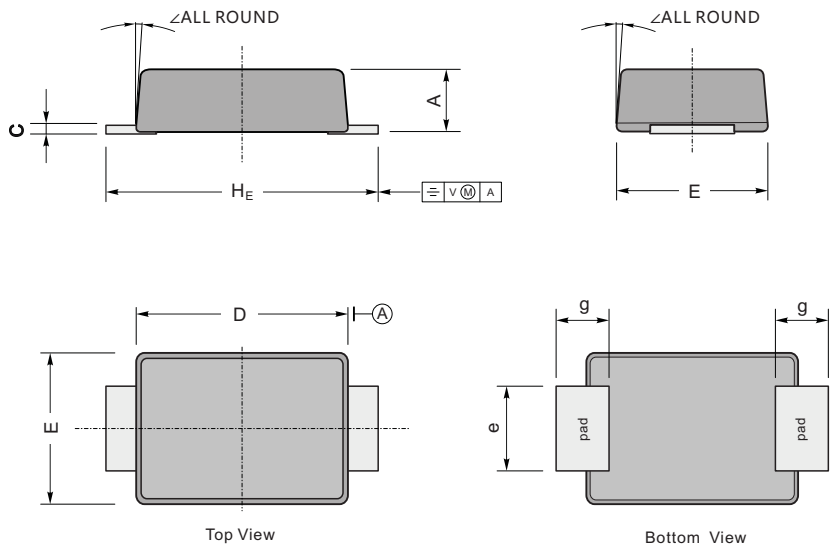

UNIT		A	C	D	E	e	g	H_E	∠
mm	max	1.2	0.20	3.7	2.7	1.6	1.2	4.9	7°
	min	0.9	0.12	3.3	2.4	1.3	0.8	4.4	
mil	max	47	7.9	146	106	63	47	193	
	min	35	4.7	130	94	51	31	173	

The recommended mounting pad size

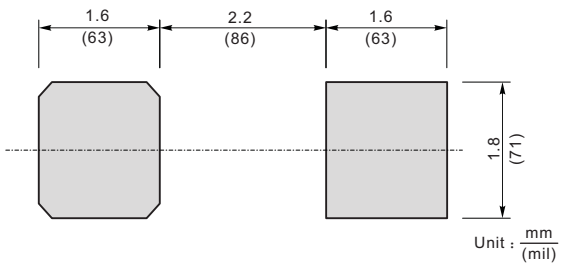

Marking

Type number	Marking code
ES2KF	ES2K