Operation:SMT/贴片式　无柄覆膜&中小型　轻触开关　[操作力可定制]

LTEM NO.: TS-1187M-26Q　(Series)

(L5.20mm×W5.20mm　TACT-SWITCH)

表面贴装 SMT
正向操作 DOWN
精密部品 NICETY
可靠 STABILIZE
適合環保 RoHS



邀您使用(微信)小程序
硕方电子开关&连接器选型手册
手机扫码即可进入...

Material declaration

No.	NAME	Description
① A	基座	LCP 30%(Gray)耐高温塑胶 UL94V-0
② B	簧片	镀银&不锈钢 SUS304
③ C	覆膜	KTC 聚酰亚胺 Polyimide
④ D	盖板	不锈钢 SUS301-3/4H(t=0.15mm)
⑤ E	嵌件	C5191R-H (t=0.20mm)镀银磷铜

Technical parameter

PROJECT \ LEVEL		A[better product]	B[average product]
Electrical Properties	Contact Rating	25mA, 24V DC	
	Initial Contact Resistance	50mΩ max.	
	Insulation Resistance	100MΩ min.500V DC	Skey/PD：100MΩ min.300V DC
	Withstand Voltage	300V AC for 1 minute	250 V AC for 1 minut
Durable Performance	There No Load	150,000 Cycles	100,000 Cycles
	Rated Load	125,000 Cycles	85,000 Cycles
Sterage temp.		-35℃～+75℃(Operating Temp:)	
Operating Force		1.6 / 2.6N.(1N.=100gram-force)	
Heat Rrsistance		IR Reflow:255℃,5sec. Manual:350℃,3sec.	

CIRCUIT DIAGRAM

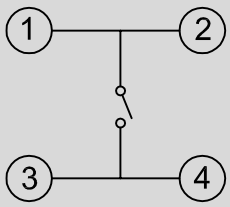

Unit:mm

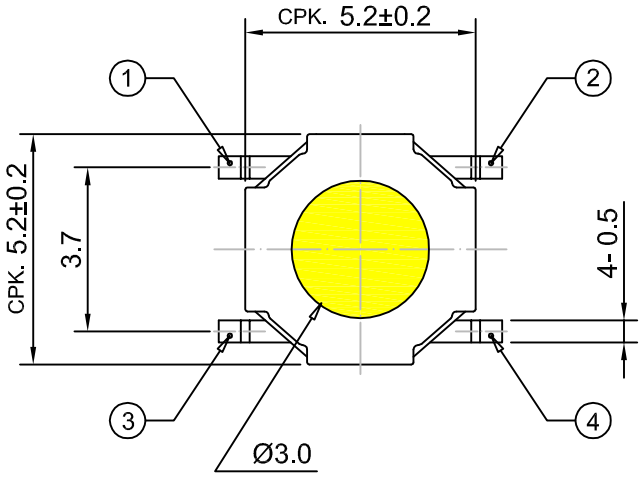

P.C.B LAYOUT

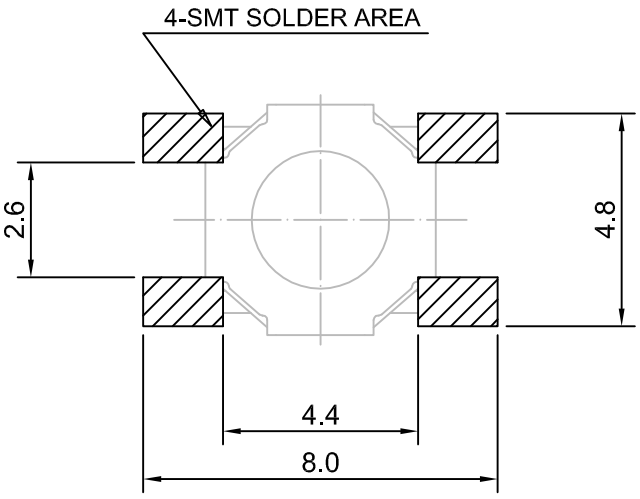

DECIMALS	ANGLES
.X :±0.20	X.° :±1.5°
.XX :±0.10	X.X° :±1.0°
.XXX :±0.05	.XXX° :±0.5°

