# SWITCHES

硕方精密電子開關 www.Sofng.com

**Operation:**DIP/卧式 中型 轻触开关 [柄长可定制]

# LTEM NO.: TS-1102N-XX XXQ (Series)

(L6.0×W6.0 TACT-SWITCH)

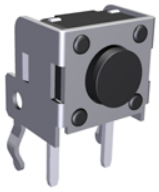

邀您使用(微信)小程序
硕方电子开关&连接器选型手册
手机扫码即可进入...

表面插装 DIP
侧向操作 LATERAL
精密部品 NICETY
可靠 STABILIZE
適合環保 RoHS

## Material declaration

| No. | NAME | Description |
|---|---|---|
| ① A | 拨柄 | PA6T (Black)热塑性 |
| ② B | 基座 | PA6T (Black)热塑性 |
| ③ C | 盖板 | 不锈钢 Q235-A |
| ④ D | 簧片 | 镀银&磷青铜 C5191/不锈钢 SUS304 |
| ⑤ E | 嵌件 | 镀银&C5191R-H 磷青铜[镀锡] |

## Technical parameter

| PROJECT \ LEVEL | | A[better product] | B[average product] |
|---|---|---|---|
| Electrical Properties | Contact Rating | 25mA, 24V DC | |
| | Initial Contact Resistance | 50mΩ max. | |
| | Insulation Resistance | 100MΩ min.500V DC Skey/PD：100MΩ min.300V DC | |
| | Withstand Voltage | 500V AC for 1 minute | 350 V AC for 1 minut |
| Durable Performance | There No Load | 115,000 Cycles | 100,000 Cycles |
| | Rated Load | 100,000 Cycles | 85,000 Cycles |
| Sterage temp. | | -40℃～+85℃(Operating Temp: ) | |
| Operating Force | | 1.6 / 2.6N.(1N.=100gram-force) | |
| Heat Rrsistance | | IR Reflow:255℃,5sec. Manual:350℃,3sec. | |

## CIRCUIT DIAGRAM

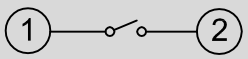


Unit:mm

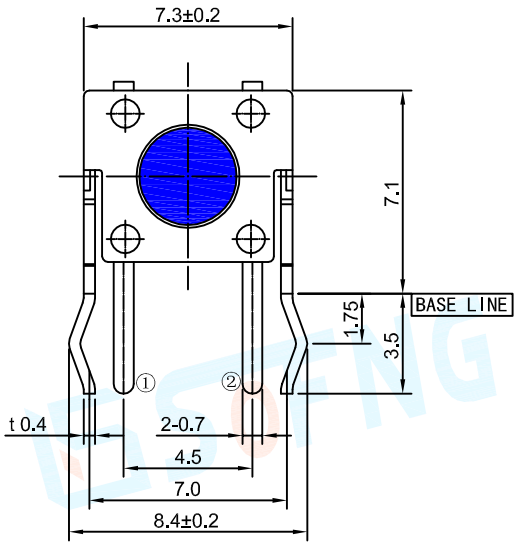


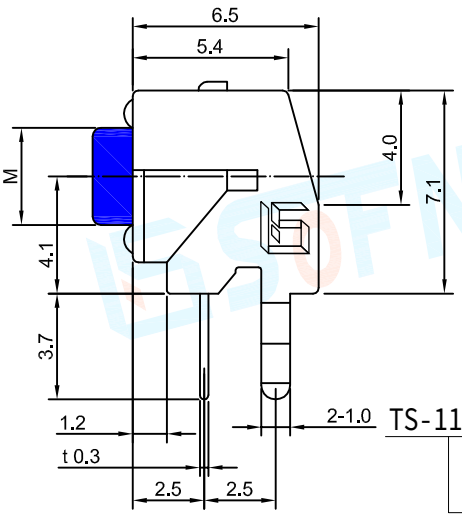


| H | M |
|---|---|
| 4.3 | 3.5 |
| 5.0 | 3.5 |
| 5.5 | 3.5 |
| 6.0 | 3.4 |
| 6.5 | 3.4 |
| 7.0 | 3.3 |
| ~9.5 | 3.3 |
| 10.0 | 3.0 |
| ~16.0 | 3.0 |

TS-1102N - XX XXQ
力度 16Q=160gf 26Q=260gf
高度 43=4.3mm 160=16.0mm
产品型号

