SWITCHES

硕方精密電子開關 www.Sofng.com

Operation:DIP/卧式 中型 轻触开关 [柄长可定制]

LTEM NO.: TS-1102N-XX XXQ (Series)

(L6.0×W6.0 TACT-SWITCH)

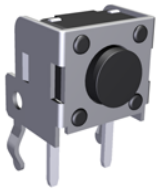

邀您使用(微信)小程序
硕方电子开关&连接器选型手册
手机扫码即可进入...

表面插装 DIP
侧向操作 LATERAL
精密部品 NICETY
可靠 STABILIZE
適合環保 RoHS

Material declaration

No.	NAME	Description
① A	拨柄	PA6T (Black)热塑性
② B	基座	PA6T (Black)热塑性
③ C	盖板	不锈钢 Q235-A
④ D	簧片	镀银&磷青铜 C5191/不锈钢 SUS304
⑤ E	嵌件	镀银&C5191R-H 磷青铜[镀锡]

Technical parameter

PROJECT \ LEVEL		A[better product]	B[average product]
Electrical Properties	Contact Rating	25mA, 24V DC	
	Initial Contact Resistance	50mΩ max.	
	Insulation Resistance	100MΩ min.500V DC Skey/PD：100MΩ min.300V DC	
	Withstand Voltage	500V AC for 1 minute	350 V AC for 1 minut
Durable Performance	There No Load	115,000 Cycles	100,000 Cycles
	Rated Load	100,000 Cycles	85,000 Cycles
Sterage temp.		-40℃～+85℃(Operating Temp:)	
Operating Force		1.6 / 2.6N.(1N.=100gram-force)	
Heat Rrsistance		IR Reflow:255℃,5sec. Manual:350℃,3sec.	

CIRCUIT DIAGRAM

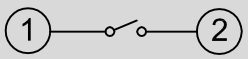

Unit:mm

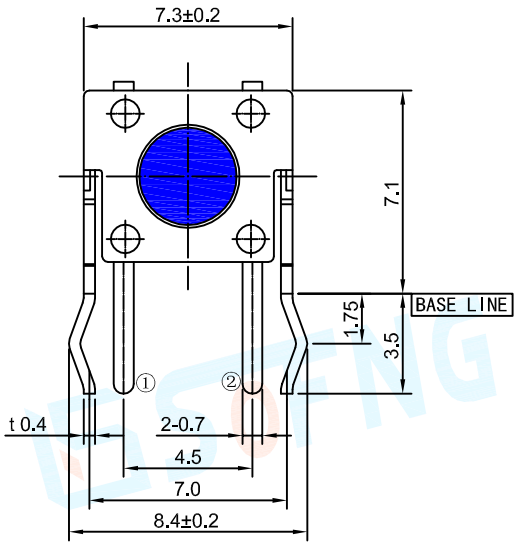

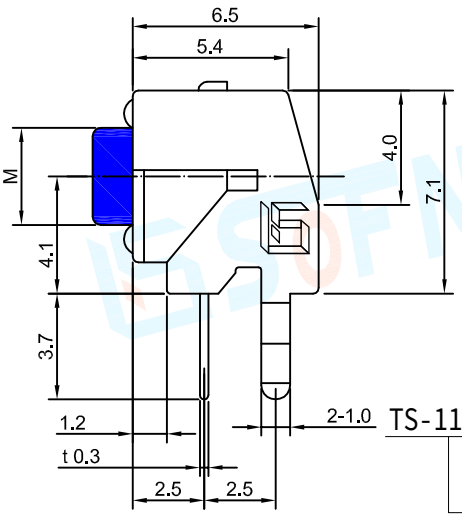

H	M
4.3	3.5
5.0	3.5
5.5	3.5
6.0	3.4
6.5	3.4
7.0	3.3
~9.5	3.3
10.0	3.0
~16.0	3.0

TS-1102N - XX XXQ
力度 16Q=160gf 26Q=260gf
高度 43=4.3mm 160=16.0mm
产品型号

