FEATURES

- Epitaxial planar die construction
- Complementary NPN Type available (MMBT2222A)

SOT-23

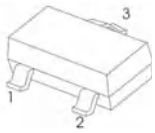

2F

1.BASE
2.EMITTER
3.COLLECTOR

MAXIMUM RATINGS AND ELECTRICAL CHARACTERISTICS

MAXIMUM RATINGS (Ta=25℃ unless otherwise noted)

Parameter	Symbol	Value	Unit
Collector–Base Voltage	V_{CBO}	-60	V
Collector–Emitter Voltage	V_{CEO}	-60	V
Emitter–Base Voltage	V_{EBO}	-5	V
Collector Current — Continuous	I_C	-600	mA
Total Device Dissipation	P_D	250	mW
Thermal Resistance From Junction To Ambient	R_{thJA}	500	℃/W
Operation Junction and Storage Temperature Range	T_J, T_{stg}	-55~+150	℃

CLASSIFICATION OF hFE(1)

HFE	100-300	
RANK	L	H
RANGE	100-200	200-300

ELECTRICAL CHARACTERISTICS (TA = 25°C unless otherwise noted.)

Parameter	Symbol	Test conditions	Min	Typ	Max	Unit
Collector-base breakdown voltage	$V_{(BR)CBO}$	I_C =-10uA, I_E = 0	-60			V
Collector-emitter breakdown voltage	$V_{(BR)CEO}$	I_C =-10mA, I_B = 0	-60			V
Emitter-base breakdown voltage	$V_{(BR)EBO}$	I_E =-10uA, I_C = 0	-5			V
Collector cut-off current	I_{CBO}	V_{CB} =-50V, I_E = 0			-20	nA
Base cut-off current	I_{EBO}	V_{EB} =-3V, I_C = 0			-10	nA
Collector cut-off current	I_{CEX}	V_{CE} =-30V, V_{BE}=-0.5V			-50	nA
DC current gain	h_{FE1}	V_{CE} =-10V, I_C =-150mA	100		300	
	h_{FE2}	V_{CE} =-10V, I_C =-0.1mA	75			
	h_{FE3}	V_{CE} =-10V, I_C =-1mA	100			
	h_{FE4}	V_{CE} =-10V, I_C =-10mA	100			
	h_{FE5}	V_{CE} =-10V, I_C =-500mA	50			
Collector-emitter saturation voltage	$V_{CE(sat)}$	I_C =-150mA, I_B =-15mA			-0.4	V
	$V_{CE(sat)}$	I_C =-500mA, I_B =-50mA			-1.6	V
Base-emitter saturation voltage	$V_{BE(sat)}$	I_C =-150mA, I_B =-15mA			-1.3	V
	$V_{BE(sat)}$	I_C =-500mA, I_B =-50mA			-2.6	V
Transition frequency	f_T	V_{CE}=-20V,I_C=-50mA,f=100MHz	200			MHz
Delay time	t_d	V_{CE} =-30V, I_C =-150mA,I_{B1}=-15mA			10	ns
Rise time	t_r				25	ns
Storage time	t_s	V_{CE} =-6V, I_C =-150mA I_{B1}=-I_{B2}=-15mA			225	ns
Fall time	t_f				60	ns

RATING AND CHARACTERISTIC CURVES

Fig.1 Static characteristics

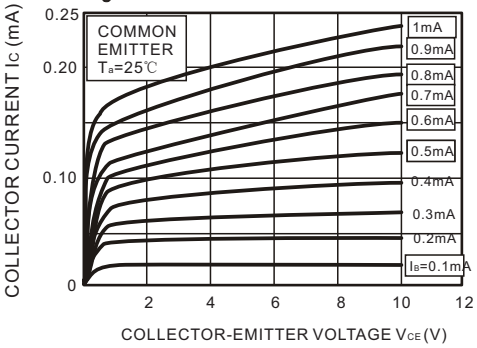

Fig.2 Pc —— Ta

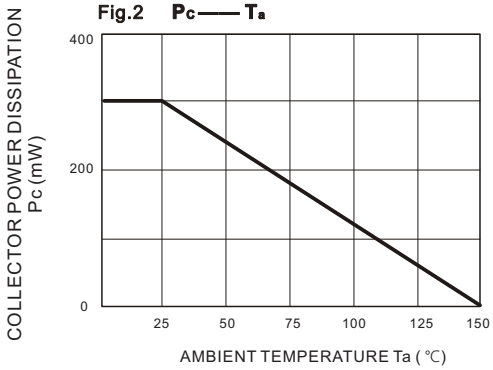

Fig.3 Cob / Cib —— VCB / VEB

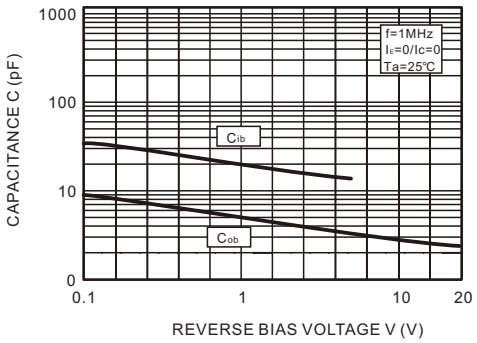

Fig.4 VCEsat —— Ic

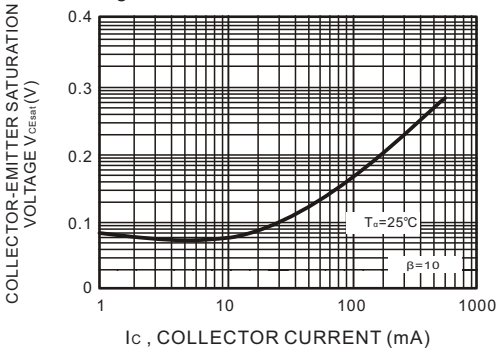

Fig.5 hFE--Ic

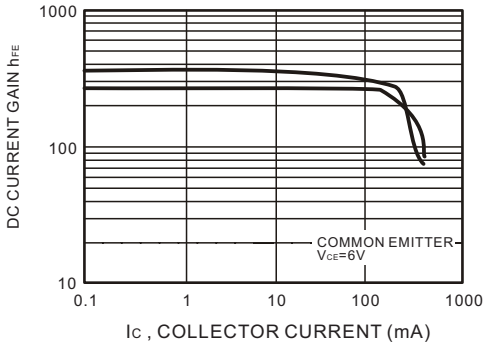

Fig.6 VBEsat —— Ic

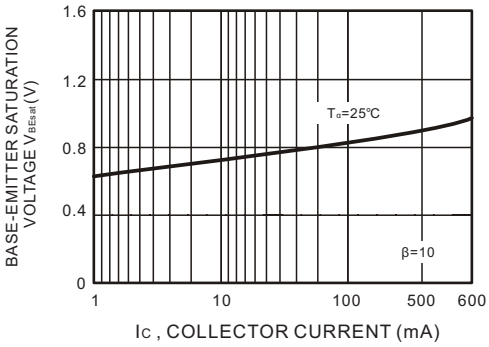

Fig.7 Ic —— VBE

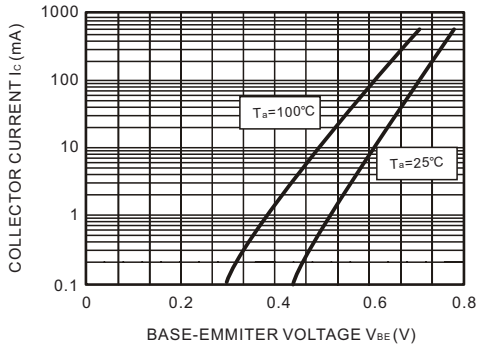

Fig.8 fT —— Ic

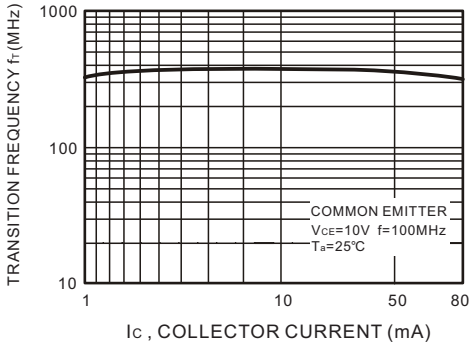

Soldering parameters

Reflow Condition		Pb-Free assembly (see as bellow)
Pre Heat	-Temperature Min ($T_{s(min)}$)	+150℃
	-Temperature Max($T_{s(max)}$)	+200℃
	-Time (Min to Max) (ts)	60-180 secs.
Average ramp up rate (Liquid us Temp (T_L) to peak)		3℃/sec. Max
$T_{s(max)}$ to T_L - Ramp-up Rate		3℃/sec. Max
Reflow	-Temperature(T_L)(Liquid us)	+217℃
	-Temperature(t_L)	60-150 secs.
Peak Temp (T_p)		+260(+0/-5)℃
Time within 5℃ of actual Peak Temp (t_p)		30 secs. Max
Ramp-down Rate		6℃/sec. Max
Time 25℃ to Peak Temp (T_P)		8 min. Max
Do not exceed		+260℃

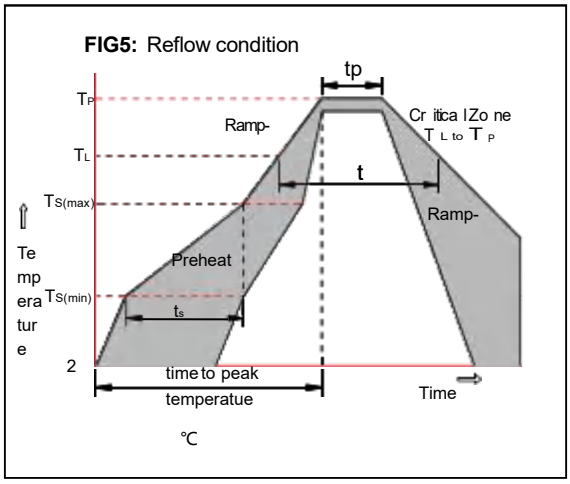

Package Dimensions & Suggested Pad Layout

SOT23

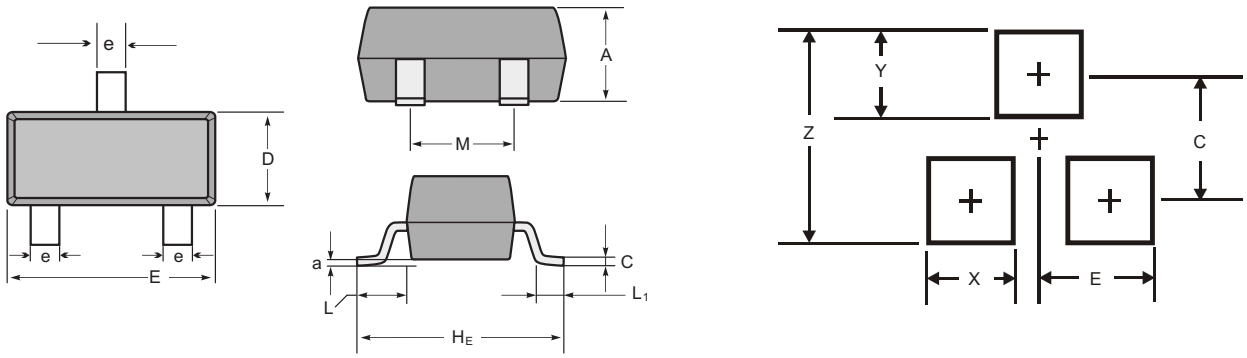

SOT-23 mechanical data

UNIT		A	C	D	E	H_E	e	M	L	L_1	a
mm	max	1.1	0.15	1.4	3.0	2.6	0.5	1.95	0.55 (ref)	0.36 (ref)	0.0
	min	0.9	0.08	1.2	2.8	2.2	0.3	1.7			0.15
mil	max	43	6	55	118	102	20	77	22 (ref)	14 (ref)	0.0
	min	35	3	47	110	87	12	67			6

Dimensions	SOT23
Z	2.9
X	0.8
Y	0.9
C	2.0
E	1.35

Tape & rell specification

Tape

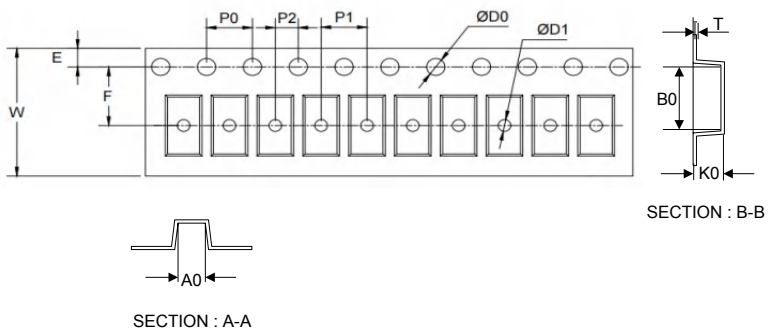

Symbol	Dimension (mm)
P0	4.00±0.10
P1	4.00±0.10
P2	2.00±0.10
D0	1.55±0.10
D1	1.05±0.10
E	1.55±0.10
F	3.60±0.10
W	8.00±0.10
A0	3.80±0.20
B0	3.25±0.20
K0	1.45±0.10
T	0.25±0.05

7” Reel

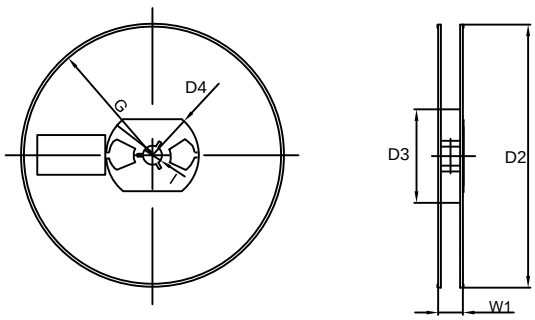

D2	178.0±3.0
D3	55Min.
D4	R24.0±3.0
G	R82.0±3.0
I	13.0±2.0
W1	11.0±3.0
Quantity: 3000PCS	