Description：

This P-Channel MOSFET uses advanced trench technology and design to provide excellent $R_{DS(on)}$ with low gate charge.

It can be used in a wide variety of applications.

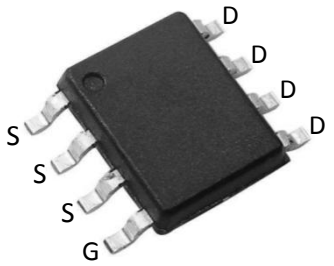

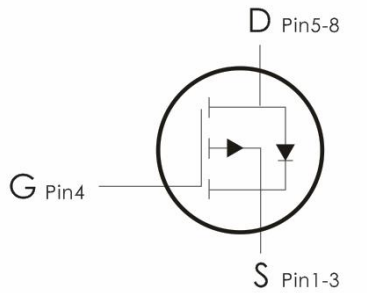

Features：

1) V_{DS}=-30V,I_D=-10A,$R_{DS(ON)}$<15mΩ @V_{GS}=-10V（Typ：12mΩ）
2) Low gate charge.
3) Green device available.
4) Advanced high cell denity trench technology for ultra low $R_{DS(ON)}$.
5) Excellent package for good heat dissipation.
6) MSL3

Package Marking and Ordering Information：

Part NO.	Marking	Package	Packing
DO4407	4407	SOP-8	3000 pcs/Reel

Absolute Maximum Ratings： (T_A=25℃ unless otherwise noted)

Symbol	Parameter	Ratings	Units
V_{DS}	Drain-Source Voltage	-30	V
V_{GS}	Gate-Source Voltage	±20	V
I_D	Continuous Drain Current-T_A=25℃	-10	A
	Continuous Drain Current-T_C=100℃	-7	
I_{DM}	Drain Current-Pulsed [1]	-50	A
E_{AS}	Single pulse avalanche energy[2]	47	mJ
P_D	Power Dissipation	4	W
T_J, T_{STG}	Operating and Storage Junction Temperature Range	-55 to +150	℃

Thermal Characteristics：

Symbol	Parameter	Max	Units
$R_{\theta JA}$	Thermal Resistance,Junction to Ambient [3]	30	℃/ W

Electrical Characteristics: (T_A=25℃ unless otherwise noted)

Symbol	Parameter	Conditions	Min	Typ	Max	Units
Off Characteristics						
BV_{DSS}	Drain-Sourtce Breakdown Voltage	V_{GS}=0V,I_D=250μA	-30	---	---	V
I_{DSS}	Zero Gate Voltage Drain Current	V_{GS}=0V, V_{DS}=-10V	---	---	-1	μA
I_{GSS}	Gate-Source Leakage Current	V_{GS}=±20V, V_{DS}=0A	---	---	±100	nA
On Characteristics						
$V_{GS(th)}$	Gate-Source Threshold Voltage	V_{GS}=V_{DS}, I_D=250μA	-1	-1.65	-2.5	V
$R_{DS(ON)}$	Drain-Source On Resistance[4]	V_{GS}=-10V,I_D=-10A	---	12	15	mΩ
		V_{GS}=-4.5V,I_D=-5A	---	17	23	
Dynamic Characteristics						
C_{iss}	Input Capacitance	V_{DS}=-15V, V_{GS}=0V, f=1MHz	---	1250	---	pF
C_{oss}	Output Capacitance		---	159	---	
C_{rss}	Reverse Transfer Capacitance		---	145	---	
Switching Characteristics						
$t_{d(on)}$	Turn-On Delay Time	V_{DD}=-15V, V_{GS}=-10V RL=1Ω,R_{GEN}=3Ω	---	17	---	ns
t_r	Rise Time		---	21	---	ns
$t_{d(off)}$	Turn-Off Delay Time		---	54	---	ns
t_f	Fall Time		---	41	---	ns
Q_g	Total Gate Charge	V_{DS}=-15V , V_{GS}=-10V , I_D=-10A	---	26	---	nC
Q_{gs}	Gate-Source Charge		---	5	---	nC
Q_{gd}	Gate-Drain "Miller" Charge		---	4	---	nC
Drain-Source Diode Characteristics						
V_{SD}	Diode Forward Voltage	V_{GS}=0V,I_S=-10A	---	-0.75	-1	V
Is	Maximum Continuous Drain to Source Diode Forward Current	V_G=V_D=0V	---	---	-10	A
I_{SM}	Max. Pulsed Forward Currentt	V_G=V_D=0V	---	---	-50	A
Trr	ReverseRecoveryTime	V_{GS}=0V，I_S=-10A di/dt=100A/μs	---	32	---	ns
Qrr	ReverseRecoveryCharge		---	28	---	nc

Notes: 1. Repetitive Rating: Pulse Width Limited by Maximum Junction Temperature.

2. E_{AS} condition: Starting T_J=25C, V_{DD}=30V, V_G=10V, R_G=25ohm, L=0.5mH, I_{AS}=13.5A, V_{DD}=0V during time in avalanche.

3. $R_{\theta JA}$ is measured with the device mounted on a 1inch^2 pad of 2oz copper FR4 PCB.

4. Pulse Test: Pulse Width≤300μs, Duty Cycle≤0.5%.

Typical Characteristics: (T_A=25℃ unless otherwise noted)

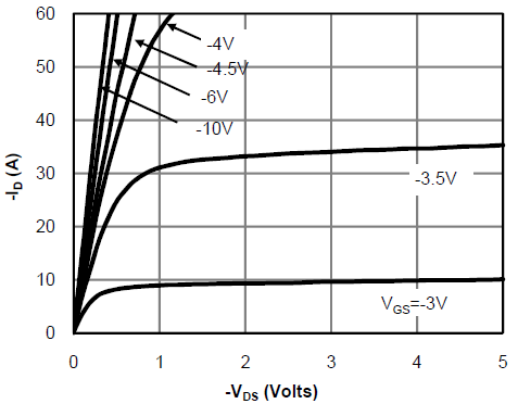

Figure 1. On-Regin Characteristics

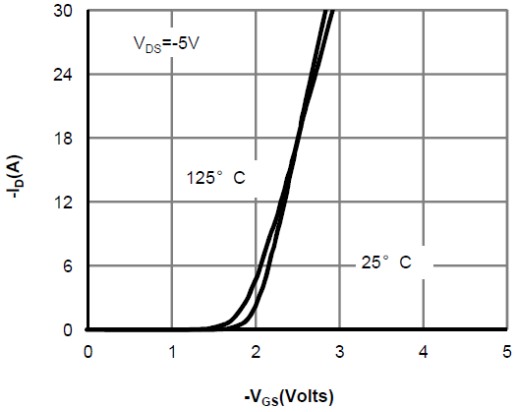

Figure 2. Transfer Characteristics

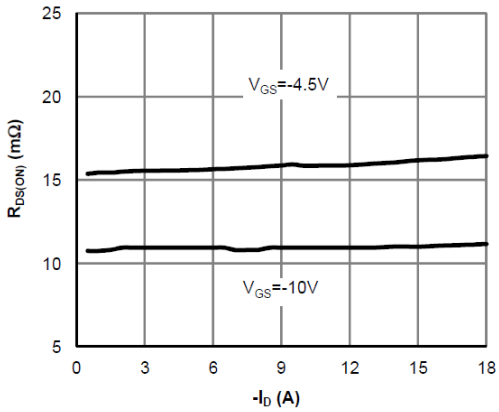

Figure 3. On-Resistance vs. Drain Current and Gate Voltage

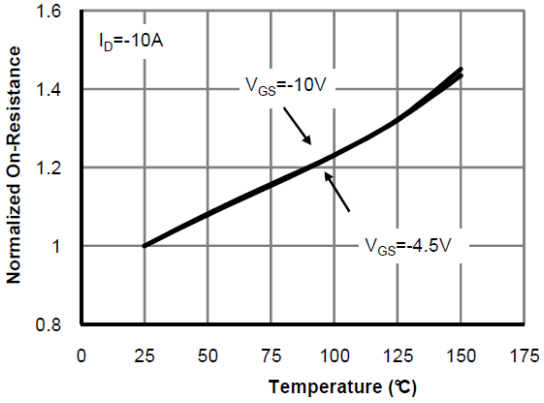

Figure 4. On-Resistance vs. Junction Temperature

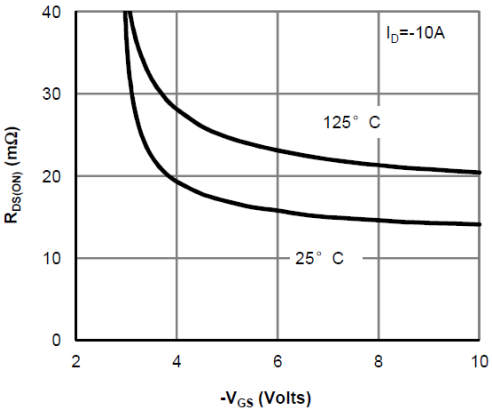

Figure 5. On-Resistance vs. Gate-Source Voltage

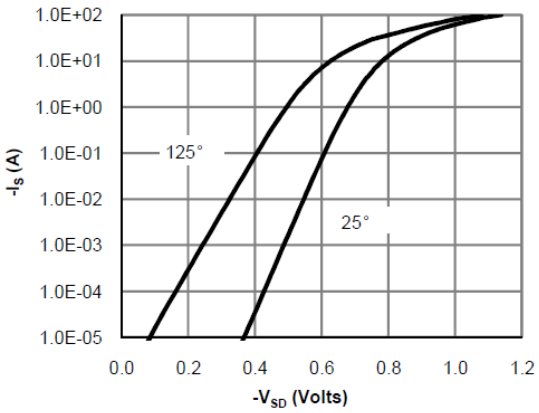

Figure 6 Body Diode Characteristics

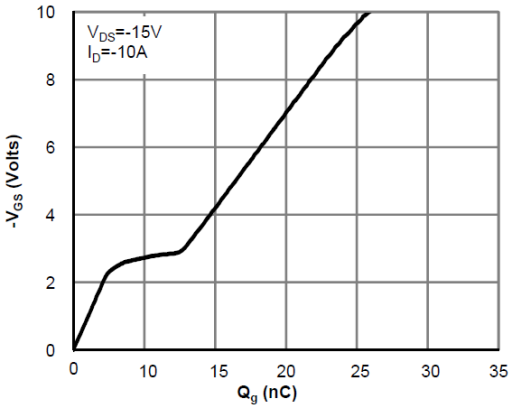

Figure 7. Gate-Charge Characteristics

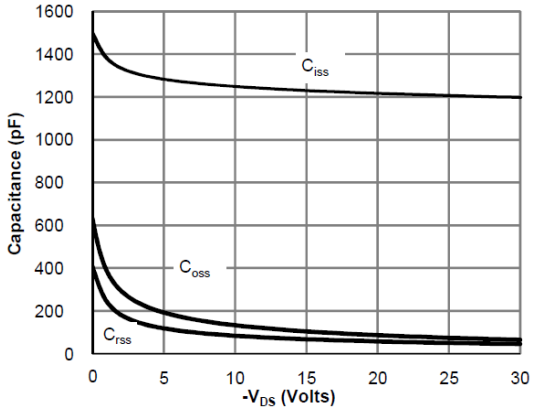

Figure 8. Capacitance Characteristics

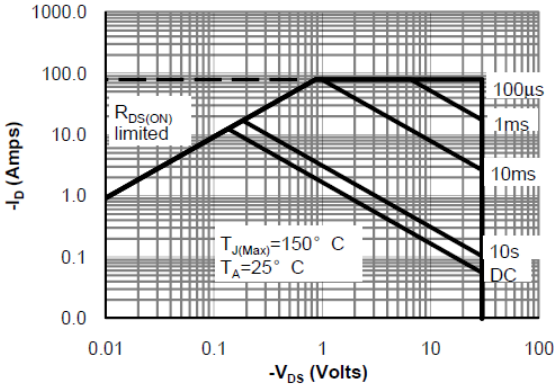

Figure 9. Maximum Forward Biased Safe Operating Area

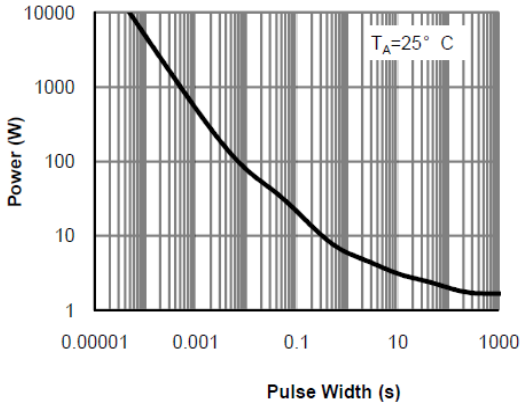

Figure 10. Single Pulse Power Rating Junction to Ambient

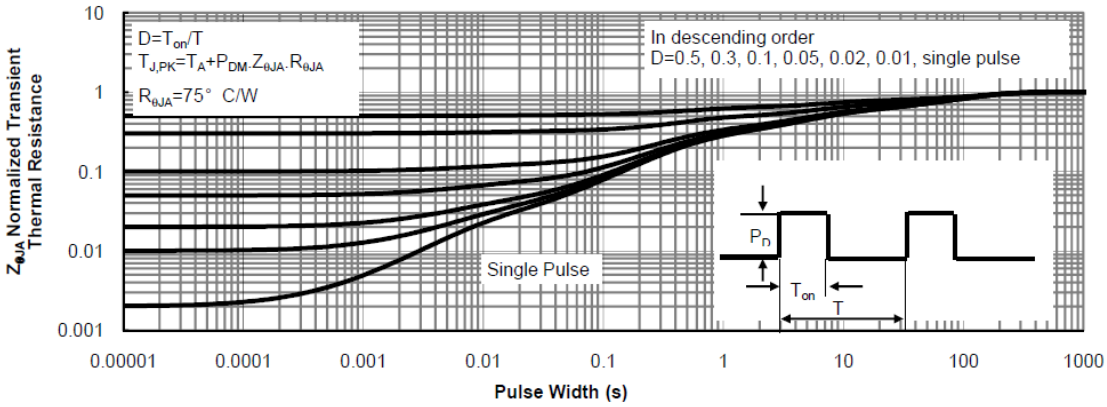

Figure 11. Normalized Maximum Transient Thermal Impedance

SOP-8 Package Information：

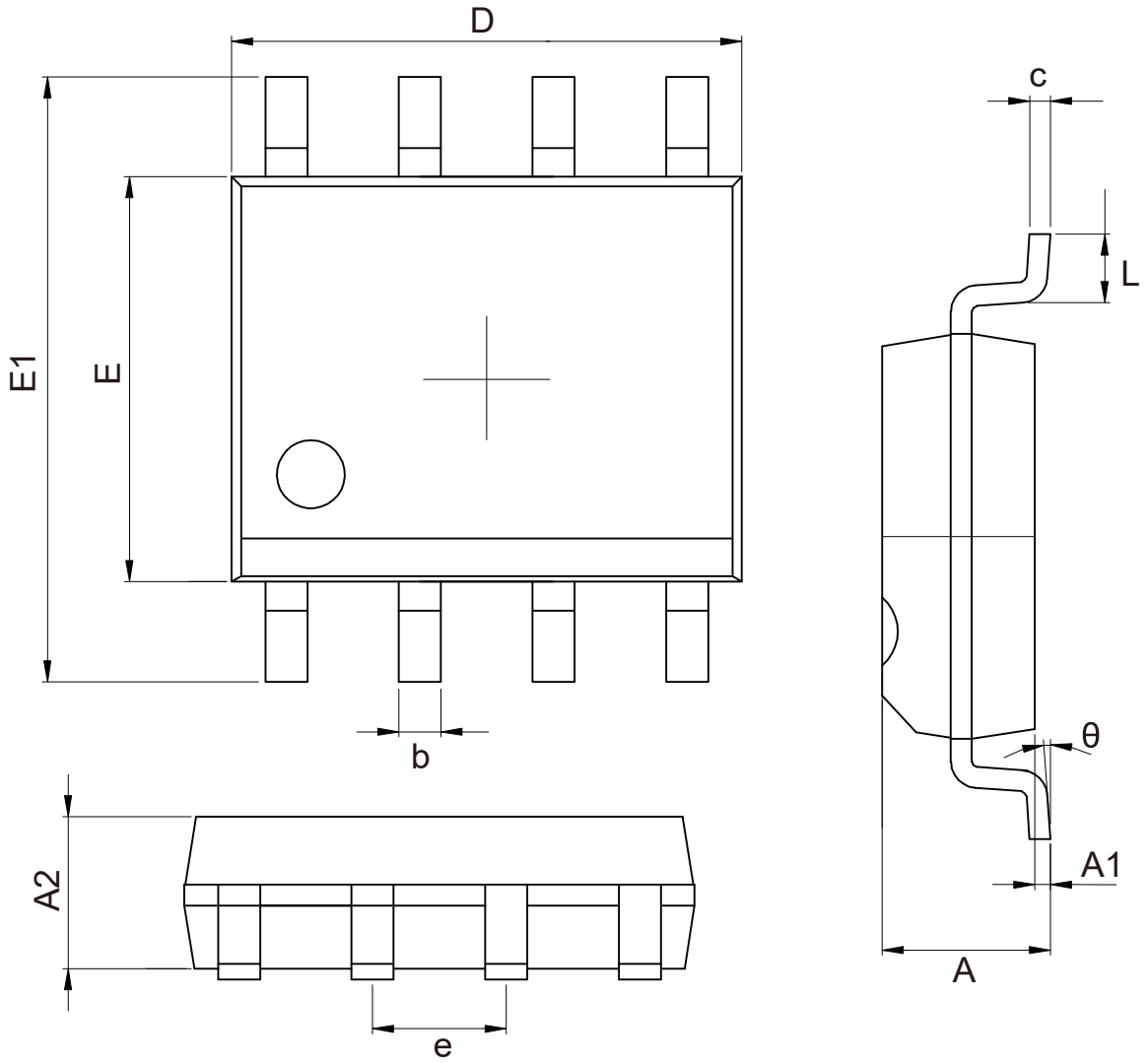

COMMON DIMENSIONS CUNITS MEASURE=MILLIMETER			
SYMBOL	MIN	NOM	MAX
A	1.350	——	1.750
A1	0.100	——	0.250
A2	1.350	——	1.550
b	0.330	——	0.510
c	0.170	——	0.250
D	4.700	——	5.100
E	3.800	3.900	4.000
E1	5.800	——	6.200
e	1.270BSC		
L	0.400	——	1.270
θ	0°	--	8°

Unit:mm

Tape & Reel Information

Dimensions in mm

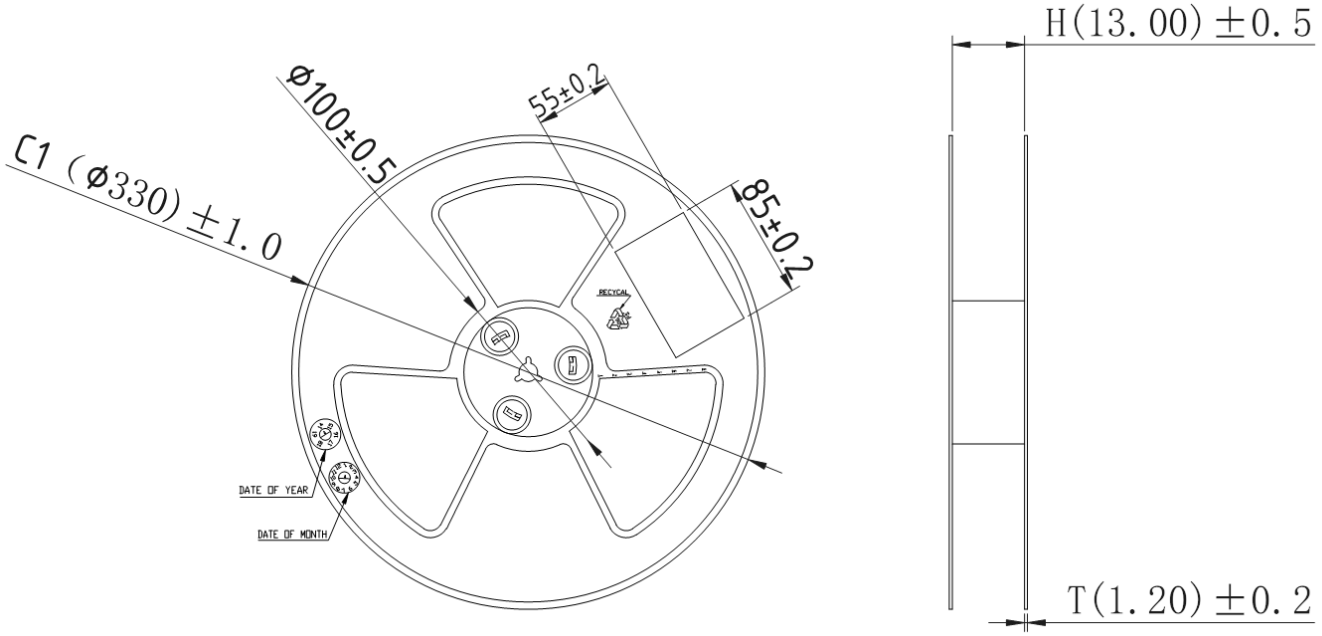

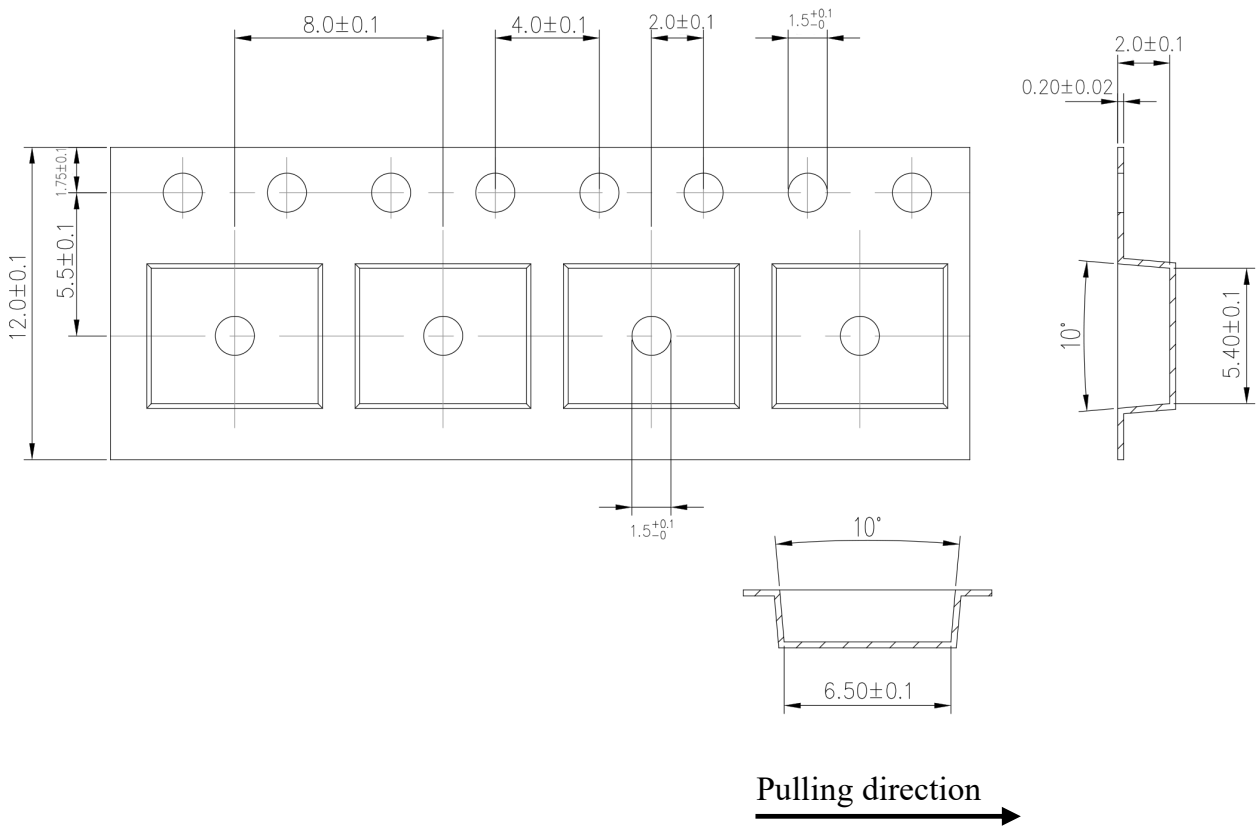

Marking Information：

①. Part NO.

②. Date Code(YWWG / R)

Y : Year Code , last digit of the year

WW : Week Code(01-53)

G/R : G(Green) /R(Lead Free)

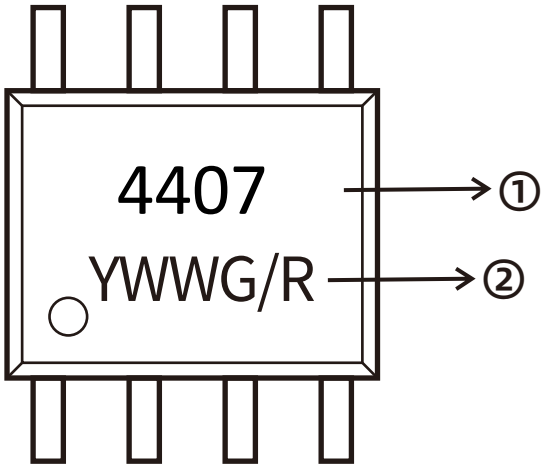

Previous Version

Version	Date	Subjects (major changes since last revision)
1.2	2024-03-21	Release of final version

Attention :

- Information furnished in this document is believed to be accurate and reliable. However, Shenzhen Doingter Semiconductor Co.,Ltd. assumes noresponsibility for the consequences of use without consideration for such information nor use beyond it.
- Information mentioned in this document is subject to change without notice, apart from that when an agreement is signed, Shenzhen Doingter complies with the agreement. Products and information provided in this document have no infringement of patents.
- Shenzhen Doingter assumes noresponsibility for any infringement of other rights of third parties which may result from the use of such products and information. This document supersedes and replaces all information previously supplied. Is a registered trademark of Shenzhen Doingter Semiconductor Co., Ltd. Copyright © 2013 Shenzhen DoingterSemiconductor Co.,Ltd. Printed All rights reserved.