VOLTAGE RANGE
40 Volts
CURRENT
3.0 Ampere

FEATURES

* Ideal for surface mount applications
* Easy pick and place
* Built-in strain relief
* Low forward voltage drop

MECHANICAL DATA

* Case: Molded plastic
* Epoxy: UL 94V-0 rate flame retardant
* Metallurgically bonded construction
* Polarity: Color band denotes cathode end
* Mounting position: Any
* Weight: 0.063 grams

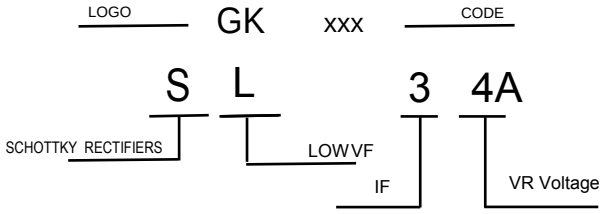

MAXIMUM RATINGS AND ELECTRICAL CHARACTERISTICS

Rating 25°C ambient temperature uniess otherwies specified.
Single phase half wave, 60Hz, resistive or inductive load.
For capacitive load, derate current by 20%.

TYPE NUMBER	SL34A	UNITS
Maximum Recurrent Peak Reverse Voltage	40	V
Maximum RMS Voltage	28	V
Maximum DC Blocking Voltage	40	V
Maximum Average Forward Rectified Current See Fig. 1	3.0	A
Peak Forward Surge Current, 8.3 ms single half sine-wave superimposed on rated load (JEDEC method)	80	A
Maximum Instantaneous Forward Voltage at 3.0A	0.46	V
Maximum DC Reverse Current Ta=25°C	0.2	mA
at Rated DC Blocking Voltage Ta=125°C	30	mA
Typical Junction Capacitance (Note1)	240	pF
Typical Thermal Resistance R JA (Note 2)	88	°C/W
Operating Temperature Range T_J	-55 to +125	°C
Storage Temperature Range T_{STG}	-55 to +150	°C

NOTES:

1. Measured at 1MHz and applied reverse voltage of 4.0V D.C.
2. P.C.B. mounted with 0.2" x 0.2" (5.0 mm x 5.0 mm) copper pad areas

RATING AND CHARACTERISTIC CURVES

FIG.1-TYPICAL FORWARD CURRENT DERATING CURVE

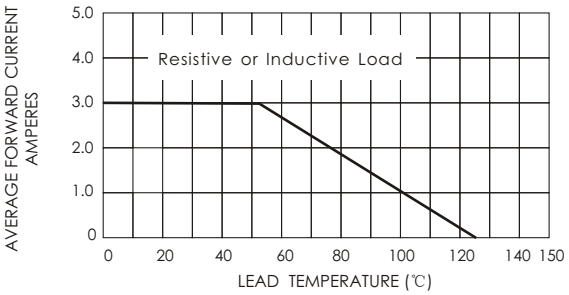

FIG.2-TYPICAL FORWARD CHARACTERISTICS

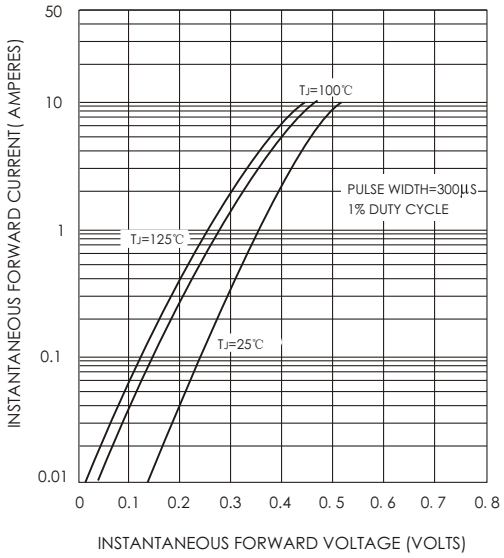

FIG.3 - TYPICAL REVERSE CHARACTERISTICS

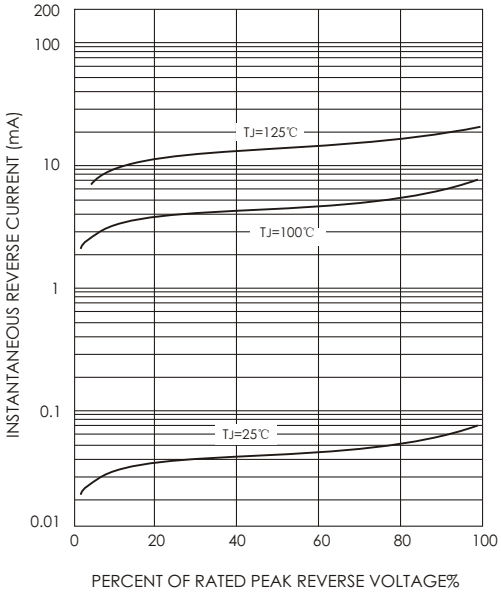

FIG.4-MAXIMUM NON-REPETITIVE FORWARD SURGE CURRENT

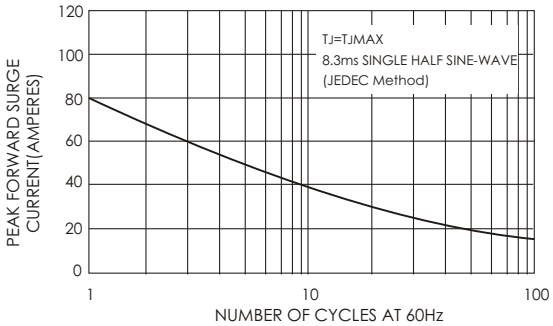

FIG.5-TYPICAL JUNCTION CAPACITANCE

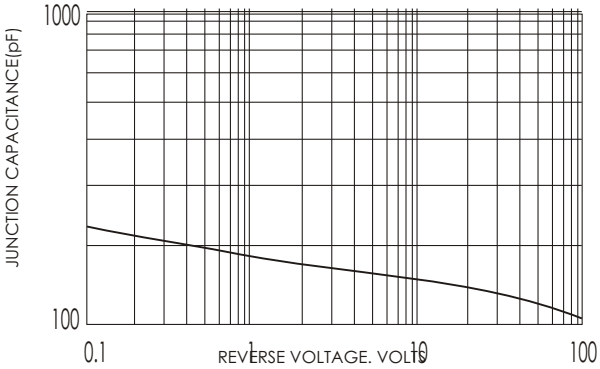

Soldering parameters

Reflow Condition		Pb-Free assembly (see as bellow)
Pre Heat	-Temperature Min ($T_{s(min)}$)	+150℃
	-Temperature Max($T_{s(max)}$)	+200℃
	-Time (Min to Max) (ts)	60-180 secs.
Average ramp up rate (Liquid us Temp (T_L) to peak)		3℃/sec. Max
$T_{s(max)}$ to T_L - Ramp-up Rate		3℃/sec. Max
Reflow	-Temperature(T_L)(Liquid us)	+217℃
	-Temperature(t_L)	60-150 secs.
Peak Temp (T_p)		+260(+0/-5)℃
Time within 5℃ of actual Peak Temp (t_p)		30 secs. Max
Ramp-down Rate		6℃/sec. Max
Time 25℃ to Peak Temp (T_P)		8 min. Max
Do not exceed		+260℃

FIG5: Reflow condition

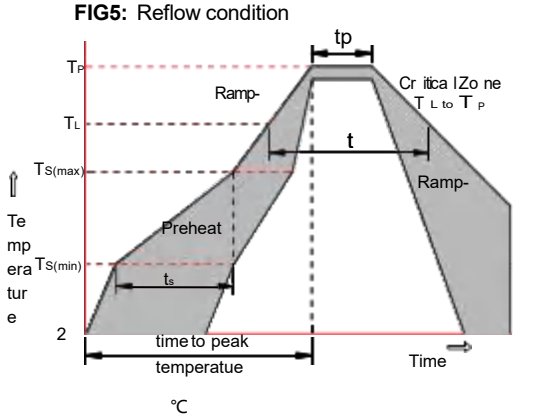

Package Dimensions & Suggested Pad Layout

SMA

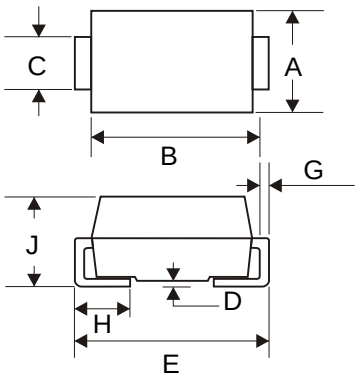

SMA		
Dim	**Min**	**Max**
A	2.40	2.79
B	3.99	4.50
C	1.32	1.47
D	-	0.20
E	4.93	5.28
G	0.15	0.31
H	0.76	1.52
J	1.98	2.29
All Dimensions in mm		

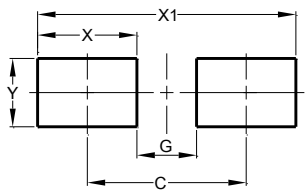

Dimensions	Value (in mm)
C	4.20
G	1.90
X	2.30
X1	6.50
Y	2.00

Tape & rell specification

Tape

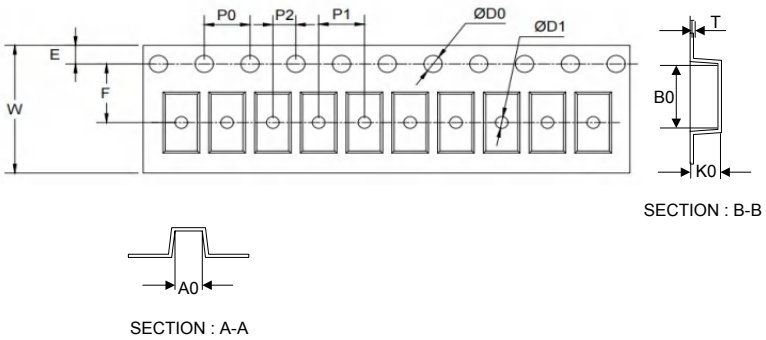

Symbol	Dimension (mm)
P0	4.00±0.20
P1	4.00±0.20
P2	2.00±0.20
D0	1.60±0.20
D1	1.60±0.20
E	1.75±0.20
F	5.50±0.15
W	12.00±0.25
A0	2.75±0.20
B0	5.25±0.20
K0	2.45±0.25
T	0.20±0.10

7” Reel

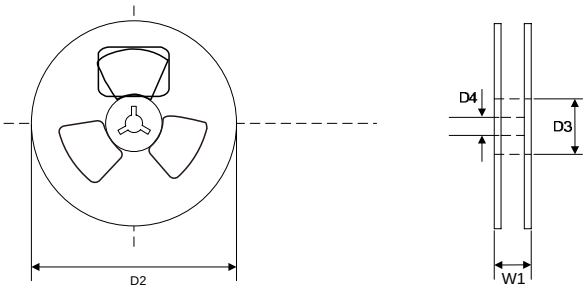

D2	176.0±5.0
D3	55.0Min.
D4	14.0±2.5
W1	14.0±2.5
Quantity: 2000PCS	

13” Reel

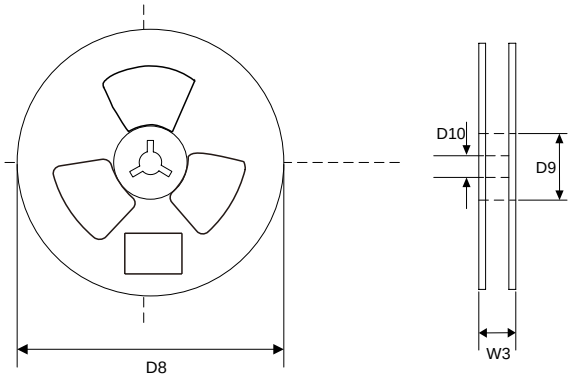

D8	330.0±5.0
D9	73.0Min.
D10	14.0±2.5
W3	14.0±2.5
Quantity: 5000PCS	