Description：

This N-Channel MOSFET uses advanced trench technology and design to provide excellent $R_{DS(on)}$ with low gate charge.

It can be used in a wide variety of applications.

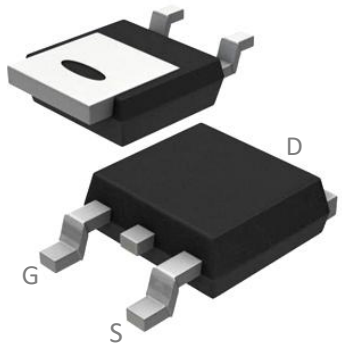

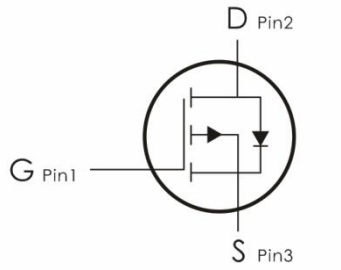

Features：

1) V_{DS}=60V,I_D=20A,$R_{DS(ON)}$<31mΩ @V_{GS}=10V（Typ：24mΩ）
2) Low gate charge.
3) Green device available.
4) Advanced high cell denity trench technology for ultra low $R_{DS(ON)}$.
5) Excellent package for good heat dissipation.
6) MSL3

Package Marking and Ordering Information：

Part NO.	Marking	Package	Packing
NTD20N06T4G-DO	20N06G	TO- 252	2500 pcs/Reel

Absolute Maximum Ratings： (T_C=25℃ unless otherwise noted)

Symbol	Parameter	Ratings	Units
V_{DS}	Drain-Source Voltage	60	V
V_{GS}	Gate-Source Voltage	±20	V
I_D	Continuous Drain Current[1]	20	A
	Continuous Drain Current-T_C=100℃[1]	14	
I_{DM}	Pulsed Drain Current[2]	80	
P_D	Power Dissipation	31	W
E_{AS}	Single pulse avalanche energy[3]	24	mJ
T_J, T_{STG}	Operating and Storage Junction Temperature Range	-55-+150	℃

Thermal Characteristics：

Symbol	Parameter	Max	Units
$R_{\theta JC}$	Thermal Resistance,Junction to Case	4	℃/W

Electrical Characteristics: (T_C=25℃ unless otherwise noted)

Symbol	Parameter	Conditions	Min	Typ	Max	Units
Off Characteristics						
BV_{DSS}	Drain-Sourtce Breakdown Voltage	V_{GS}=0V,I_D=250μA	60	---	---	V
I_{DSS}	Zero Gate Voltage Drain Current	V_{GS}=0V, V_{DS}=60V	---	---	1	μA
I_{GSS}	Gate-Source Leakage Current	V_{GS}=±20V, V_{DS}=0A	---	---	±100	nA
On Characteristics						
$V_{GS(th)}$	Gate-Source Threshold Voltage	V_{GS}=V_{DS}, I_D=250μA	1.2	1.67	2.5	V
$R_{DS(ON)}$	Drain-Source On Resistance[4]	V_{GS}=10V,I_D=10A	---	24	31	mΩ
		V_{GS}=4.5V,I_D=5A	---	30	39	mΩ
Dynamic Characteristics						
C_{iss}	Input Capacitance	V_{DS}=25V, V_{GS}=0V, f=1MHz	---	950	---	pF
C_{oss}	Output Capacitance		---	55	--	
C_{rss}	Reverse Transfer Capacitance		---	45.3	---	
Switching Characteristics						
$t_{d(on)}$	Turn-On Delay Time	V_{DS}=30V, I_D=15A, R_{ENG}=1.8Ω ,V_{GS}=10V	---	7.6	---	ns
t_r	Rise Time		---	20	---	ns
$t_{d(off)}$	Turn-Off Delay Time		---	15	---	ns
t_f	Fall Time		---	24	---	ns
Q_g	Total Gate Charge	V_{GS}=10V, V_{DS}=30V, I_D=10A	---	20	---	nC
Q_{gs}	Gate-Source Charge		---	3.7	---	nC
Q_{gd}	Gate-Drain "Miller" Charge		---	5.3	---	nC
Drain-Source Diode Characteristics						
V_{SD}	Diode Forward Voltage	V_{GS}=0V, I_{SD}=20A	---	---	1.2	V
I_S	Continuous Drain Curren	V_D=V_G=0V	---	---	20	A
I_{SM}	Pulsed Drain Current		---	---	80	A
Trr	Reverse Recovery Time	I_F=10A,T_J=25℃ dI/dt=100A/us	---	29	---	ns
Qrr	Reverse Recovery Charge		---	43	---	nC

Notes:

1. Computed continuous current assumes the condition of $T_{j,Max}$ while the actual continuous current depends on the thermal & electro-mechanical application board design
2. Repetitive Rating: Pulse Width Limited by Maximum Junction Temperature
3. EAS condition : TJ=25℃,VDD=30V,V_G=10V,L=0.5mH
4. Pulse Test: Pulse Width≤300μs, Duty Cycle≤0.5%

Typical Characteristics: (T_C=25℃ unless otherwise noted)

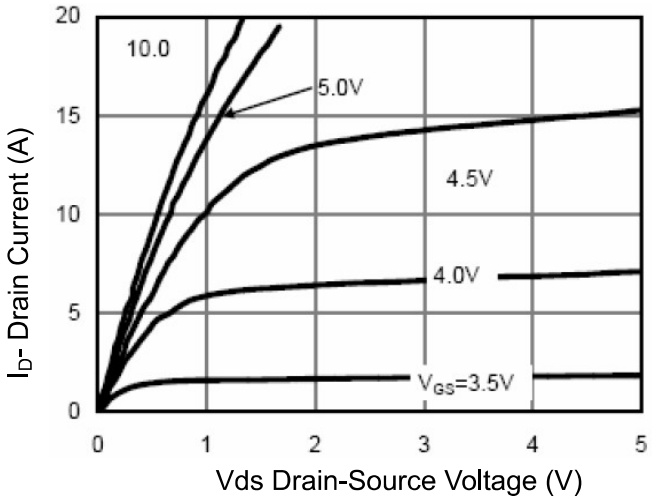

Figure 1 Output Characteristics

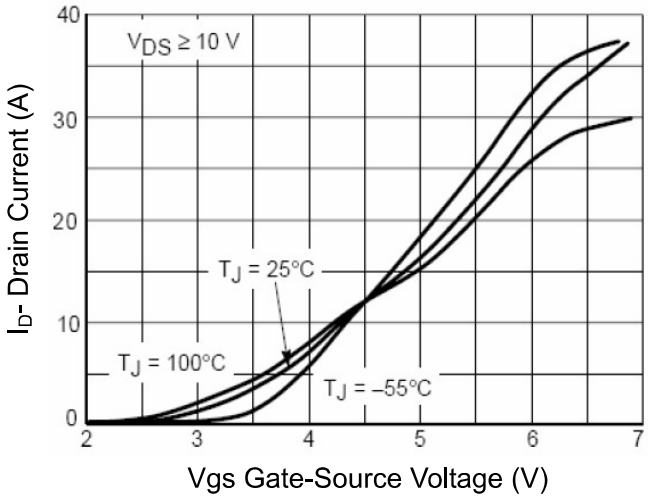

Figure 2 Transfer Characteristics

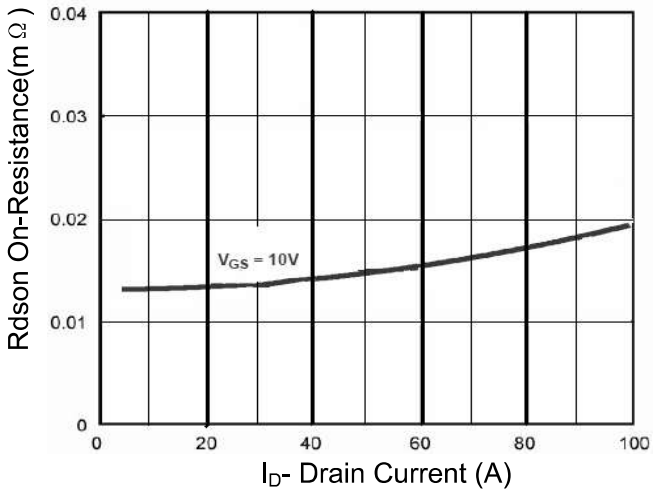

Figure 3 Rdson- Drain Current

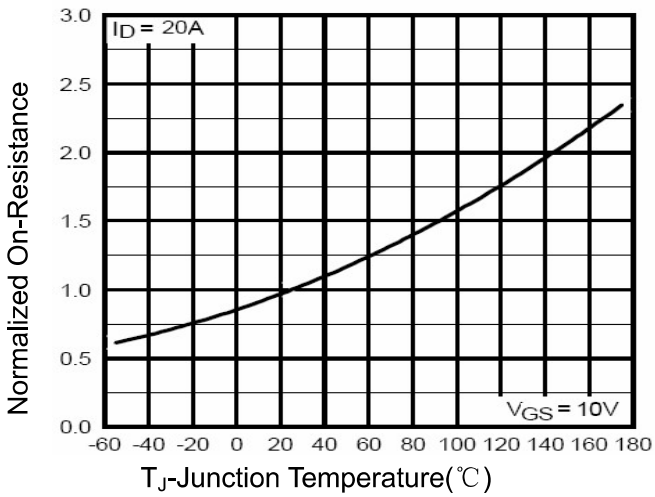

Figure 4 Rdson-Junction Temperature

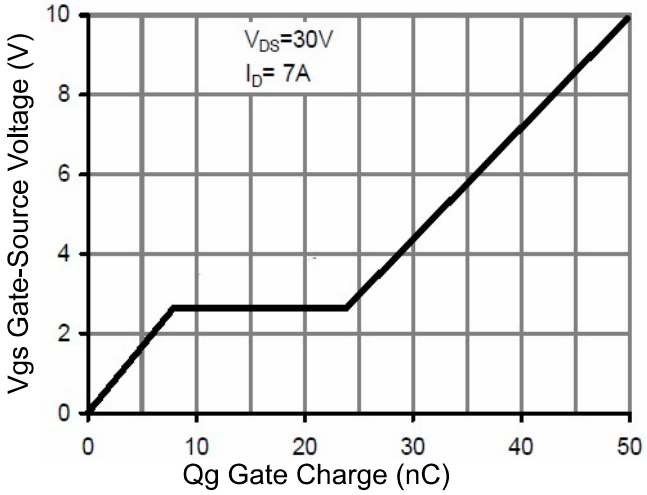

Fiure 5 Gate Chare

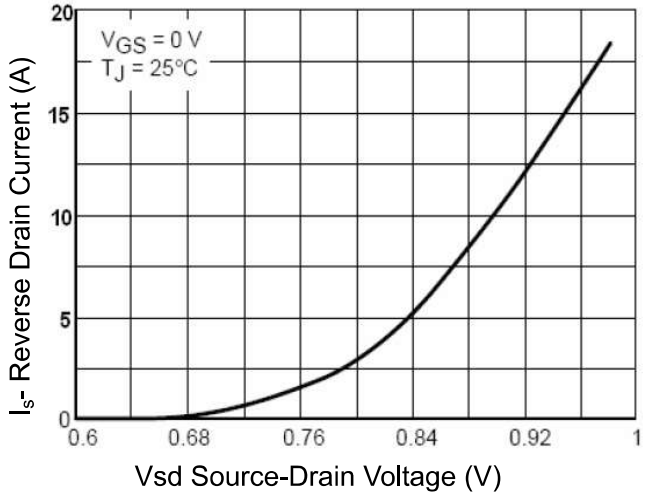

Figure 6 Source- Drain Diode Forward

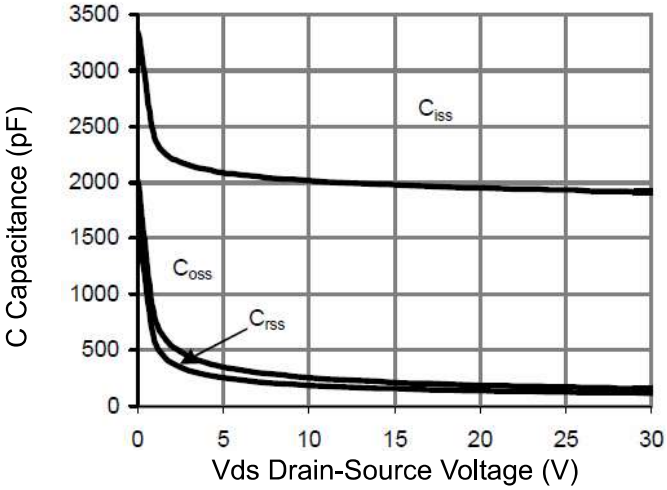

Figure 7 Capacitance vs Vds

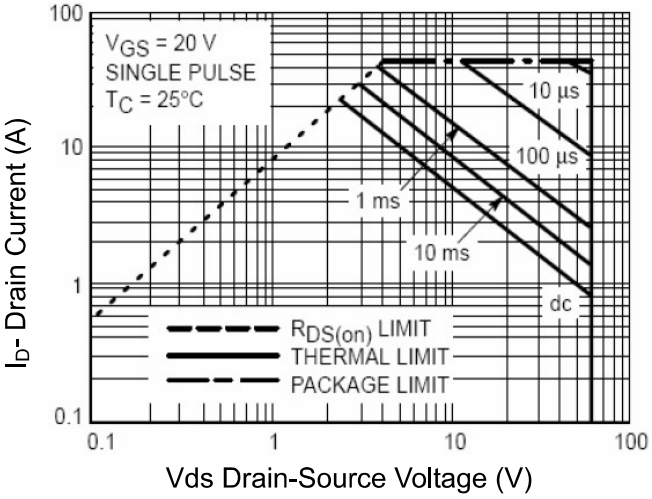

Figure 8 Safe Operation Area

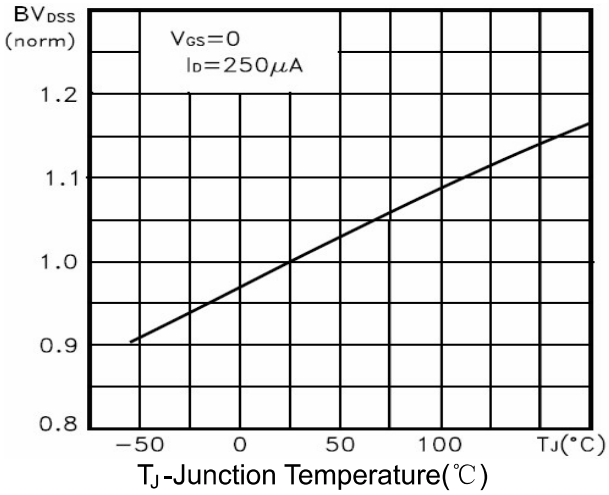

Fi ure 9 BV vs Junction Temerature

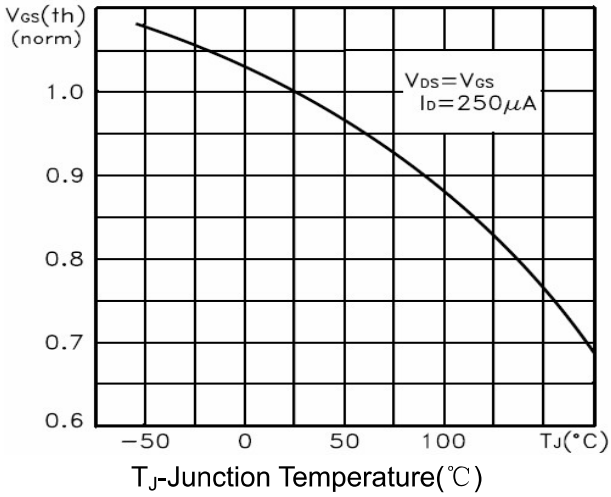

Figure 10 $V_{GS(th)}$ vs Junction Temperature

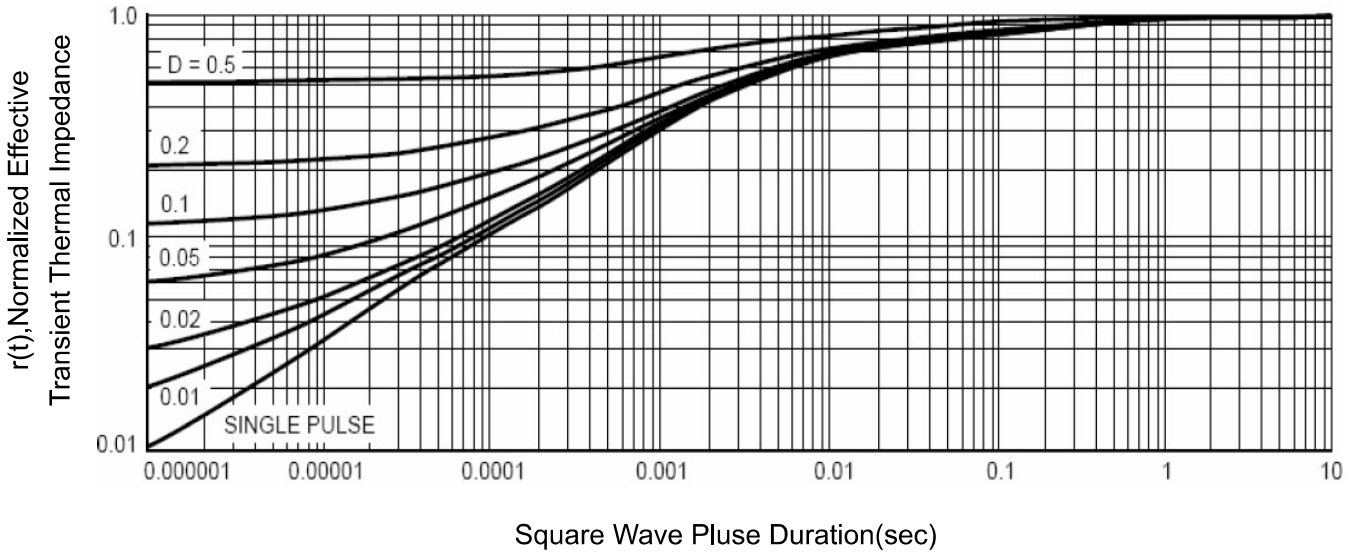

Figure 11 Normalized Maximum Transient Thermal Impedance

TO-252 Package Information

Package Outline Type-A

UNIT: mm

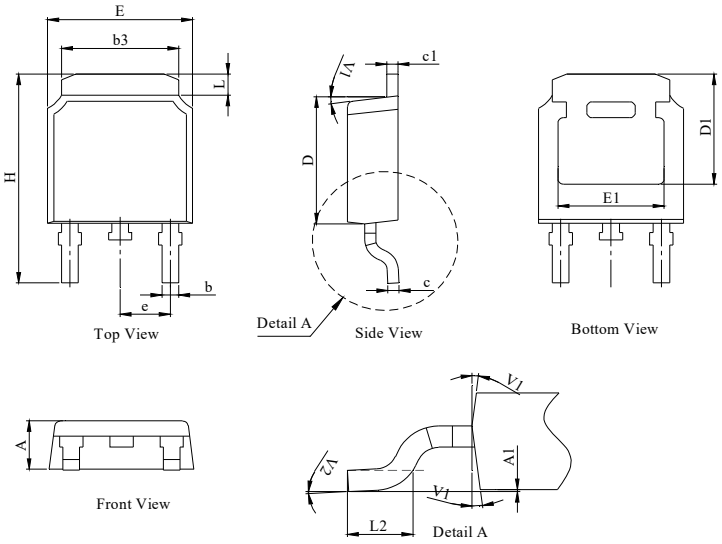

DIM.	MILLIMETER		
	MIN.	NOM.	MAX.
A	2.18	2.30	2.39
A1	0	--	0.13
b	0.64	0.76	0.89
c	0.40	0.50	0.61
c1	0.46	0.50	0.58
D	5.97	6.10	6.23
D1	5.05	--	--
E	6.35	6.60	6.73
E1	4.32	--	--
b3	5.21	5.38	5.55
e	2.29 BSC		
H	9.40	10.00	10.40
L	0.89	--	1.27
L2	1.40	--	1.78
V1	7° REF		
V2	0°	--	6°

Package Outline Type-B

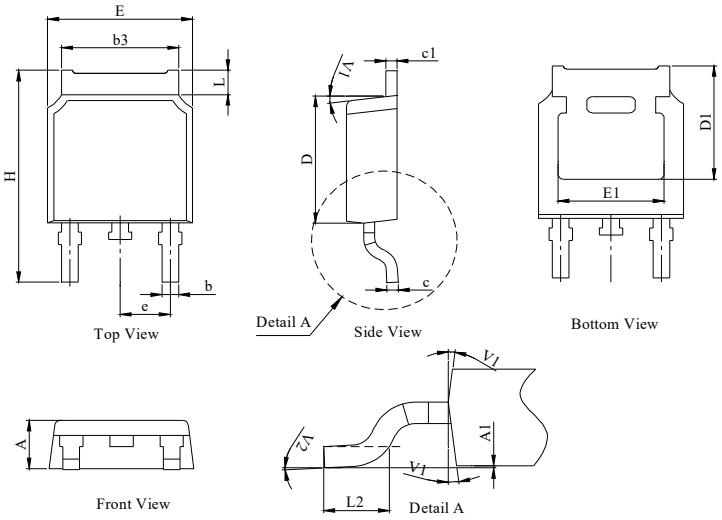

DIM.	MILLIMETER		
	MIN.	NOM.	MAX.
A	2.10	2.30	2.40
A1	0	--	0.13
b	0.66	0.76	0.86
b3	5.21	5.38	5.55
c	0.40	0.50	0.60
c1	0.44	0.50	0.58
D	5.90	6.10	6.30
D1	5.30REF		
E	6.40	6.60	6.80
E1	4.63	-	-
e	2.29 BSC		
H	9.50	10.00	10.70
L	1.09	--	1.21
L2	1.35	--	1.65
V1	7° REF		
V2	0°	--	6°

Recommended Soldering Footprint

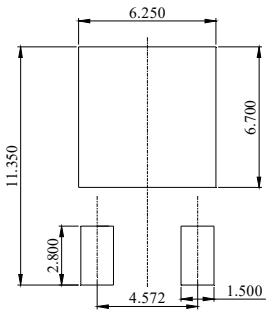

Tape & Reel Information

Dimensions in mm

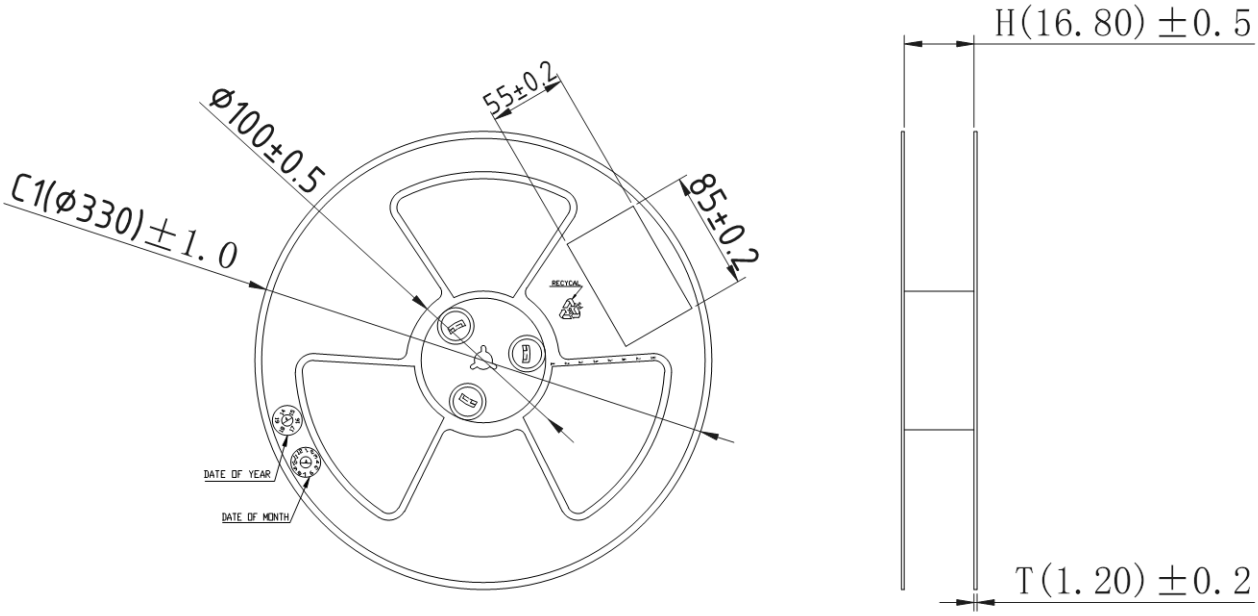

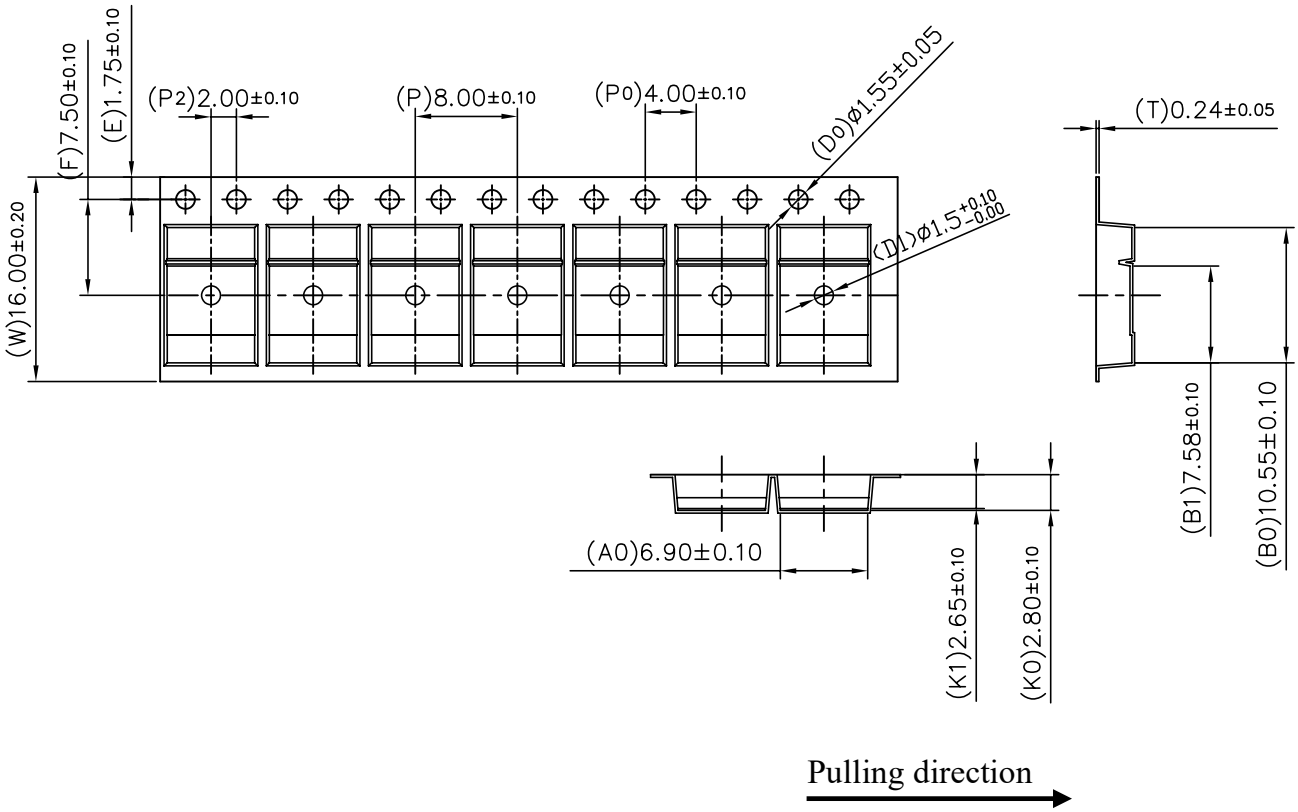

Marking Information：

①. Doingter LOGO

②. Date Code(YWWG / R)

Y : Year Code , last digit of the year

WW : Week Code(01-53)

G/R : G(Green) /R(Lead Free)

③. Part NO.

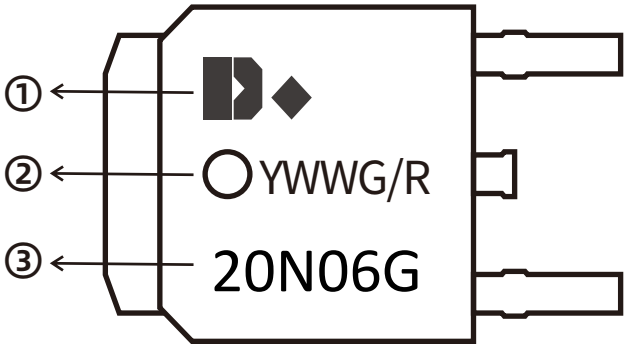

Previous Version

Version	Date	Subjects (major changes since last revision)
2.0	2025-07-02	Release of final version

Attention :

- Information furnished in this document is believed to be accurate and reliable. However, Shenzhen Doingter Semiconductor Co.,Ltd. assumes noresponsibility for the consequences of use without consideration for such information nor use beyond it.
- Information mentioned in this document is subject to change without notice, apart from that when an agreement is signed, Shenzhen Doingter complies with the agreement. Products and information provided in this document have no infringement of patents.
- Shenzhen Doingter assumes noresponsibility for any infringement of other rights of third parties which may result from the use of such products and information. This document supersedes and replaces all information previously supplied. Is a registered trademark of Shenzhen Doingter Semiconductor Co., Ltd. Copyright © 2013 Shenzhen DoingterSemiconductor Co.,Ltd. Printed All rights reserved.