产品承认书
SPECIFICATION FOR APPROVAL

客户名称:
CUSTOMER

我司料号:
OUR PART NO. **XRTLVRX260X1SR12NMHDBC**

我司品名:
OUR PART NAME **Mini Molding Power Inductors**

送样日期:
DATE SAMPLES

数 量:
QUANTITY

制造确认 MANUFACTURER APPROVE		
拟制 DRAWN	审核 CHECKED	确认 APPROVED
HuFangting	RaoPin	Zhongcuilan

客户确认 CUSTOMER APPROVE

客户名称 CUSTOMER NAME:

客户料号 CUSTOMER P/N:

规格型号 DESCRIPTION: Dimensions:X206X1 Inductance: 0.12 uH

检查結果: □ 合格 □不合格 签名及盖章:

INSPECT RESULT ACCEPT REJECT SIGNATURE AND STAMP

说明 REMARK:

如对本承认书内容有异议请提出或标记发送至我司，本承认书在未收到异议回复时于本承认书提供一周后生效。

If you have any objection to the contents of this acknowledgement, please put forward or mark it and send it to our company. This acknowledgement will take effect one week after it is provided if you do not receive an objection reply.

东莞市祥如电子有限公司

Dongguan xiangru electronics co., ltd

Tel：0769-86346548 Fax：0769-86346358

Email：dgxiangru@126.com

产品承认书
SPECIFICATION FOR APPROVAL

客户名称 CUSTOMER		日期 DATE	2026/3/16
客户物料编号 CUSTOMER P/N		客户规格型号 DESCRIPTION	Dimensions:X206X1 Inductance: 0.12 uH
我司物料编号 OUR PART NO	XRTLVRX260X1SR12NMHDBC	我司品名 OUR PART NAME	Mini Molding Power Inductors

修订记录 Revision record

日期 Date	修改内容 Modify the content	审核 Checked	确认 Approved
2026/3/16	首次发行First issue	Zhongcuilan	Huangchuangen
2026/10/7	添加产品结构图	Zhongcuilan	Huangchuangen

Mini Molding Power Inductors

1. Featurs
1.1 Metal material for large current and low loss.
1.2 High performance (Isat) realized by metal dust core.
1.3 Low loss realized with low Rdc.
1.4 Closed magnetic circuit design reduces leakage flux.
1.5 Vinyl thermal spray, better surface compactness.
1.6 Environmental requirements must comply with the QESP-44 document
1.7 100% lead (Pb) free meet RoHS2.0 and Halogen， Reach and other legal and regulatory requirements standard.

2. Application
2.1 DC/DC converters.
2.2 Pad,Smart phone.
2.3 Portable gaming devices, Smart wear, Wi-Fi module.
2.4 Notebooks, VR, AR.
2.5 LCD displays, HDDs, DVCs, DSCs, etc.
2.6 Baseband power supply, Amplifier, Power management, Module power supply, Camera power manageme

3. Ordering Procedure

XRTLVR	X260	X1	S	R12N	M	H	D	B	-
			S						
①	②	③	④	⑤	⑥	⑦	⑧	⑨	⑩

①Series Name: Molding Power Inductors

②External Dimensions(L×W):X260=12.0*6.0 mm

③External Dimensions(H):X1=11.0 mm

④Size Tolerance:S=±0.2mm

⑤Inductance value:R12N=0.12uH

⑥Tolerance: M=±20%

⑦Coating color: H=

⑧Product type:D=

⑨Special define: B~Z=Special

⑩special requirements:-S=Single

For special characteristics, please refer to the specific values in Item 5 "Specifications".

4. Product Category

① .SHAPE AND DIMENSIONS

VR： **Outline Dimensions** **Recommend Land Pattern Dimensions**

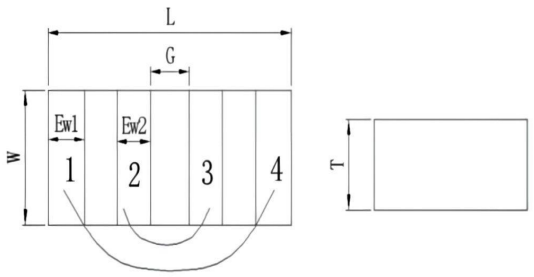

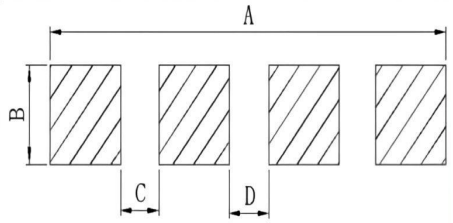

Units:mm

Series	L	G	W	Ew1	Ew2	T	A	B	C	D
XRTLVRX260X1S	11.8±0.2	1.55±0.2	6.0 Max	1.8±0.2	1.24±0.2	11.0 Max	12.2	6.2	1.9	1.35

5. Marking

②. Marking(Black)

Note 1.: The inductor is marked with a 3-digit code Example – – 1.0μH → 1R0
Note 2.: The point on the top surface represents winding direction of choke

③.Product characteristic description

Note 1.: All test data is referenced to 25 ℃ ambient.
Note 2.: Test Condition:1MHz, 1.0Vrms.
Note 3.: Irms:DC current (A) that will cause an approximate △T of 40 ℃.
Note 4.: Isat:DC current (A) that will cause L0 to drop approximately 30%.
Note 5.: Operating Temperature Range -55℃ to + 125℃.
Note 6.: The part temperature (ambient + temp rise) should not exceed 125 under ℃ the worst case operating conditions. Circuit design, component placement, PCB trace size and thickness, airflow and other cooling provision all affect the part temperature. Part temperature should be verified in the end application.
Note 7.: The rated current as listed is either the saturation current or the heating current depending on which value is lower

6.Specifications 单绕组-Ono Coil

P/N	L1~4 / L2~3 (μH)@(0A) 1MHz	Rdc1~4(mΩ)		Rdc2~3(mΩ)		Heat rating current Irms(A)		Saturation current Isat(A)	
		Typical	Max	Typical	Max	Typical	Max	Typical	Max
XRTLVRX260X1SR12NMHDBC	0.12	0.120	0.135	0.35	0.4	45	40	120	110

7.Structure

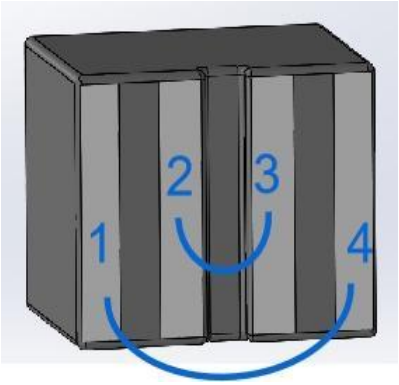

9. Product test

9.1 Reliability

No.	Item	Requirements	Test Methods and Remarks	Reference	Sample Size
1	Solderability	(1) No case deformation or change in appearance. (2) Terminal area must have 95% min. Solder coverage.	①Temperature:245± 5℃. ②Solder Composition: Sn/Ag3.0/Cu0.5(Pb Free). ③Sample immersion tin furnace 5 ±0.5s.	AEC-Q200 (J-STD 002)	32
2	Adhesion of teral electrode	(1)Strong bond between the pad and the core, without come off PCB.	①Preconditioning：245℃Reflow 3 times ②Inductors shall be subjected to (260+0/-5℃.)℃ for (10±5)s Soldering in the base whit 0.3mm solder. ③Aplombelectrode way plus tax X N for (10±1) seconds. 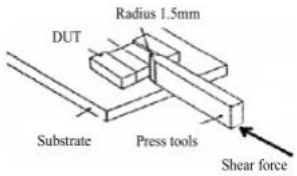	AEC-Q200 (AEC-Q200-006)	32
3	Reflow test	(1) No physical damage. (2) | ΔL0/L0 | ≤10%	① The peak temperature: 260+0/-5℃. ② Reflow:3times. ③ Temperature curve is as below 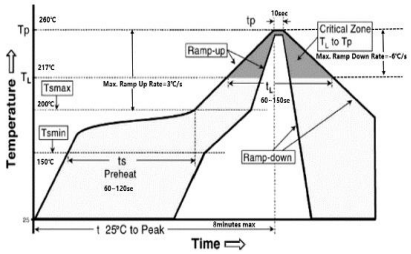	AEC-Q200 (MIL-STD-202 Method 210)	32
4	High temperature	(1) No physical damage. (2) | ΔL0/L0 | ≤10%	① Preconditioning: Bake at 125+5℃ for 24±0.5H，245℃Reflow 3 times ②Temperature: 125±2℃. ③ Time : 1000 hours. ④Measurement at 24±4 hours after test conclusion 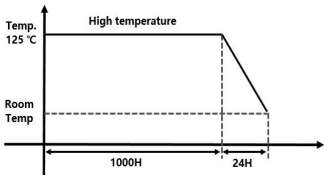	AEC-Q200 (MIL-STD -202 Method 108)	77
5	Low temperature	(1) No physical damage. (2) | ΔL0/L0 | ≤10%	①Preconditioning: Bake at 125+5℃ for 24±0.5H，245℃Reflow 3 times ②Temperature: -55±2℃. ③Time : 1000 hours. ④ Measurement at 24±4 hours after test conclusion 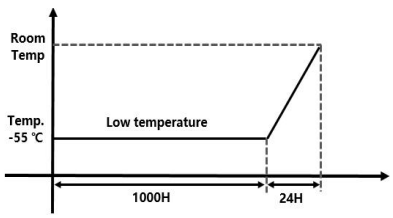	JESD22-A119A	77

6	Thermal shock	(1) No physical damage. (2) | ΔL0/L0 | ≤10%	①Preconditioning: Bake at 125+5℃ for 24±0.5H，245℃Reflow 3 times ②Repeat 500 cycle as follow :(-55±2 ℃ ,30±3minutes) 、(Room temperature, 5 minutes)、(+125±2 ℃ ,30±3minutes)、(Room temperature, 5 minutes) ③Measurement at 24±4 hours after test conclusion	MIL-STD -202 Method 107	77
7	Resistance to SolderingHeat	(1) No physical damage. (2) | ΔL0/L0 | ≤10%	①Solder Composition: Sn/Ag3.0/Cu0.5(Pb-Free). ②Solder Temperature: 260±5℃. ③Immersion Time: 10±1sec.	AEC-Q200 （MIL-STD-202 Method 210）	32
8	Static Humidity	(1) No physical damage. (2) | ΔL0/L0 | ≤10%	①Preconditioning: Bake at 125+5℃ for 24±0.5H，245℃Reflow 3 times ②1000 hours, 85°C/85%RH. ③ Unpowered. ④Measurement at 24±4 hours after test conclusion 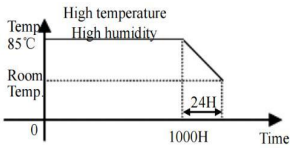	AEC-Q200 (MIL-STD-202 Method 103)	77
9	Board Flex	(1) No physical damage. (2) | ΔL0/L0 | ≤10%	①Preconditioning：245℃Reflow 3 times ②Part mounted on a 100mm*40mm FR4 PCB board, which is 1.6±0.2 mm thick and as a Layer-thickness 35 µm ± 10 µm. ③ Bending speed is 1mm/s. ④ Keeping the P.C Board 2 mm minimum for 60 seconds. 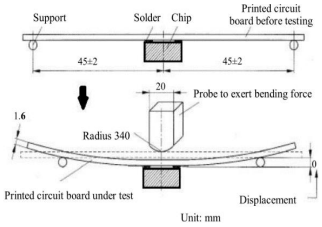	AEC-Q200 (AEC-Q200-005)	30
10	Vibration	(1) No physical damage. (2) | ΔL0/L0 | ≤10%	①Preconditioning：245℃Reflow 3 times ②Frequency range : 10~2000Hz. ③Amplitude: 1.5mm or 20g. ④ Sweep time and duration: 10~2000~10Hz for 20 minutes. ⑤ Each four hours in X,Y,Z direction, 12hours in total.	AEC-Q200 (MIL-STD-202 Method 204)	32
11	Mechanical Shock	(1) No physical damage. (2) | ΔL0/L0 | ≤10%	① Preconditioning：245℃Reflow 3 times ②Peak acceleration:100G/S ③Duration of pulse:6ms ④3times in each of 6(±X, ±Y, ±Z) axes.	AEC-Q200 (MIL-STD-202 Method 213)	32
12	Loading at High Temperature	(1) No physical damage. (2) | ΔL0/L0 | ≤10%	①Preconditioning: Bake at 125+5℃ for 24±0.5H，245℃Reflow 3 times ②Temperature: 85±2℃. ③ Time : 1000 hours. ④ Applied Current : Rated current. ⑤Measurement at 24±4 hours after test conclusion	AEC-Q200 (MIL-STD-202 Method 108)	77

9.2 Soldering Condition

(This is for recommendation, please customer perform adjustment according to actual application)
Recommend Reflow Soldering Profile：(solder : Sn96.5 / Ag3 / Cu0.5)

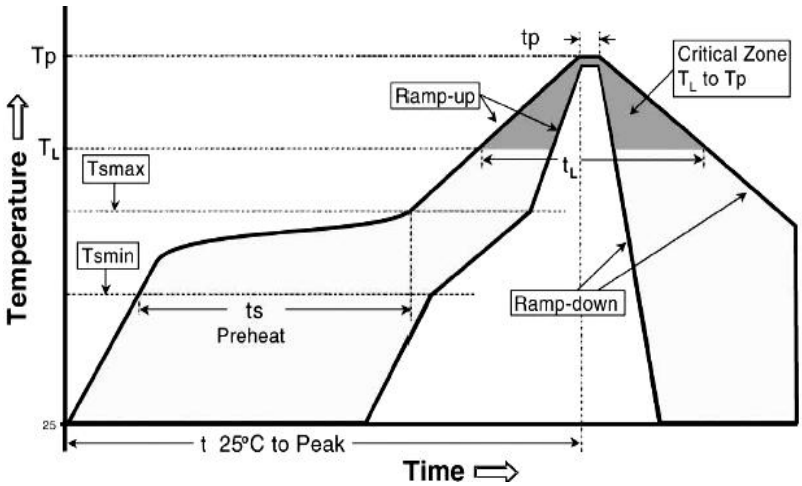

Profile Feature	Lead (Pb)-Free solder
Preheat： **Temperature Min (Ts_{min})** **Temperature Max (Ts_{max})** **Time (Ts_{min} to Ts_{max}) (ts)**	**150℃** **200℃** **60 -120 seconds**
Average ramp-up rate： **(Ts max to Tp)**	**3℃ / second max.**
Time maintained above : **Temperature (TL)** **Time (tL)**	**217℃** **60-150 seconds**
Peak Temperature (Tp)	**260℃**
Time within +10 /−5℃ of actual peak Temperature (tp)[2]	**10 seconds**
Ramp-down Rate	**6℃/second max.**
Time 25℃ to Peak Temperature	**8minutes max**

Allowed Re-flow times : 2 times
Remark : To avoid discoloration phenomena of chip on terminal electrodes, please use N2 Re-flow furnace .

10. Packing

10.1 Dimension of plastic taping: (Unit: mm)

The following dimensions are related to the actual fit of the machine，for reference only

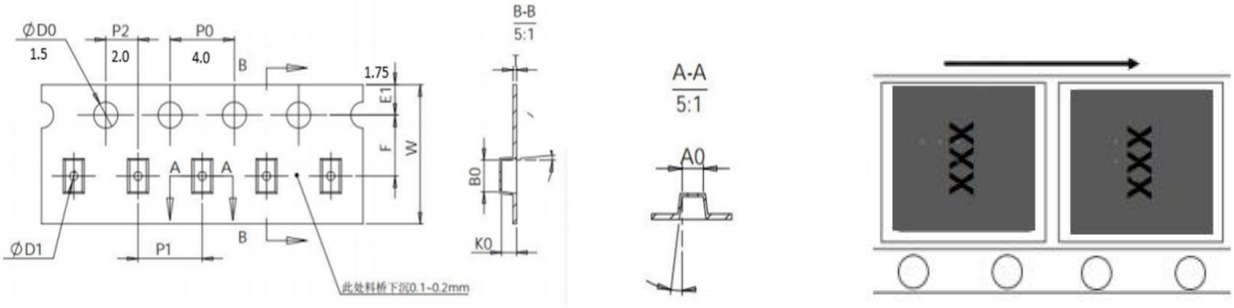

Series/mm	W	A0	B0	D1	F	K0	P1	T
公差	/	/	/	±0.20	±0.10	/	±0.10	±0.05
X260X1	24.0±0.30	6.20±0.10	12.2±0.10	1.5	11.5	11.2±0.10	16.0	0.5

10.2 Dimension of Reel：(Unit: mm)

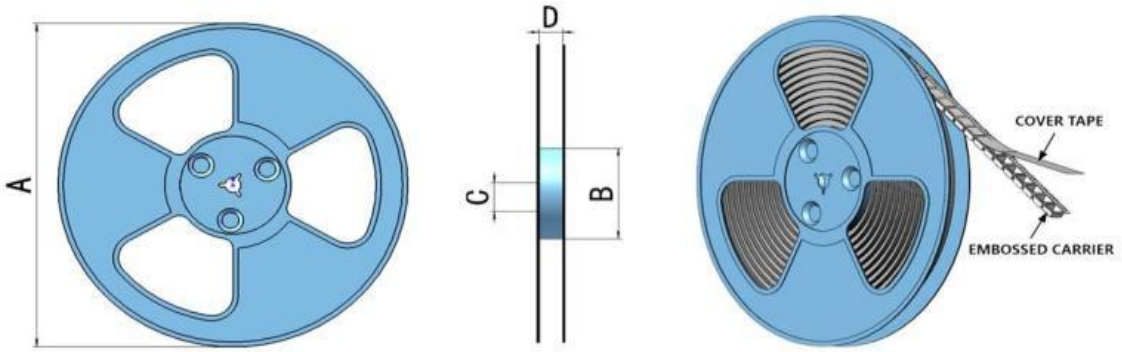

Series/mm	A	B	C	D	QTY/Reel
公差	±2.0	±1.0	±1.0	±1.0	/
X260X1	330	100	13.5	25.5	300pcs

11. Note

11.1 recommend products store in warehouse with temperature between 15 to 35℃ under humidity between 25 to 75%RH.Even under storage conditions recommended above, solder ability of products will be degraded stored over 1 year old.

11.2 Cartons must be placed in correct direction which indicated on carton, otherwise the reel or wire will be deformed.

11.3 Storage conditions as below are inappropriate:

a. Stored in high electrostatic environment

b. Stored in direct sunshine, rain, snow or condensation.

c. Exposed to sea wind or corrosive gases, such as Cl2, H2S, NH3, SO2, NO2, etc.

11.4 The products are used in circuit board thickness greater than 1.6mm. If customers use less than the thickness of the circuit board that you should confirm with the company, in order to recommend a more suitable product.