KHON® 温州康宏电子有限公司
WENZHOU KHAN ELECTRONIC CO.,LTD.

# 产品承认书

## SPECIFICATION FOR APPROVAL

| | |
|---|---|
| 客户名称 Customer: | 客户代码 Customer Code: |
| 客户料号 Customer NO.: | 本公司料号 Model NO.: TSW06111-066B331BA |
| 规格名称 Description: 6*6*6.6防水轻触开关 | 日　期 Date: 2026.09.29 |

| 新品承认 ☐ New Product Approve | | 规格变更承认 ☐ Description Change Approve | | 材料变更承认 ☐ Material Change Approve | |
|---|---|---|---|---|---|
| 设　计 Designed | 余嘉城 2026.09.29 | 审　核 Checked | 朱树清 2026.09.29 | 批　准 Approved | 徐君辉 2026.09.29 |

客户确认栏
Customer approval

| 采　购 Purchase Dept. | 品　质 QC Dept. | 工　程 Engineering Dept. | 批　准 Approved |
|---|---|---|---|
| | | | |

| 结　论 Conclusion | ☐ 合　格 Qualified | ☐ 重新送样 Sample Test Again | ☐ 不合格 Unqualified |
|---|---|---|---|

地址：浙江省乐清市宋湖工业区汇丰路 92 号　邮编：325600
Add: NO.92 Huifeng Road,Songhu Ind.Zone,Yueqing
325600,Zhejiang,China
Tel: 0577-62533000　61522500　62532000
Fax: 0577-62078255　62530255

ISO9001　ISO14001　ISO45001

1、 概述

General

1.1 适用范围

Application

此承认书适用与机械式轻触开关的相关要求

This specification is applied to the requirements for Tact Switch（Mechanical Contact）

1.2 工作温度范围

Operating Temperature Range

-40℃～85℃（在标准大气压、标准湿度条件下）

-40℃～85℃（Normal humidity,normal air pressure）

1.3 贮存环境

Storage environment

开关应贮存在温度为-5～30℃、相对湿度不大于 65%, 周围空气中无酸、碱、硫或其它腐蚀性气体的库房中。

The switch should be stored in warehouse which temperature of -5～30℃, relative humidity of not more than 65%, no acid, alkali，sulfur and other corrosive gases in the ambient air

1.4 测试条件

Test Conditions

在没有其他特定的条件下，应该在以下的条件进行测试和测量：

Unless otherwise specified，tests and measurements shall be made in the following standard conditions：

常温……5℃～35℃

Normal Temperature……5℃～35℃

相对湿度……65%±5%

Normal Humidity ……65%±5%

标准大气压……86KPa～106KPa

Normal air pressure ……86KPa～106KPa

在制造过程中，测试和测量应该在以下的条件下进行：

If any doubt arise from the judgment,test shall be conducted at the following conditions：

温度……20℃±2℃

Temperature ……20℃±2℃

相对湿度……65%±5%

Relative humidity ……65%±5%

环境气压……86KPa～106KPa

Air pressure ……86KPa～106KPa

2、 详细说明

Detailed specification

2.1 外观：应无影响、降低产品性能的缺陷；

Appearance: There should be no defects that affect the serviceability of product.

2.2 结构尺寸和安装尺寸：应符合装配图要求；

Structure and dimension: shall conform to the assemble drawings.

2.3 操作形式：有触觉反应的操作

Type of actuating: Tactile feedback.

2.4 开关结构：单回路单输出（具体的触点结构在装配图中已绘出）

Contact arrangement: 1 pole, 1 throw

(Details of contact arrangement are given in the assembly drawings)

2.5 开关工作额定值：DC 12V，50mA（有效值）

Ratings: 12V DC, 50mA (effective value)

3、 电气性能：

Electrical Specification

| 项 目<br>Item | | 试验条件<br>Test Conditions | 要求<br>Requirements |
|---|---|---|---|
| 3.1 | 接触电阻<br>Contact Resistance | 在以 5V 10mA 的直流电源或不低于 1KHz 的交流电源的电路中，以一个等于 2 倍按力的静负荷施加于手柄中心<br>Applying a static load of 2 times operating force to the center of the stem, measurement shall be made by 5V DC 10mA or more than 1KHz AC small-current contact resistance meter. | ≤100mΩ |
| 3.2 | 绝缘电阻<br>Insulation Resistance | 在端子之间施加 DC 100V/1min. 的条件下，测量端子之间底座、盖板的电阻值<br>Measurement shall be made following application of 100V DC potential, across terminals, and across terminals and cover, for one minute. | ≥100MΩ |
| 3.3 | 介质耐压<br>Dielectric voltage proof | 在端子之间施加 250V AC（50Hz 或 60Hz）/1min<br>250V AC (50Hz or 60Hz) shall be applied across terminals, for one minute. | 无击穿、无飞弧<br>There should be no breakdown and flashover |

| 项 目<br>Item | | 试验条件<br>Test Conditions | 要求<br>Requirements |
|---|---|---|---|
| 4.机械性能：<br>Mechanical Specification | | | |
| 4.1 | 按力<br>Operating Force | 开关垂直于操作方向放置，在开关驱动件顶端中心逐渐施力，测量开关导通所需的最大力度。<br>Placing the switch such that the direction of switch operation is vertical and then gradually the load applied to the center of the stem, the maximum load required of the switch to come to a stop shall be measured. | 230gf±50gf<br>详见附页 1<br>开关（荷重-行程）曲线<br>See Appendix 1<br>Switch (load - travel) test chart |
| 4.2 | 最大行程<br>Full Travel | 开关垂直于操作方向放置，以一个等于 2 倍按力的静负荷施加在开关驱动件顶端中心，测量顶端移动的距离。<br>Placing the switch such that the direction of switch operation is vertical and then applying static load of 2 times operating force to the center of the stem:the travel distance for the switch to come to a stop shall be measured. | 0.3±0.1mm<br>详见附页 1<br>开关（荷重-行程）曲线测试图<br>See Appendix 1<br>Switch (load - travel) test chart |
| 4.3 | 回弹力<br>Return Force | 开关垂直于操作方向放置，在开关驱动件顶端中心下降至全行程后，测量顶端向自由位置转换的力度。<br>The sample switch is installed such that the direction of switch operation is vertical and upon depressing the stem in its center to the whole travel distance, the force of the stem to return to its free position shall be measured. | ≥40gf<br>详见附页 1<br>开关（荷重-行程）曲线测试图<br>See Appendix 1<br>Switch (load - travel) test chart |
| 4.4 | 静止强度<br>Stop Strength | 开关垂直于操作方向放置，从操作方向向驱动件施加 30N 的静负荷持续 60 秒。<br>Placing the switch such that the direction of switch operation is vertical, and then a static load of 30N shall be applied in the direction of stem operation for a period of 60 s. | 无机械和电气损坏<br>There shall be no sign of damage mechanically and electrically |

| 项 目<br>Item | | 试验条件<br>Test Conditions | 要求<br>Requirements |
|---|---|---|---|
| 4.5 | 手柄拔出强度<br>Stem Strength | 开关垂直于操作方向放置，手柄应能承受反方向实施20N.min.操作力。<br>The switch shall be placed perpendicular to the operating direction, and the handle shall be able to withstand the operating force of 20 N.min. applied in the opposite direction. | 试验后手柄、盖板应无脱落、破损，开关应能动作<br>After the test, the handle and cover plate should be free of falling off and damage, and the switch should be able to operate |
| 4.6 | 接线端强度<br>Terminals Strength | 开关接线端应能承受 10N 轴向拉力 10s±1s 的作用。<br>Switch terminals should be able to withstand the axial tension of 10N for 10s + 1s. | 试验后接线端子应无脱落、破损，开关应能动作<br>After the test terminals should be without any fall off, damage, the switch should be able to function |
| 4.7 | 可焊性<br>Solderability | 把试验样品需要焊接的部位浸入焊锡炉中进行测试：<br>Immerse the part of the test sample that needs to be soldered into the soldering furnace for testing:<br>（1）锡炉温度：245±5℃<br>Solder temperature:245±5℃<br>（2）浸入时间：2±0.5s<br>Immersion time: 2±0.5s<br>对于其它步骤参考《GB5095.6-86》试验 12a<br>The other steps please refer to《GB5095.6-86》TEST 12a | 接线端粘锡面积≥95%（除边缘外）<br>Except for the edge, the coating should cover a minimum 95%<br>（Except edges） |
| 5.极限电气性能：<br>Environmental Specification | | | |
| 5.1 | 低温测试<br>Resistance to low temperature | 样品应按照以下试验条件进行测试，试验后样品应放在常温及标准湿度的环境 1 小时候做性能测试：<br>Following the test set forth below the sample shall be left in normal temperature and humidity conditions for 1 h before measurements are made:<br>（1）温度：-40±2℃<br>Temperature：-40±2℃<br>（2）时间：96h<br>time：96h | 接触电阻：≤200mΩ<br>Contact resistance: ≤200mΩ<br>绝缘电阻：≥10MΩ<br>Insulation resistance：≥10MΩ<br>项目：3.3,4.1,4.2,4.3<br>Item: 3.3,4.1,4.2,4.3 |

| 项 目<br>Item | | 试验条件<br>Test Conditions | 要求<br>Requirements |
|---|---|---|---|
| 5.2 | 高温测试<br>Heat resistance | 样品应按照以下试验条件进行测试，试验后样品应放在常温及标准湿度的环境中 1 小时候做性能测试：<br>Following the test set forth below the sample shall be left in normal temperature and humidity conditions for 1 h before measurements are made:<br>（1）温度：85±2℃<br>Temperature：85±2℃<br>（2）时间：96h<br>time：96h | 接触电阻：≤200mΩ<br>Contact resistance: ≤200mΩ<br>绝缘电阻：≥10MΩ<br>Insulation resistance：≥10MΩ<br>项目：3.3,4.1,4.2,4.3<br>Item: 3.3,4.1,4.2,4.3 |
| 5.3 | 温度周期性测试<br>Change of temperature | 根据下面的测试要求进行 5 次循环的温度周期性测试，试验后样品应放在常温及标准湿度的环境中 1 小时后做性能测试。测试期间样品应保持干燥。<br>After 5 cycles of following conditions, the sample shall be allowed to stand under normal temperature and humidity conditions for 1 h. and measurements shall be made. During the test water drops shall be removed.<br> 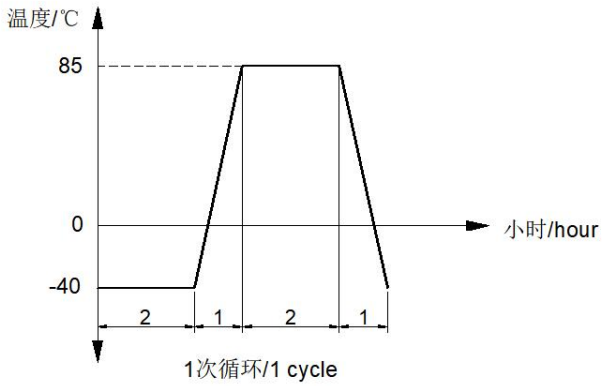 <br> | 接触电阻：≤200mΩ<br>Contact resistance: ≤200mΩ<br>绝缘电阻：≥10MΩ<br>Insulation resistance：≥10MΩ<br>项目：3.3,4.1,4.2,4.3<br>Item: 3.3,4.1,4.2,4.3 |
| 5.4 | 湿温测试<br>Moisture resistance | 样品应按照以下试验条件进行测试，试验后样品应放在常温及标准湿度的环境 1 小时候做性能测试：<br>Following the test set forth below the sample shall be left in normal temperature and humidity conditions for 1 h before measurements are made:<br>（1）温度：60±2℃<br>Temperature：60±2℃<br>（2）相对湿度：90%~95%<br>relative humidity: 90% to 95%<br>（3）时间：96h<br>time：96h<br>（4）擦除水珠<br>Water drops shall be removed. | 接触电阻：≤200mΩ<br>Contact resistance: ≤200mΩ<br>绝缘电阻：≥10MΩ<br>Insulation resistance：≥10MΩ<br>项目：3.3,4.1,4.2,4.3<br>Item: 3.3,4.1,4.2,4.3 |

| 项 目<br>Item | | 试验条件<br>Test Conditions | 要求<br>Requirements |
|---|---|---|---|
| 5.5 | 盐雾试验<br>Salt Mist | 在以下设定条件下进行测量：<br>The switch shall checked after following test:<br>（1）温度：35±2℃<br>Temperature：35±2℃<br>（2）盐溶液浓度：5±1%（质量百分比）<br>salt solution: 5±1%(solids by mass)<br>（3）时间：48±1h<br>time：48±1h | 金属上没有腐蚀斑点<br>No remarkable corrosion shall be recognized in metal part |
| 5.6 | IP 测试<br>IP test | IP67（防水等级）在以下设定条件下进行测量：<br>IP67 (Waterproof grade)is measured under the following setting conditions:<br>开关在水深 1m 处持续 30 分钟，开关内部无水进入，取出晾干后测试。<br>Keep the switch at the water depth of 1 m for 30 minutes, no water will enter the switch, take it out and dry it before testing. | 接触电阻：≤200mΩ<br>Contact resistance: ≤200mΩ<br>绝缘电阻：≥10MΩ<br>Insulation resistance：≥10MΩ<br>项目：3.3,4.1,4.2,4.3<br>Item: 3.3,4.1,4.2,4.3<br>IP67 |
| 6.极限机械性能：<br>Endurance Specification | | | |
| 6.1 | 工作寿命<br>Operation life | 根据下面的测试要求进行测试：<br>Measurement shall be made following the test set forth below:<br>（1）DC 12V,50mA 带负载<br>DC 12V,50 mA resistive load<br>（2）按动速率：2 次/秒<br>Rate of operation: 2 times/s<br>（3）按力：按力的 1.5 倍<br>Operating Force: Operating Force 1.5 times<br>（4）平均无故障寿命：≥10 0000<br>Average Life Expectancy：≥10 0000 | 接触电阻≤500mΩ<br>Contact resistance ≤500mΩ<br>按力：初值的±30%<br>Operating Force: initial value ±30%<br>项目：3.3,4.2,4.3<br>Item: 3.3,4.2,4.3 |

| 项 目<br>Item | | 试验条件<br>Test Conditions | 要求<br>Requirements |
|---|---|---|---|
| 6.2 | 耐冲击<br>Impact Shock Resistance | 加速度 500m/s²，脉冲持续时间 11ms，三个轴线的每个方向上，每个方向三次，共 18 次。<br>Acceleration of 500m/s², pulse duration 11ms, each direction of the 3 axis, 3 times in each direction, a total 18 times.<br> 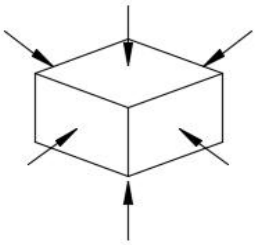 | 项目：3,4.1,4.2,4.3<br>Item: 3,4.1,4.2,4.3 |
| 7.焊接条件：<br>Soldering Conditions: | | | |
| 7.1 | 手工焊接<br>Hand soldering | 请按以下条件进行焊接：<br>Please practice according to below conditions:<br>（1）焊锡温度：≦350℃<br>Soldering temperature: 350℃ Max<br>（2）连续焊接时间：≦3s<br>Continuous soldering time: 3s Max | |

| 项 目<br>Item | | 试验条件<br>Test Conditions | | 要求<br>Requirements |
|---|---|---|---|---|
| 7.2 | 波峰焊<br>Conditions for wave soldering<br>适用于直插式开关<br>Applied to plug-in switch | 项目 Items | 条件 Condition | |
| | | 助焊剂附着量<br>Flux built-up | 不附着于零部件贴装面的程度<br>Mounting surface should not be coated with flax | |
| | | 预热温度<br>Preheating temperature | 印刷电路板焊接面的周围温度 100℃ max<br>Ambient temperature of the soldered surface of PC board. 100℃ max | |
| | | 预热温度时间<br>Preheating time | 60s max | |
| | | 焊接温度<br>Soldering temperature | 260℃ max | |
| | | 焊接浸渍时间<br>Continuous dipping time | 5s max | |
| | | 焊接次数<br>Number of soldering | 2 次以下<br>2 times max | |
| | | 由于 PCB 的材料、尺寸、厚度等不同，PCB 从开关表面获得的温度也会有很大产不同，因此，焊接时千万小心不要让开关表面温度超过 240℃.<br>Due to the difference of PCB material, size and thickness, the temperature obtained by PCB from the switch surface will also be very different. Therefore, be careful not to let the switch surface temperature exceed 240 ℃ during welding | | |

注意事项：
Cautions:

1、开关浸焊后，注意不要用溶剂清洗开关。
After switches were soldered,please do not clean switches with solvent.

2、防止助焊剂从开关的上部流入到开关的内部。
Safeguards the switch assembly against flux penetration from its solvent.

3、注意不要施加超负荷的压力或晃动开关。
Please be cautions not to give excessive static load or shock to switches.

4、开关浸焊后，印刷基板注意不要叠放。
Please be careful not to pile up P.W.B. after switches were soldered.

5、保管时尤其应注意避开高湿高温和有腐蚀性气体的环境。如需要长时间保存，请不要打开包装箱。如已拆包物料未使用完，请及时按原包装方式密封保存。
Pay special attention to avoid the environment with high humidity, high temperature and corrosive gas during storage. If it needs to be stored for a long time, please do not open the packing box. If the unpacked materials are not used up, please seal them in time according to the original packaging method.

KHON®

温州康宏电子有限公司

Professional Manufacturer Since 2000

# 产品规格

工作方式: 瞬时接触
触点形式: 单刀单掷
安装方式: 直立插式

## 机械性能

动作力: 230±50gf
电气寿命: 10,0000次

## 工作环境

环境温度: -40～+85℃
环境湿度: (40℃)≤95%

## 电气性能

额定电负荷: 50mA @ 12V DC
耐电压: 250VAC /1分
接触电阻: 100mΩ Max.
绝缘电阻: 100MΩ Min.
行程: 0.3±0.1mm
IP等级: IP67

## 物料

7. 盖板: GP.PA66 黑色
6. 手柄: GP.PA66 黑色
5. 橡胶垫: 橡 胶
4. 防水膜: PIF薄膜
3. 簧片: 不锈钢镀银
2. 底座: GP.PA66 黑色
1. 接线片: 黄铜镀银

## 包装

散装
内包装: 塑料袋
外包装: 纸箱

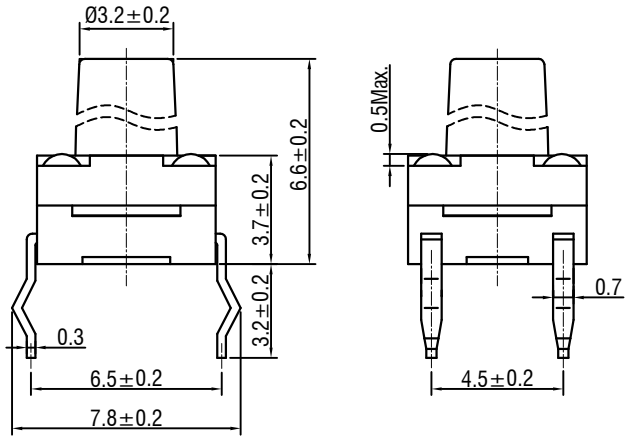


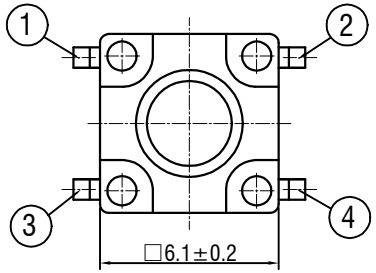


CIRCUIT DIAGRAM

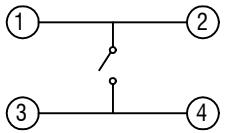


P.C.B. LAYOUT

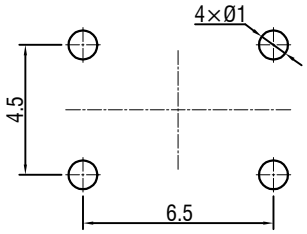


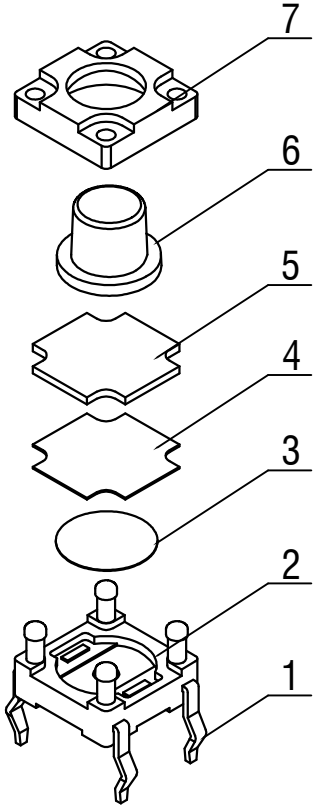


| 借通用件登记 |
|---|
| |
| 描 图 |
| |
| 校 描 |
| |
| 旧底图总号 |
| |
| 签 字 |
| |
| 日 期 |

| 标记 | 处数 | 更改文件号 | 签 名 | 日 期 |
|---|---|---|---|---|
| | | | | |
| | | | | |
| | | | | |

| | | | | |
|---|---|---|---|---|
| 设 计 | 余嘉诚 | 防水轻触开关 | TSW06111-066B331BA | |
| 审 核 | 朱树清 | 视图 | 阶 段 | 标 记 | 质 量 | 比 例 |
| 批 准 | 徐君辉 | Dirnensions are shown:mm(inches) | | | | 4:1 |
| | | 2026.09.29 | 第1张 | 共1张 | | |
| | | | 温州康宏电子有限公司 | | | |

http://www.khan.cn

# 温州康宏电子有限公司

| | | |
|---|---|---|
| 产品名称<br>Product name: | 客户名称<br>Customer: | 测试日期<br>Test Date: |
| 产品型号<br>Model No: | 制造批号<br>Lot No: | 测试人员<br>Tester: |

| NO 1-7 | g | mm |
|---|---|---|
| CP | 244.89 | 0.32 |
| CL | 87.78 | 0.35 |
| CP-CL | 157.10 | 64% |
| CP-RL | 181.52 | 74% |
| RP | 215.23 | 0.36 |
| RL | 63.37 | 0.41 |
| SWon | 1.35 | 0.00 |
| SWoff | 0.00 | 0.00 |
| R | 5005.00 | 0.00 |

| NO 1-8 | g | mm |
|---|---|---|
| CP | 233.97 | 0.32 |
| CL | 80.04 | 0.36 |
| CP-CL | 153.93 | 66% |
| CP-RL | 177.37 | 76% |
| RP | 212.12 | 0.37 |
| RL | 56.60 | 0.41 |
| SWon | 0.00 | 0.00 |
| SWoff | 0.00 | 0.00 |
| R | 5005.00 | 0.00 |

| NO 1-9 | g | mm |
|---|---|---|
| CP | 248.87 | 0.33 |
| CL | 93.23 | 0.36 |
| CP-CL | 155.64 | 63% |
| CP-RL | 187.38 | 75% |
| RP | 211.52 | 0.37 |
| RL | 61.49 | 0.42 |
| SWon | 1.57 | 0.00 |
| SWoff | 0.00 | 0.00 |
| R | 5005.00 | 0.00 |

| NO 1-10 | g | mm |
|---|---|---|
| CP | 209.47 | 0.28 |
| CL | 71.66 | 0.31 |
| CP-CL | 137.82 | 66% |
| CP-RL | 161.38 | 77% |
| RP | 168.82 | 0.25 |
| RL | 48.10 | 0.27 |
| SWon | 2.56 | 0.00 |
| SWoff | 0.00 | 0.00 |
| R | 5005.00 | 0.00 |

| NO 1-11 | g | mm |
|---|---|---|
| CP | 240.83 | 0.34 |
| CL | 86.41 | 0.37 |
| CP-CL | 154.42 | 64% |
| CP-RL | 171.14 | 71% |
| RP | 223.01 | 0.40 |
| RL | 69.69 | 0.44 |
| SWon | 0.55 | 0.00 |
| SWoff | 0.00 | 0.00 |
| R | 5005.00 | 0.00 |

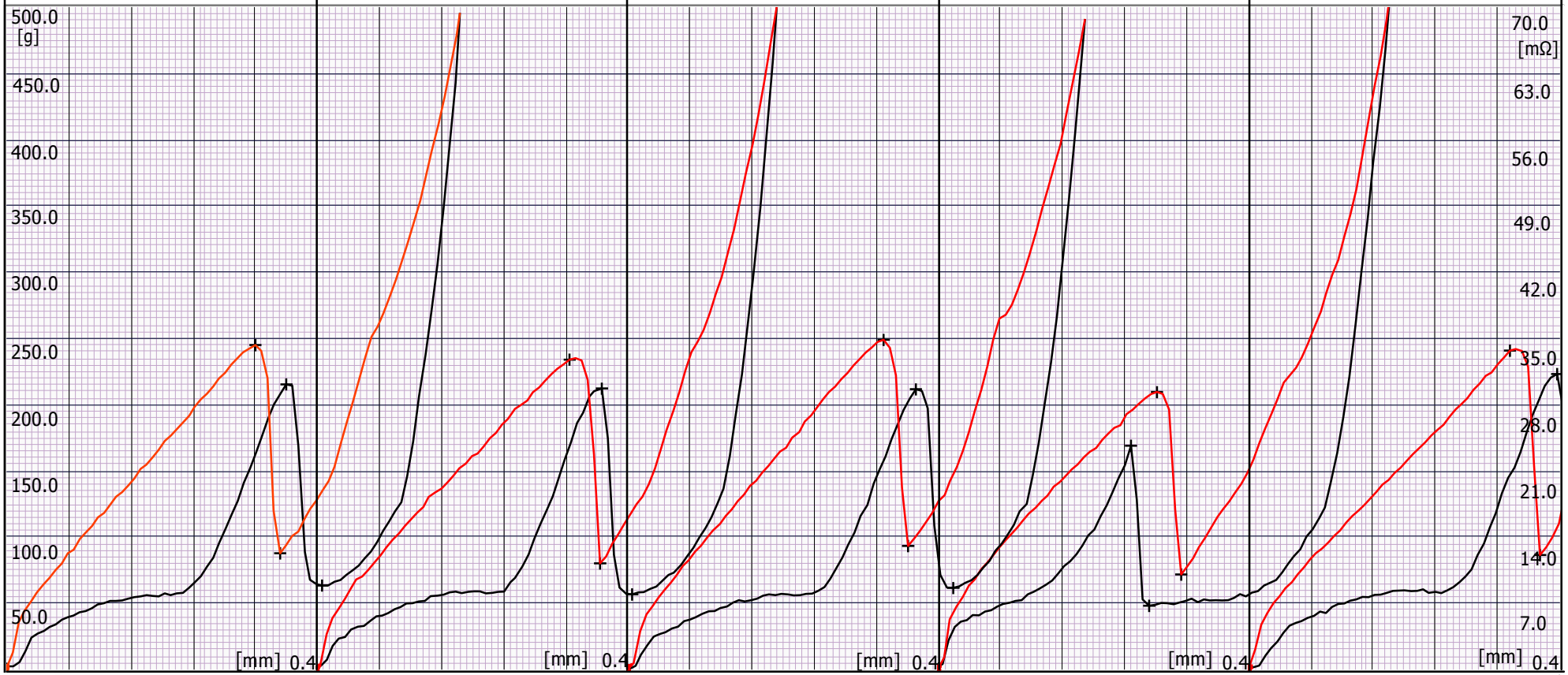

KHON®

温州康宏电子有限公司

Professional Manufacturer Since 2000

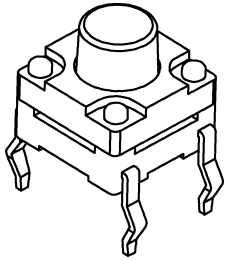

图1
成品

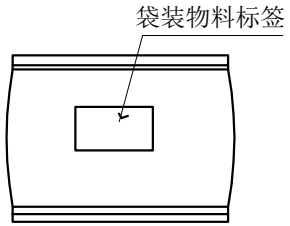


图2
成品袋装

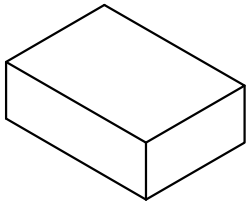

图3 内盒包装

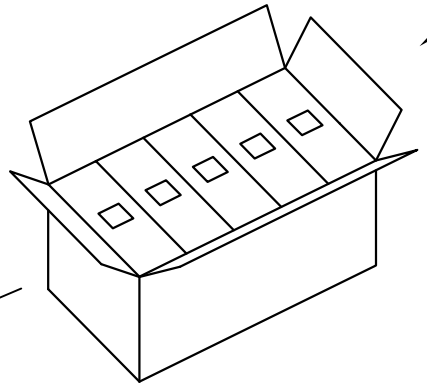

图4 外箱

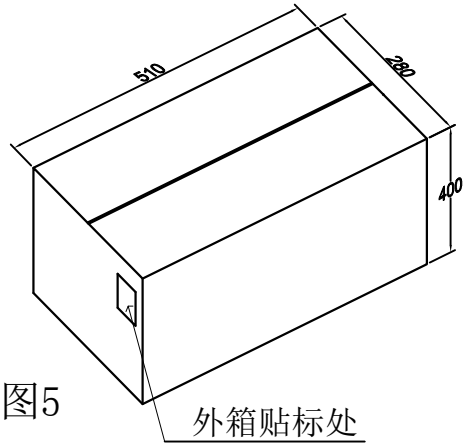


图5

说明：

1：如图2，袋装后贴上物料标签，每小袋装1000pcs。

2：如图3，每内盒装8小袋，装盒后贴上物料标签，数量为8X1000pcs。

3：如图4，每外箱装10内盒，数量为10X(8X1000pcs)。

4：如图5,封箱贴上物料标签。

| | | | | | | | | | |
|---|---|---|---|---|---|---|---|---|---|
| 借通用件登记 | 标记 | 处数 | 更改文件号 | 签 名 | 日 期 | 轻触开关 | TSW06111-066B331BA | | |
| 描 图 | 设 计 | | 余嘉诚 | | | 视图 | 阶 段 | 标 记 | 质 量 | 比 例 | 版本 |
| 校 描 | 审 核 | | 朱树清 | | | Dirnensions are shown:mm(inches) | | | | 1:1 | B/0 |
| 旧底图总号 | 批 准 | | 徐君辉 | | | 2026.09.29 | 第1张 | | 共1张 | | |
| 签 字 | | | | | | | 温州康宏电子有限公司 | | | | |
| 日 期 | | | | | | | | | | | |

http://www.khan.cn