Specification for Li-ion Rechargeable cylindrical battery

圆柱锂离子电池 规格书

MODEL/ 型号：

18650-2600mAh 3C

Prepared By 制作	Checked By 审核	Approved By 批准	Effective date 生效日期
曾献国	黄优涛	陈勇	20250227

	Signature 签字	Date 日期
Customer Approval 客户承认		
	Company Name： 公司名称：	
	Company Stamp： 客户印章：	

1. Application 适用范围

本规范描述了康胜公司生产的可充电锂离子电池的有关参数要求和检验规则；
本规范符合国家 GB 31241-2022 便携式锂离子电池和电池组安全要求。
This Specification is applied to KAMCY rechargeable lithium ion battery of the steel shell cylinder type for various applications in mobile communication devices and portable power systems;The specification is base on the technical specification of GB 31241-2022.

2. Main performance indicators 主要性能指标

No.	Items 项目	Specifications 规格
1	Model 型号	18650-2600mAh 3C
2	Nominal capacity 标称容量	**2600mAh** (Standard charge /0.2C discharge, 2.75V cut-off) (标准充电后，0.2C 放电至 2.75V)
3	Min Capacity 最小容量	**2550mAh** (Standard charge /0.2C discharge, 2.75V cut-off) (标准充电后，0.2C 放电至 2.75V)
4	Nominal Voltage 标称电压	3.7V
5	Max. Charge Voltage 最大充电电压	4.20V
7	Standard Discharge Cut-off Voltage 标准放电截止电压	2.75V
8	Standard Charging Mode 标准充电模式	CC-CV (cut-off current is 52mA) 恒流恒压(恒压截止电流为 52mA)
9	Standard Charge Current 标准充电电流	1300mA
10	Max. Charge Current 最大充电电流	2600mA
11	Charge Time 充电时间	200 分钟(25±3°C) 200 min (25±3°C)
12	Max. Continuous Discharge Current 最大持续放电电流	60℃＞T≥45℃ 0.5C-1300mA 45℃＞T≥25℃ 2C-5200mA 25℃＞T≥0℃ 3C-7800mA 0℃＞T≥-20℃ 0.5C-1300mA
14	Standard Diameter of battery (include PET)电池标准直径(包含 PET 外壳)	18.35 -0.05mm/+0.15mm
15	Standard Height of battery (include PET)电池标准高度(包含 PET 外壳)	65.10 -0.05mm/+0.15mm

16	Weight 电池重量	45.0g±1.5g

17	AC Impedance (at 1000Hz 30%SOC) 交流内阻(at 1000 Hz 30%SOC)		≤18mΩ	
18	Operating temperature (surface temperature) 工作环境温度	Charge 充电	0°C<T≤20°C	Max. Charge Current 最大充电电流：1300mA
			20°C<T<45°C	Max. Charge Current 最大充电电流：2600mA
		Discharge 放电	-20°C～60°C	
19	Storage temperature 储存温度	1 months 1 个月	-20°C～45°C	
		3 months 3 个月	-10°C～35°C	
		1 year 1 年	0°C～25°C	
20	Overheat Protection 过热保护	Stop discharging when the cell surface reaches 65℃ 电芯表面温度达到 65℃，停止放电		

Note：

If the cell is kept as ex-factory status (30% of charge), the capacity recovery rate is more than 90% of standard discharge capacity.

如果存储时电芯为出厂状态(约 30%的充电容量)，这种情况下，恢复的容量≥标准放电容量的 90% 。

3. Configuration 电芯示意图

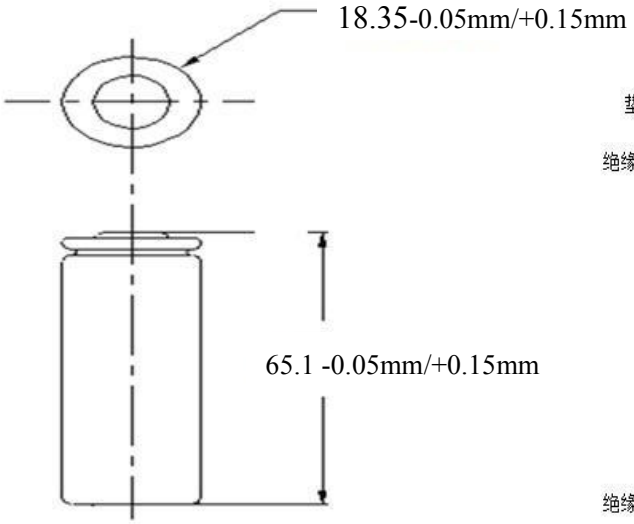

电芯尺寸图

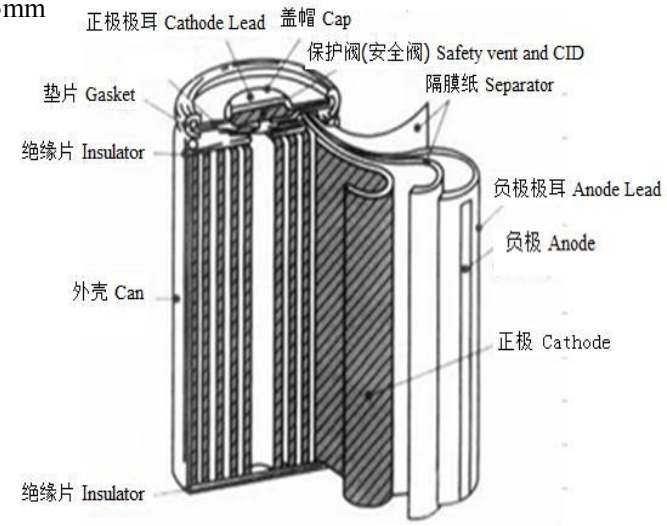

电芯剖面图

4. Cell Marking 电芯喷码

See below： Standard Marking

标准喷码见下图：

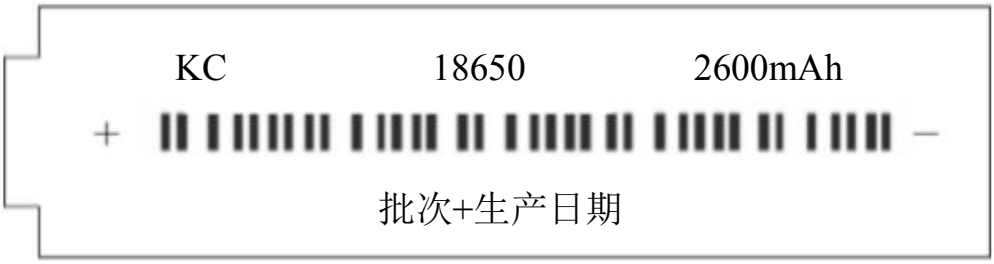

a. Manufacture Name 公司名称

KC (江西康胜新能源有限公司的缩写)
KC (Trade name of Jiangxi Kangsheng New Energy Co.,Ltd.)

b. Chemical system 化学体系

Li-ion

c. Nominal voltage 标称电压

3.7V

d. Nominal energy 标称能量

9.62Wh

e. Cell typle 电池型号

18650-2600mAh 3C

f. Lot number 生产日期及地点

CC21
C:年份代码 A-2021 年,B-2022 年···2023 年为 C,以此类推;
B:月份代码 A-1 月，B-2 月···L-12 月，以此类推；
21:批次
01:线体代码 1-1 号线···4-4 号线···8-8 号线
022123:包装日期 022123:月 日 年，2023 年 2 月 21 日
C: Year 2021 as A, 2022 as B···2023 as C...;
B: Month January as A, February as B---December as L...;
21: Batch number
01:Line 1 :Line 1···4:Line 4···8:Line 8...
022123:Dete of packaging 022123:Month day year,January 21,2023

5. Characteristic 电池性能

a. Environmental conditions 测试环境

Unless otherwise specified, all tests stated in this specification are conducted at temperature 25°C±3°C and humidity under 65%.
若没有特别说明，电池均在环境温度 25°C±3°C,相对湿度小于 65%的条件下进行测试。

b. Measuring equipment 测试设备

（1）Amp-meter and volt-meter 容量电压测试
The amp-meter and volt-meter should have an accuracy of the grade 0.5mA / mV or higher.
容量电压测试设备的精度需达到 0.5mA/mV 以上。
（2）Slide caliper 尺寸测试
The slide caliper should have 0.01 mm scale.
测量尺寸时量具需达 0.01 mm 以上精度。
（3）Impedance meter 内阻测试
The impedance meter with AC 1kHz should be used.
内阻测试在 AC 1kHz 的条件下进行。

c. Standard charge 标准充电

Charging the cell CC-CV with charge current 1300mAh, constant voltage 4.20V and 52mA cut-off in CV mode at 25°C±3°C for capacity.
在 25°C±3°C 环境温度下，充电电流为 1300mAh,当电池电压达到 4.20V 时，改为恒压充电，截止电流 52mA。

d. Standard discharge capacity 标准放电容量

Discharge current of 1300mA (0.5C) with 2.75V cut-off at 25°C±3°C within 1 hour after the standard charge.
标准充电搁置 lh 内，在 25°C±3°C 环境温度下，1300mA (0.5C)电流放电至 2.75V 的容量。

5.1 Electrical Characteristic 电化学性能

No.	Items 项目	标准 Standard	测试方法 Test Method
1	Rate discharge capacity (25°C±3°C) 倍率容量 (25°C±3°C)	0.2C≥100% 0.5C≥99% 1.0C≥98% 2.0C≥97% 3.0C≥96%	After standard charged, rest for 30mins, then discharge at 0.2C/0.5C/lC/2C/3C to2.75V.within 3 cycles, the battery is up to standard. 电池标准充电后，搁置 30mins,分别以 0.2C、0.5C、1C、2C 、3C 放电至 2.75V。循环三次，当有一次达到标准，即达到标准要求。
2-1	capacity retention and recovery (25°C±3°C) 容量保持及恢复能力(25°C±3°C)	Retention capacity≥90% Recovery capacity≥95 % 剩余容量≥90% 恢复容量≥95 %	After standard charged, stored for 28 days at 25±3°C, then discharge at 0.5C to 2.75V measuring retention capacity; Then standard charge,0.5C discharge to 2.75V measure recovery capacity. 电池标准充电后，在温度 25°C±3°C 下放置 28 天，0.5C 放电至 2.75V,测量电池的剩余容量；然后标准充电，0.5C 放电至 2.75V,测试电池的恢复容量。
2-2	High Temperature Performance 高温放电性能	Discharge capacity/Initial capacity≥85% 放电容量/初容量≥85%	After standard charged, stored for 5h at 55°C ±3°C, then 0.5C discharge to 2.75V at 55 °C ±3 °C measuring retention capacity. 电池标准充电后，在温度 55°C±3°C 下放置 5 小时，然后在 55°C 土 3°C 下 0.5C 放电至 2.75V,测量电池的剩余容量。
2-3	capacity retention and recovery (55°C/7days) 容量保持及恢复能力 (55℃/7 天)	Retention capacity≥85% Recovery capacity≥95% 剩余容量≥85% 恢复容量≥95%	After standard charged, stored for 7 days at 55±3°C, then discharge at 0.5C to 2.75V at 25°C ±3°C measuring retention capacity; Then standard charge,0.5C discharge to 2.75V measure recovery capacity. 电池标准充电后，在温度 55°C±3°CT 放置 7 天，然后在 25°C ±3°C 下 0.5C 放电至 2.75V,测量电池的剩余容量；然后标准充电，0.5C 放电至 2.75V,测试电池的恢复容量。
3	Low Temperature Performance 低温放电性能	Discharge capacity/Initial capacity60% 放电容量/初始容量 60%	After standard charge, stored in the temperature of -20°C±2°C for 4h, then 0.5C CC discharge to 2.75V. 标准充电后，放入 -20°C±2°C 低温箱中恒温 4h,然后 0.5C 放电至 2.75V。

4	Cycle Life (25°C±3°C) 循环寿命 (25°C±3°C)	0.5Ccharge/discharge 500 cycles≥80% 0.5C 充电/3C 放电 500 次≥80%	Charge: 0.5C CC charge to 4.20V, then CV to 0.02 C, rest for 10mins; A) Discharge:3.0C CC discharge to 2.75V rest for l0mins. 充电：0.5C 恒流充电至 4.20V,然后恒压至 0.02C 截止，搁置 10mins。 放电：3.0C 放电到 2.75V,搁置 10mins。

5.2 Safety Characteristic 安全性能

序号 NO.	Item 项目	Standard 标准	Test Method 测试方法
1	Overcharge 过充性能	No fire and No explosion 不起火、不爆炸	After standard full charge, rest for l0mins; charge the cells to 4.6V with current of 3C and keep the upper limit of voltage for 7 hours or temperature drops to 20% below the peak . Observe and compare the battery's appearance 标准充电满电后，搁置 10mins；将电芯以 3C 的电流充电至 4.6V 并保持最高电压持续充电 7 小时或电池温度下降到比峰值低 20%。
2	Forced discharge 强制放电	No fire and No explosion 不起火、不爆炸	The battery to be discharged with standard discharging condition, Inverse charge current =1C；time: ≥90mins 按标准放电要求对电池放电，以 1C 反向充电，充电时间不低于 90mins。
3	Short Circuit test 短路性能	No fire and No explosion 不起火、不爆炸	After standard charged, and short the positive and negative terminals with wire, and the resistance of 80±20mΩ. Tests are to be conducted at 20°C±5°C and 55°C ±5°C respectively, The battery is to discharge until a fire or explosion is obtained, or until it has reached a completely discharged state of less than 0.2V and the battery case temperature has returned to ±10°C of ambient temperature. 标准充电后，分别置于 20°C±5°C 和 55°C ±5°C 环境下，正负极端 80±20mΩ电阻短接。样品保持测试直到爆炸起火或样品达到完全放电状态(样品电压低于 0.2V)或样品表面温度降低至测试温度±10°C。

4	Crush test 挤压实验	No fire and No explosion 不起火、不爆炸	After standard charged, and crushed between two flat surfaces, the applied force is 13±l kN by hydrocylinder, once the maximum pressure has been obtained then release pressure. 标准充电后，在两个平面间承受挤压，由液压油缸施加 13± l kN 的挤压力，一旦挤压力达到最大即开始卸压。
5	Imapcat test 重物冲击测试	No fire and No explosion 不起火、不爆炸	After standard charged, test sample battery is to be placed on a flat surface. 15.8 ±0.1 mm diameter bar is to be placed across the center of the sample. 9.1 ±0.46kg weight is to be dropped from a height of 610 ±25 mm onto the intersection of the steel bar and the sample. 标准充电后，将样品放置在平台，直径 15.8 ±0.1mm 的钢棒横穿样品中心放置，9.1 ±0.1 Kg 的重锤从 610±25mm 的高度跌落到钢棒和样品交叉处。
6	Heating test (130°C) 热滥用测试	No fire and No explosion 不起火、不爆炸	After standard charged, and put into incubator with nature air or circulating air convecting, heat by velocity of 5°C ±2°C per minute to 130°C±2°C, and maintain for 30minutes. 标准充电后，放于自然或循环空气对流的恒温箱中，温度以 5°C ±2°C 每分钟的速率升至 130°C±2°C 并保持 30 分钟。
7	Temperature Cycling Test 温度循环试验	No leakage, No fire, No explosion 不泄漏，不起火、不爆炸	Standard charged, and placed in a test chamber and subjected to the following cycles: a) Raising the temperature to 72°C ±2°C within 30 minutes and maintaining this temperature for 6 hours; b) Reducing the temperature to minus -40°C ±2°C within 30 minutes and maintaining this temperature fbr 6 hours; c) Repeating the sequences for 10 times, and storing the cells for 24 hours in the condition of temperature 20°C±5°C. 标准充电后电池放置在测试箱内并做如下处理： a) 30min 内温度升至 72°C±2°C，搁置 6 小时； b) 30min 内温度降至-40°C±2°C，搁置 6 小时； c) 循环 10 次，将电芯在 20°C±5°C 下搁置 24 小时。
8	Free drop test 自由跌落试验	No fire, No explosion 不起火，不爆炸	The fully charged battery drops on the concrete ground from height (1m), total 3 times, to obtain the shock of random directions. 充满电的电池三次从 1m 高的地方跌落到混凝土地面，以此获得随机方向的冲击。

5.3 Environment Adaptation Performance 环境适应性能

NO. 序号	Item 项目	Standard 标准	Test Method 测试方法
1	Altitude/Low pressure simulation test 高空低压模拟测试	No leakage, No fire, No explosion 不泄漏，不起火、不爆炸	Standard charged and stored for 6 hours in an vacuum environment with pressure of less than 11.6kPa and temperature of 20°C±5°C. 标准充电后，储存在 20°C±5°C、大气压≤11.6 kPa 的真空环境中储存 6 小时。
2	Vibration test 振动试验	No leakage, No fire, No explosion 不泄漏，不起火、不爆炸	Fully charge batteries with the standard method. Next, measure their initial state of batteries. Then, place batteries on the vibration table and set vibration frequency & amplitude for them. Batteries will beswept from 7Hz to 200Hz in X, Y and Z directions respectively for 12times, about 3 hours. 电池标准方式充满电后，测量电池初始状态，安装在振动台面上，按下面的振动频率和对应的振幅调整好试验设备，X、Y、Z 三个方向每个方向上按照 7Hz～17.62Hz(振动加速度 a1=g)、17.62Hz～49.84Hz(位移振幅 0.8mm)、49.84Hz～200Hz(振动加速度 a2=8g)、200Hz～7Hz 过程振动 12 次循环，每个方向上振动约 3 小时

6. Package 包装

Small Box 包装内盒 | Big Box 包装外箱 | Pallet 卡板

100Pcs cells in a small box,4 small box in a big box,50 big box in a pallet
(每小箱装100个电芯，一个大箱装4个小箱，一个卡板放50个大箱)

Note 备注：

Package label information includes model, capacity, voltage, internal resistance, quantity, date, and packing no. 包装盒信息包括；型号、容量、电压、内阻、数量、日期、装箱编号。

7. Warranty Period & Product Liability 保质期及产品责任

Warranty period of this product is 12 months from date of packaging. **Jiangxi Kangsheng New Energy Co.,Ltd.** is not responsible for the troubles caused by mishandling of the battery which is against the instructions in this specification.

保质期是从包装日期开始起 **12** 个月；江西康胜新能源有限公司对因没有按本规格书规定操作而导致的意外不负责任。

8. Warnings and Cautions in Using the Battery 电池使用警告及注意事项

To prevent a possibility of the battery from leaking, heating or explosion please observe the following precautions:

为防止电池可能发生泄漏,发热、爆炸，请注意以下预防措施：

- When using a new battery for the first time or after long term storage, please use the battery charger specifically for that purpose fully charge the battery before use.
  在使用新电池前，或者长期存放后第一次使用电池，在使用前请使用专用充电器将电池充满电。

- Do not disassemble or open, crush, bend or deform, puncture, or shred;
  请勿拆解或打开、挤压、弯折、变形、刺穿、敲碎；

- Do not modify or remanufacture, attempt to insert foreign objects into the battery, immerse or expose to water or other liquids such as water, seawater, drinks such as soft drinks, juices, coffee or others, or expose to fire, explosion, or other hazard.
  请勿修改或改装，不要试图将外物插入电池，不要浸入或暴露在水或其它液体中如淡水、海水、 饮料（果汁、咖啡等），远离火源、爆炸物和其他危险；

- Do not short circuit a battery or allow metallic or conductive objects to contact the battery terminals.
  请勿使电池短路，也不要让金属或其它导体接触电池接电端子；

- When use the battery , must to ensure the charge and discharge voltage of the battery is between 2.75V to 4.20V.
  使用电池时需保证每个电池的充放电上下限电压在 2.75V 至 4.20V 之间。

- Avoid dropping the phone or battery. If the phone or battery is dropped, especially on a hard surface, and the user suspects damage, take it to a service center for inspection.
  不要跌落主机或电池，如果主机或电池不慎跌落（尤其在硬表面上），用户怀疑电池损坏，则应 找服务中心检查；

- The battery replacement shall be done only by either cells supplier or device supplier and never be done by the user.
  更换电芯应由电芯供应商或设备供应商完成，用户不得自行更换。

- Replace the battery only with another battery that has been qualified with the system per standard. Use of an unqualified battery may present a risk of fire, explosion, leakage, or other hazard.

更换电池时只能使用通过标准认证的电池，使用未经认证的电池可能存在起火、爆炸、或其它危险；

- Don't keep a battery at rest for a long time （over 6 months）. Safety accident may happen when recharging battery which has a rest for a long time.
  避免电池长时间放置不用（超出 6 个月），长期放置不用的电池重新充电时可能会发生安全问题。

- In the event of a battery leak, do not allow the liquid to come in contact with the skin or eyes. If contact has been made, wash the affected area with large amounts of water and seek medical advice.
  如果电池发生漏液，不要让电池接触皮肤和眼睛，如果接触不幸发生，则用大量的水冲洗接触部位或寻求医生帮助；

- Battery usage by children should be supervised. Seek medical advice immediately if a battery has been swallowed 儿童使用电池应受到监督；如果电池被吞食了，立即就医；
- Never disassemble cells. The disassembling may generate internal short circuit in the cell, which may cause firing or other problems.
  在任何情况下不得拆卸电芯。拆卸电芯可能会导致内部短路，进而引起着火及其它问题。

- Never incinerate nor dispose the cells in fire. These may cause firing of the cells, which is very dangerous and is prohibited.
  在任何情况下，不得燃烧电芯或将电芯投入火中，否则会引起电芯燃烧，这是非常危险的，应绝对禁止。

- Do not remove the outer sleeve from a battery pack nor cut into its housing.
  不要把电池（电池组）的外套去除。

- Do not mix our batteries with other battery brands or batteries of a different chemistry such as alkaline and zinc carbon.
  不要将我公司司电池与其他品牌的电池或者不同种类的电池，比如碱性锌电池混用。

- Do not mix new batteries in use with semi-used batteries, over-discharge may occur.
  不要将新旧电池混用，可能会导致过放电。

- Promptly dispose of used batteries in accordance with local regulations.
  按当地法规迅速处理报废电池。

9. Ship and Storage 运输和贮存

9.1 ship 运输

The cells might be damaged during shipping by shock. If any abnormal features of the cells are found such as deformation of the cell package, smelling of an electrolyte, an electrolyte leakage and others, the cells shall never be used any more. The Cells with a smell of the electrolyte or a leakage shall be placed away from fire to avoid firing.

电芯在运输过程中可能因撞击等原因而损坏，若发现电芯有任何异常特征，如外壳破损，闻到电解液气味，电解液泄漏等，该电芯不要使用。有电解液泄漏或闻到异常味道的电池应远离火源以避免着火。

9.2 Storage 贮存

The cell shall be stored at the environmental condition of -20°C～45°C and 65%±20% RH. The voltage for long time storage shall be 3.60V-3.65V range. If the cell has to be storied for a long time （Over 3 months）, the environmental condition should be: Temperature: 0°C～25°C Humidity: 65%±20%RH； please activate the battery once every 3 months according to the following method: The 0.5C current is charged to a voltage of 3.65V, and then the constant voltage is cut off to 0.01A.

电芯储存必须在温度-20°C～45°C ,相对湿度 65%±20%的环境条件下。长期贮存电压为 3.60V～3.65V。如果电池需要长期存储（超过 3 个月）须置于温度为 0°C～25°C、湿度为 65%±20%RH 的环境中。 请每隔 3 个月激活一次电池，方法为：0.5C 电流充电至电压达到 3.65V，然后恒压至 0.01A 截止。

10. Revision Page 修订记录

Version 版本	Date 日期	Descriptions 修改内容	Approved By 审核
A0	20250227	新版发行	黄优涛