Product Summary

$V_{(BR)DSS}$	$R_{DS(on)TYP}$	I_D
40V	0.7mΩ@10V	315A
	1.0mΩ@4.5V	

合肥矽普半导体
Siliup Semiconductor Technology Co.Ltd
技术 品质 服务
www.siliup.com

Feature

- Fast Switching
- Low Gate Charge and Rdson
- Advanced Split Gate Trench Technology
- 100% Single Pulse avalanche energy Test
- 175℃ Junction Temperature

Applications

- PWM Application
- Hard switched and high frequency circuits
- Power Management

Package

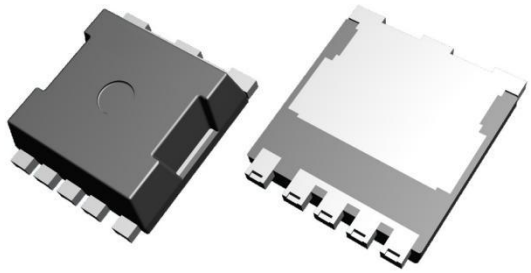

sTOLL

Circuit diagram

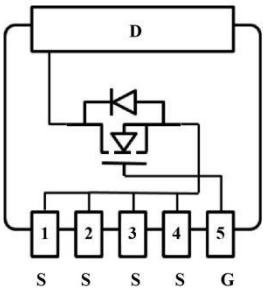

Marking

SP40N01ABGMT :Device Code
** :Week Code

Order Information

Device	Package	Unit/Tape
SP40N01ABGMT	sTOLL	2000

Absolute maximum ratings (Ta=25℃,unless otherwise noted)

Parameter	Symbol	Rating	Units
Drain-Source Voltage	V_{DS}	40	V
Gate-Source Voltage	V_{GS}	±20	V
Continuous Drain Current(Tc=25℃)	I_D	315	A
Continuous Drain Current(Tc=100℃)	I_D	241	A
Pulsed Drain Current	I_{DM}	1260	A
Single Pulse Avalanche Energy[1]	E_{AS}	1296	mJ
Total Power Dissipation(Tc=25℃)	P_D	450	W
Total Power Dissipation(Tc=100℃)	P_D	225	W
Thermal Resistance Junction-to-Case	$R_{\theta JC}$	0.34	℃/W
Storage Temperature Range	T_{STG}	-55 to 175	℃
Operating Junction Temperature Range	T_J	-55 to 175	℃

Electrical characteristics (Ta=25℃, unless otherwise noted)

Parameter	Symbol	Conditions	Min.	Typ.	Max.	Unit
Static Characteristics						
Drain-Source Breakdown Voltage	BV_{DSS}	VGS=0V , ID=250uA	40	-	-	V
Drain-Source Leakage Current	I_{DSS}	VDS=32V , VGS=0V , TJ=25℃	-	-	1	uA
Gate-Source Leakage Current	I_{GSS}	VGS=±20V , VDS=0V	-	-	±100	nA
Gate Threshold Voltage	$V_{GS(th)}$	VGS=VDS , ID=250uA	1.3	1.7	2.3	V
Static Drain-Source On-Resistance	$R_{DS(ON)}$	VGS=10V , ID=50A	-	0.7	0.88	mΩ
		VGS=4.5V , ID=50A	-	1.0	1.35	
Gate Resistance	R_G	VDS=20V , VGS=0V , f=1MHz	-	3.0	-	Ω
Dynamic characteristics						
Input Capacitance	C_{iss}	VDS=20V , VGS=0V , f=1MHz	-	6329	-	pF
Output Capacitance	C_{oss}		-	3659	-	
Reverse Transfer Capacitance	C_{rss}		-	142	-	
Total Gate Charge	Q_g	VDS=20V , VGS=10V , ID=200A	-	93	-	nC
Gate-Source Charge	Q_{gs}		-	31	-	
Gate-Drain Charge	Q_{gd}		-	23	-	
Gate Pleteau Vlotage	$V_{pleteau}$		-	3.3	-	V
Switching Characteristics						
Turn-On Delay Time	$T_{d(on)}$	VDS=20V , VGS=10V ,RG=3.5Ω , ID=200A	-	12	-	nS
Rise Time	T_r		-	7	-	
Turn-Off Delay Time	$T_{d(off)}$		-	25	-	
Fall Time	T_f		-	13	-	
Diode Characteristics						
Diode Forward Voltage	V_{SD}	VGS=0V , IS=1A , TJ=25℃	-	-	1.2	V
Maximum Body-Diode Continuous Current	I_S		-	-	315	A
Reverse Recovery Time	T_{rr}	IS=50A , di/dt=100A/us , TJ=25℃	-	72	-	nS
Reverse Recovery Charge	Q_{rr}		-	88	-	nC

Note :

1. The test condition is VDD=20V,VGS=10V,L=0.5mH,RG=25Ω

Typical Characteristics

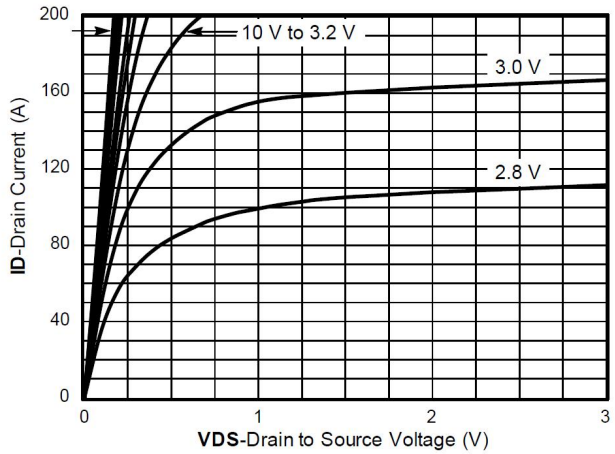

Output Characteristics

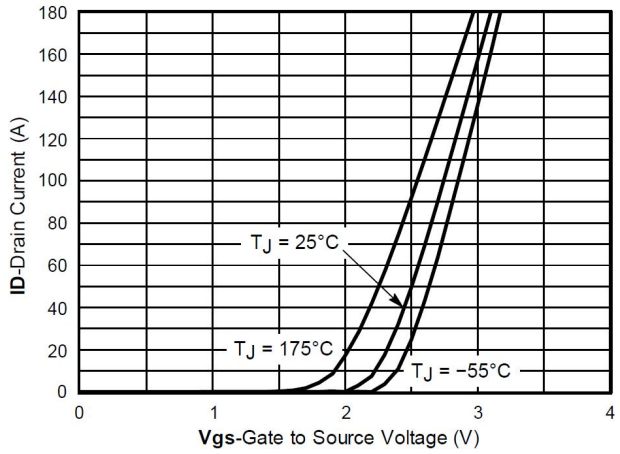

Transfer Characteristics

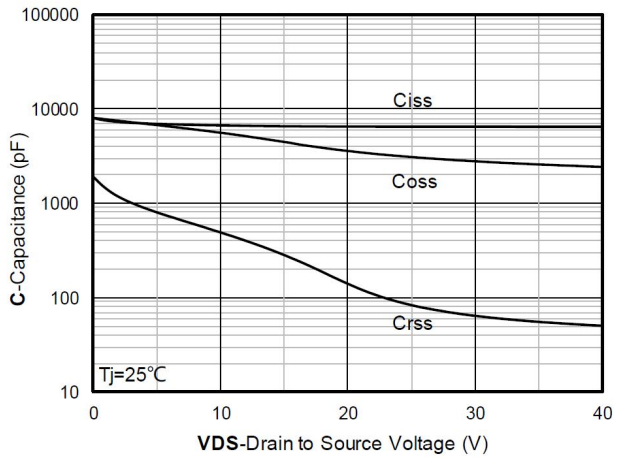

Capacitance Characteristics

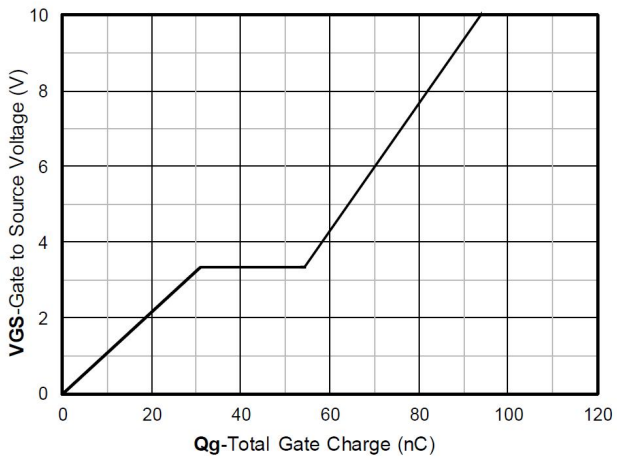

Gate Charge

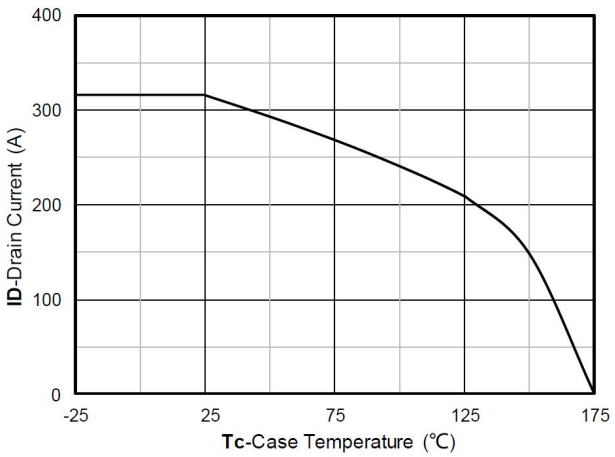

Current dissipation

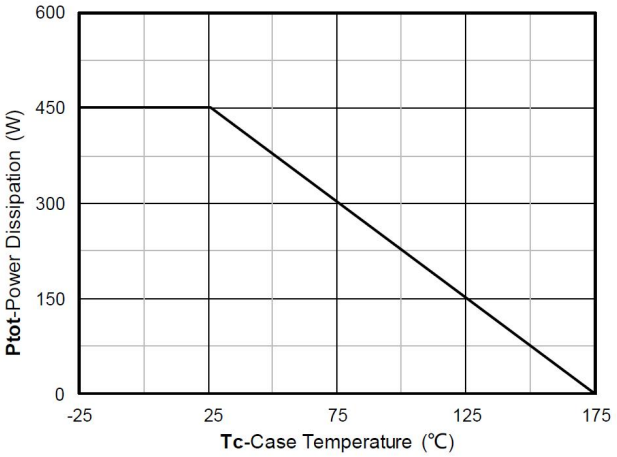

Power dissipation

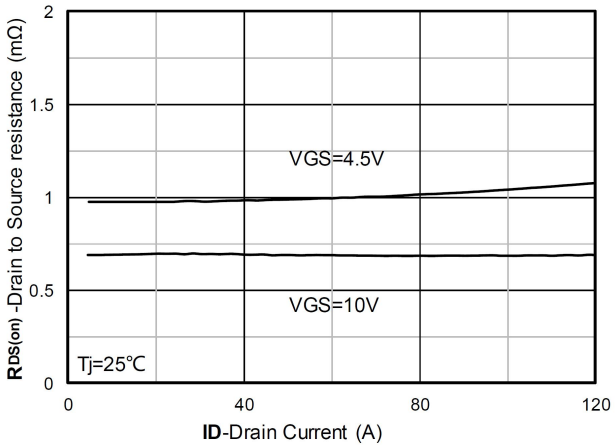

RDS(on) VS Drain Current

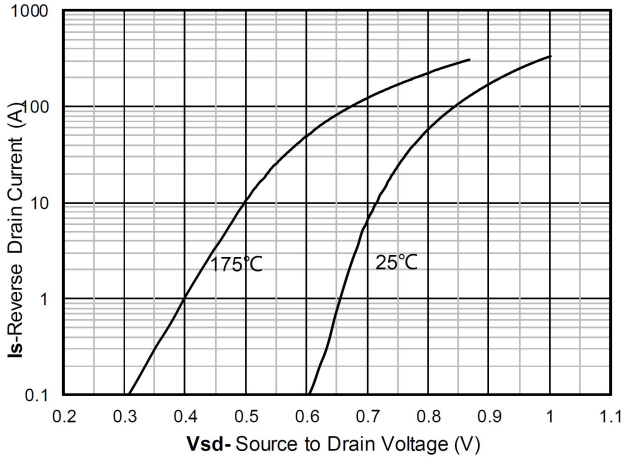

Forward characteristics of reverse diode

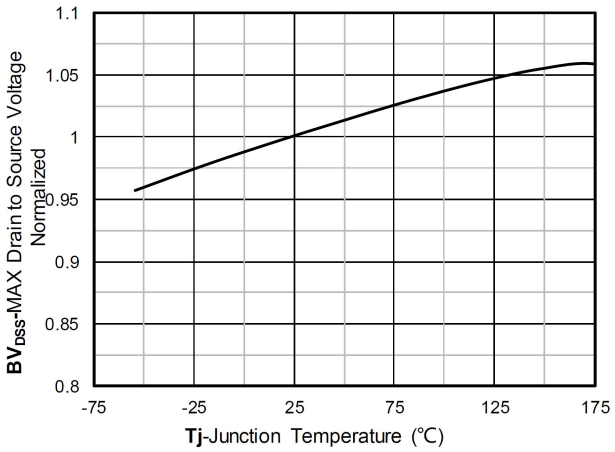

Normalized breakdown voltage

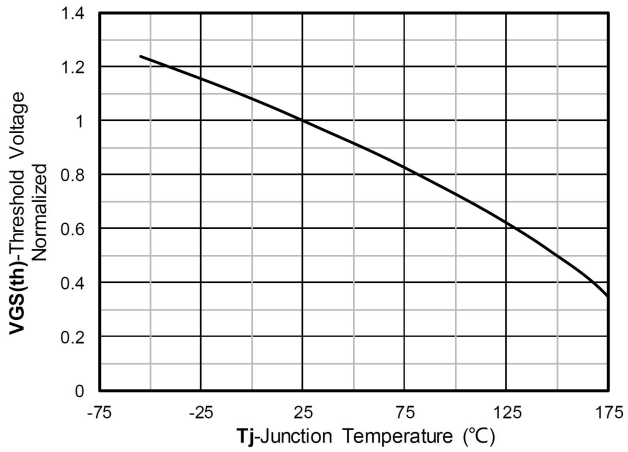

Normalized Threshold voltage

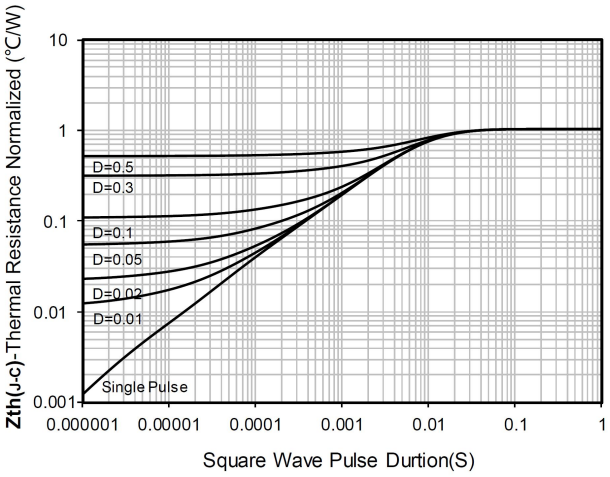

Maximum Transient Thermal Impedance

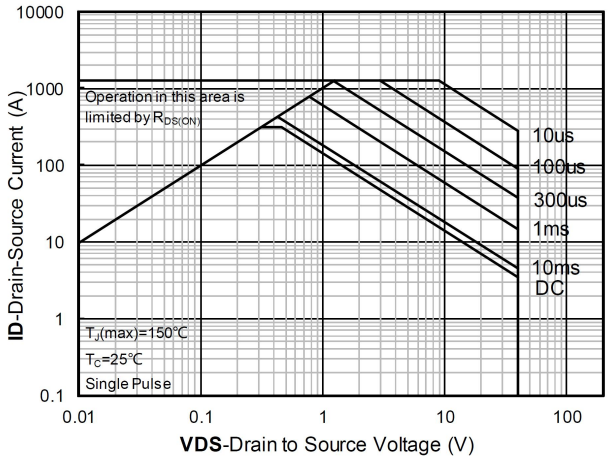

Safe Operation Area

Test Circuit

Gate Charge

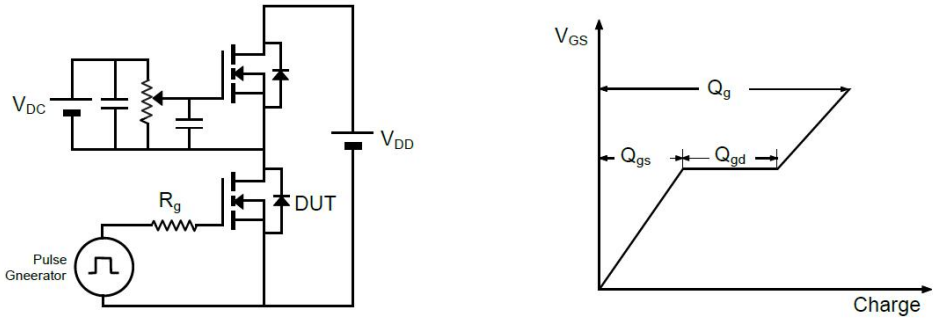

Resistive Load Switching Time

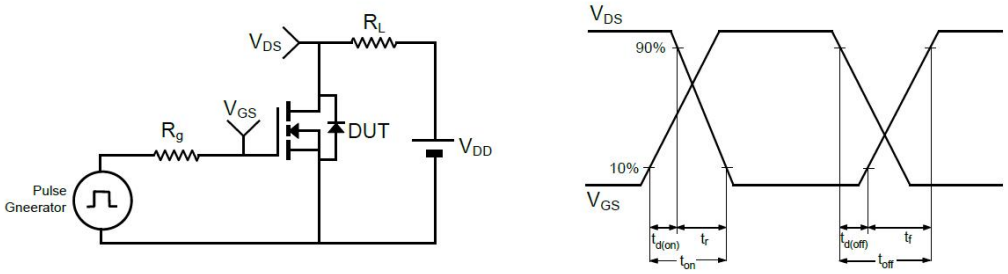

Un-clamped Inductive Load Switching

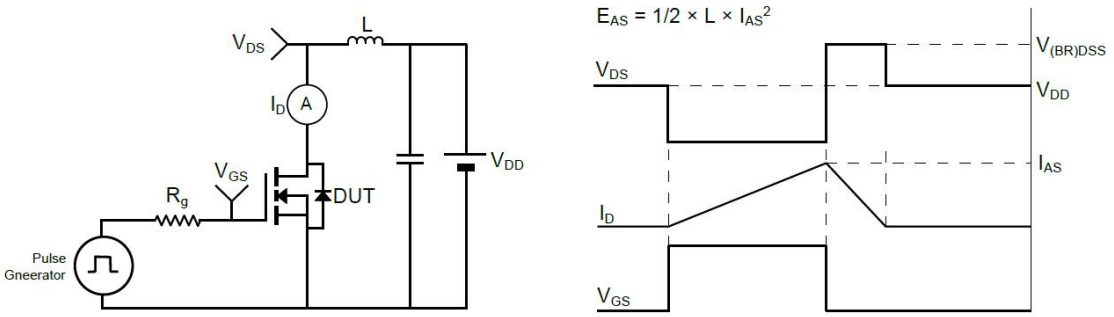

Drain-Source Body Diode Reverse Recovery

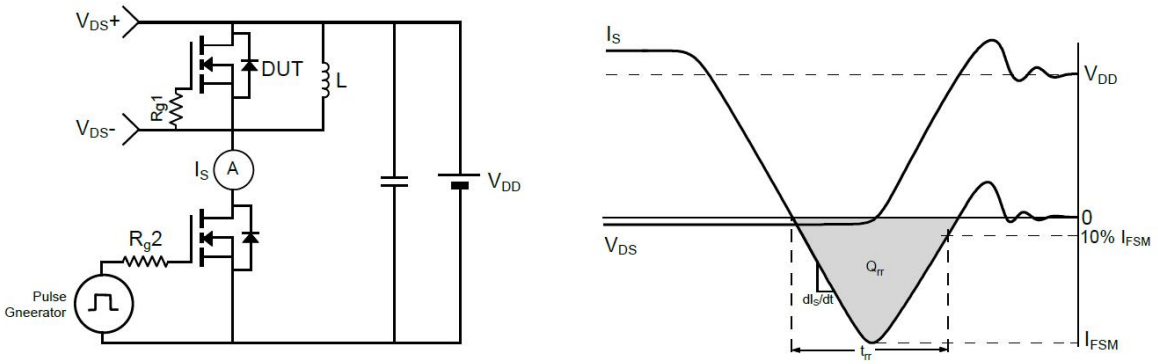

Temperature Profile for IR Reflow Soldering(Sn-Pb Eutectic&Pb-Free)

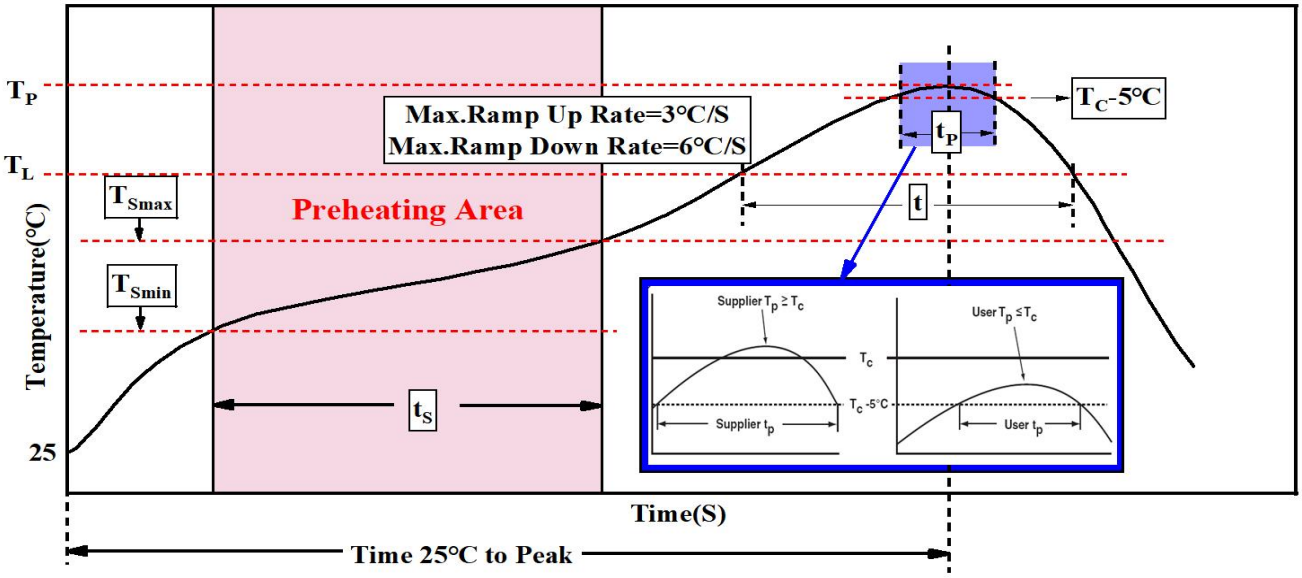

Profile Feature	Sn-Pb Eutectic Assembly	Pb-Free Assembly
Preheat & Soak Temperature min (Tsmin) Temperature max (Tsmax) Time (Tsmin to Tsmax) (ts)	 100°C 150°C 60-120 seconds	 150°C 200°C 60-120 seconds
Average ramp-up rate (Tsmax to Tp)	3 °C/second max.	3°C/second max.
Liquidous temperature (TL) Time at liquidous (tL)	183 °C 60-150 seconds	217°C 60-150 seconds
Peak package body Temperature e (Tp)*	See Classification Temp in table 1	See Classification Temp in table 2
Time (tp)** within 5°C of the specified classification temperature (Tc)	20** seconds	30** seconds
Average ramp-down rate (Tp to Tsmax)	6 °C/second max.	6 °C/second max.
Time 25°C to peak temperature	6 minutes max.	8 minutes max.
* Tolerance for peak profile Temperature (Tp) is defined as a supplier minimum and a user maximum. ** Tolerance for time at peak profile temperature (tp) is defined as a supplier minimum and a user maximum		

Table 1. SnPb Eutectic Process – Classification Temperatures (Tc)

Package Thickness	Volume mm^3 <350	Volume mm^3 ≥350
<2.5 mm	235 °C	220 °C
≥2.5 mm	220 °C	220 °C

Table 2. Pb-free Process – Classification Temperatures (Tc)

Package Thickness	Volume mm^3 <350	Volume mm^3 350-2000	Volume mm^3 >2000
<1.6 mm	260 °C	260 °C	260 °C
1.6 mm – 2.5 mm	260 °C	250 °C	245 °C
≥2.5 mm	250 °C	245 °C	245 °C

sTOLL Tape and Reel

sTOLL Embossed Carrier Tape

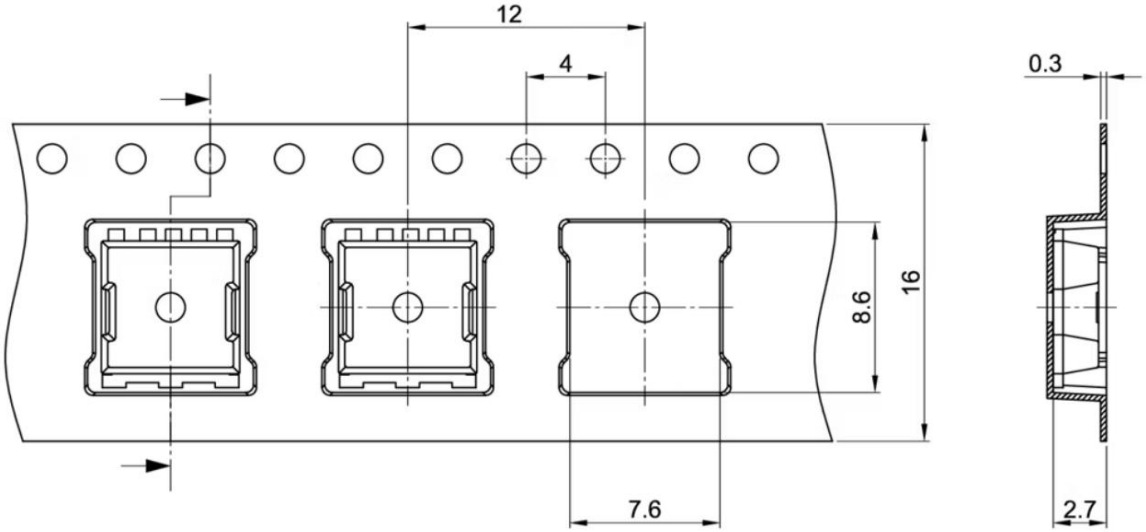

All dimensions are in units mm

sTOLL Reel

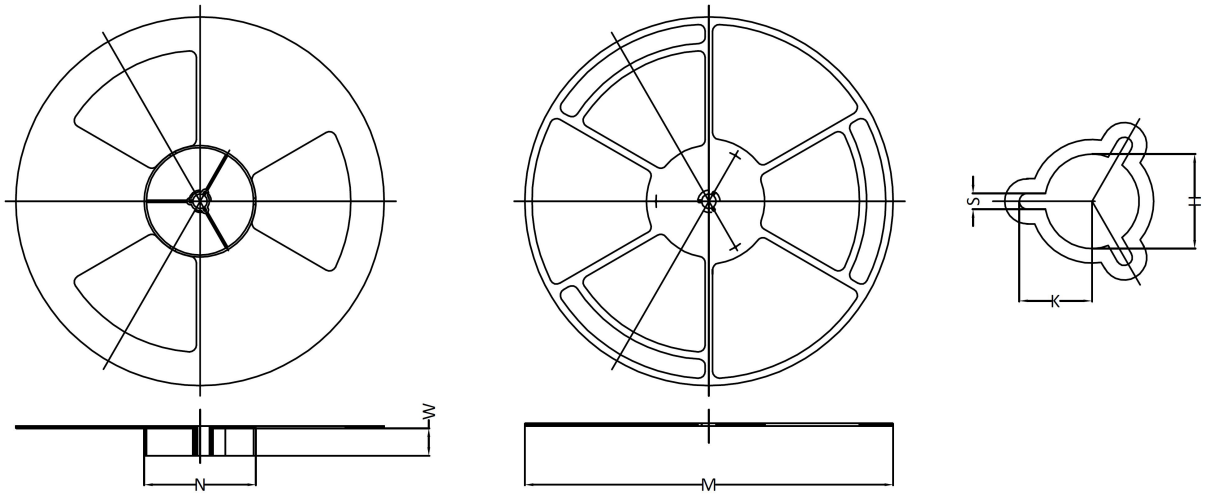

UNIT: MM

TAPE SIZE	REEL SIZE	M	N	W	H	K	S
24 mm	Ø330	Ø330.00 +0.25 -4.00	Ø100.00 ±0.2	24.4 +2.0 -0.0	Ø13.00 +0.50 -0.20	10.5 ±0.25	2.2 ±0.25

sTOLL Package Information

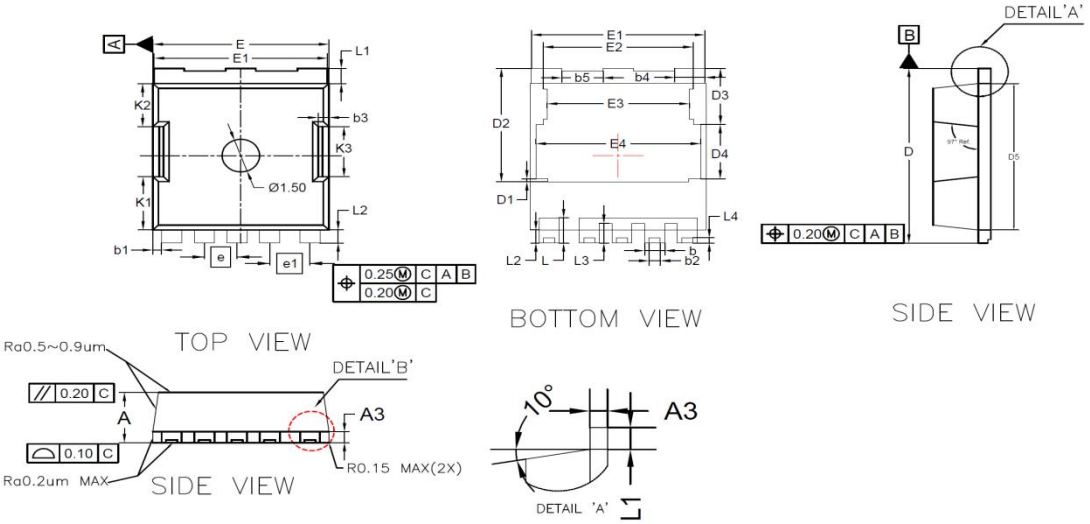

Symbol	Dimensions In Millimeters		
	MIN	NOM	MAX
A	2. 262	2.300	2.338
A3	0. 492	0. 500	0. 508
D	7.950	8. 000	8. 050
D5	6. 650	6.700	6.750
E	6.950	7. 000	7.050
e		1.30 BCS	
e1		1.60 BCS	
D1		0.130 ref	
D2	5.150	5.200	5. 250
D3	2. 520	2. 570	2. 620
D4	2.450	2.500	2.550
b	0. 750	0. 800	0. 850
b1		0.350 ref	
b2	0.350	0.450	0.550
b3	0.400	0.425	0.450
b4	1.100	1.200	1. 300
b5	1. 550	1.650	1.750
L	1.100	1.150	1.200
L1	0. 650	0.700	0.750
L2	0. 550	0. 600	0. 650
L3	0.850	0.900	0.950
L4	0. 185	0.235	0. 285
E1	6. 850	6. 900	6. 950
E2	5. 910	5. 960	6. 010
E3	5. 610	5. 660	5.710
E4	6.510	6.560	6. 610
K1		2.430 ref	
K2		1.970 ref	
K3	2.275	2.300	2.325