High Speed Fully Differential Amplifier

Features

- Fully Differential Architecture
- Bandwidth: 145MHz
- Slew Rate: 450V/μs
- Operation Supply Voltage:
  Single: +2.5 V to +5.5 V
  Dual: ±1.25 V to ±2.75 V
- Quiescent Current: 4.5mA
- Power-down Current: 1.5μA
- Negative Rail Input
- Rail-to-Rail Output Swing (RRO)
- Low Input Offset Current
- Output Common-Mode Control
- Extended Temperature Ranges
  From -40°C to +125°C
- Green Packaging: SOP-8/MSOP-8

Applications

- Differential ADC Drivers
- Differential Line Drivers
- Differential Signal Conditioning
- Single-ended to Differential Converters
- High Performance Differential Audio

General Description

The COS4521 is a broadband fully differential amplifier with rail-to-rail output and an input common-mode range that includes the negative rail.

COS4521 has a gain-bandwidth produce of 145MHz. It can be configured to convert a single-ended input signal to a differential output signal. The gain of the amplifier is set by two pairs of matched resistors. It eliminates the need for a BALUN typically required by high speed ADCs, achieving outstanding dc and low frequency performance. COS4521 is suitable for use not only as an ADC driver but also in the signal chain, to convert a precision sensor signal to a balanced (differential) signal for processing in noisy industrial environments.

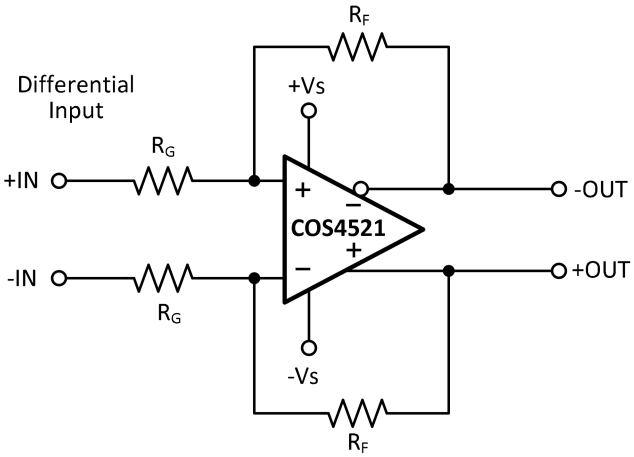

Typical Application Circuit

Rev1.0

Copyright@2018 Cosine Nanoelectronics Inc. All rights reserved
The information provided here is believed to be accurate and reliable. Cosine Nanoelectronics assumes no reliability for inaccuracies and omissions. Specifications described and contained here are subjected to change without notice on the purpose of improving the design and performance. All of this information described herein should not be implied or granted for any third party.

1. Pin Configuration and Functions

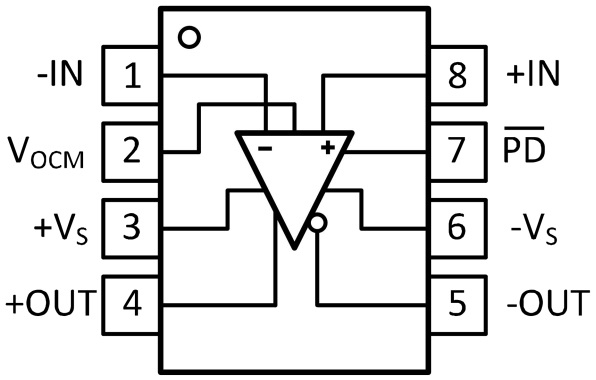

Pin Functions

PIN No.	PIN Name	Description
1	-IN	Inverting amplifier input
2	V_{OCM}	Common-mode voltage input，set by an external control source
3	+Vs	Amplifier positive power supply input
4	+OUT	Noninverting amplifier output
5	-OUT	Inverting amplifier output
6	-Vs	Amplifier negative power supply input
7	$\overline{PD}$	Power down Control: $\overline{PD}$=logic low=power off mode $\overline{PD}$=logic high=power on mode (default)
8	+IN	Noninverting amplifier input

2. Product Specification

2.1 Absolute Maximum Ratings (1)

Parameter	Rating	Units
Power Supply: +Vs to -Vs	5.5	V
Input / Output Voltage, Common-mode Voltage	-Vs -0.5V to +Vs + 0.5V	V
Input Voltage, Differential	±Vs	V
Input Current (2)	±10	mA
Output Current	±100	mA
Storage Temperature Range	-65 to 150	°C
Maximum Junction Temperature	150	°C
ESD Susceptibility, HBM	±2	kV

(1) Stresses exceeding the absolute maximum ratings may damage the device. The device may not function or be operable above the recommended operating conditions and stressing the parts to these levels is not recommended. In addition, extended exposure to stresses above the recommended operating conditions may affect device reliability. The absolute maximum ratings are stress ratings only.

(2) Input terminals are diode-clamped to the power-supply rails. Input signals that can swing more than 0.5V beyond the supply rails should be current-limited to 10mA or less.

2.2 Thermal Data

Parameter	Rating	Unit
Package Thermal Resistance, $R_{\theta JA}$ (Juntion-to-Ambient)	155 (SOP8) 206 (MSOP8)	°C/W

2.3 Recommended Operating Conditions

Parameter		Rating	Unit
DC Supply Voltage	Dual Supply	±1.35 ~ ±2.75	V
	Single Supply	2.7 ~ 5.5	V
Operating Ambient Temperature		-40 to +85	°C

2.4 Electrical Characteristics

(T_A=+25°C, +V_S=5V, -V_S=0V, V_{OCM}=V_S/2, R_F=1 kΩ, R_L=1 kΩ differential, G=1V/V, single-ended input, differential output, input and output referenced to mid-supply, unless otherwise noted)

Parameter	Symbol	Conditions	Min	Typ	Max	Unit
Input Characteristics						
Input Bias Current	I_B	T_A = 25°C		±0.1	±0.35	μA
		−40°C < T_A < +125°C			±0.5	
Input Offset Current	I_{OS}	T_A = 25°C		±0.1	±0.35	μA
		−40°C < T_A < +125°C			±0.5	
Input Offset Voltage	V_{OS}	T_A=+25°C		±0.5	±5	mV
		−40°C < T_A < +125°C		±0.7	±7	mV
Input Offset Voltage Drift	$\Delta V_{OS}/\Delta T$	−40°C < T_A < +125°C		±2		μV/°C
Common-Mode Voltage Range	V_{CM}		-V_S -0.1		+V_S -1.5	V
Common-Mode Rejection Ratio	CMRR		70	90		dB
Open-Loop Voltage Gain	A_{OL}		95	110		dB

Output Characteristics						
Output Voltage Low from Rail		T_A=+25°C		0.15	0.2	V
		T_A=-40°C to +85°C			0.25	V
Output Voltage High from Rail		T_A=+25°C	4.8	4.85		V
		T_A=-40°C to +85°C	4.75			V
Output Current Drive (for linear operation)		R_L=50Ω		±40		mA
Power Supply						
Operating Voltage Range	Vs		2.5		5.5	V
Quiescent Operating Current	I_Q			4.5		mA
Power-down Current	I_{PD}			2		μA
Power Supply Rejection Ratio	PSRR		80	100		dB
Dynamic Performance						
Gain Bandwidth Product	GBWP	G=+1		145		MHz
Bandwidth for 0.1-dB Flatness		G=+1		30		MHz
Rising Slew Rate (differential)	SR_U	G = +1 , 2V Output Step R_L=200Ω		450		V/μs
Falling Slew Rate (differential)	SR_F			450		V/μs
Rise Time	t_R			4		ns
Fall Time	t_F			4		ns
Settling Time to 1%				15		ns
V_{OCM} Voltage Control						
Small Signal Bandwidth				20		MHz
Slew Rate				50		V/μs
Gain				1		V/V
Common-mode Offset Voltage		Measured at V_{OUT} with V_{OCM} input driven, V_{OCM} = 2.5 V ±1 V		±10	±50	mV
Input Bias current					±25	μA
V_{OCM} Voltage Range			0.8		4.2	V

Power Down Pin						
Enable Voltage Threshold				2.1	2.5	V
Disable Voltage Threshold			0.7	2.0		V
Disable Pin Bias Current					1	μA
Turn-on Time Delay		Time to V_{OUT} = 90% of final value, V_{IN}= 2 V, R_L = 200 Ω		4		μs
Turn-off Time Delay		Time to V_{OUT} = 10% of final value, V_{IN}= 2 V, R_L = 200 Ω		4		μs
Noise Performance						
Voltage Noise Density	e_n	f=10kHz		20		nV/ √Hz

3.0 Application Notes

Overview

The COS4521 is a fully differential operational amplifier optimized to convert a differential or single-ended signal to a low impedance, balanced differential output suitable for driving high performance, low power differential successive approximation register (SAR) ADCs. The balanced differential nature of the amplifier also provides even-order harmonic distortion cancellation, and low susceptibility to common mode noise (like power supply noise).

The outputs of the COS4521 are capable of swinging rail to-rail and can source or sink up to 40mA of current. The COS4521 is optimized for high bandwidth and low power applications. Load capacitance above 10pF to ground or 5pF differentially should be decoupled with 10Ω to 100Ω of series resistance from each output to prevent oscillation or ringing. Feedback should be taken directly from the amplifier output. Higher voltage gain configurations tend to have better capacitive drive capability than lower gain configurations due to lower closed-loop bandwidth.

Typical Application Circuits

Differential Input to Differential Output Amplifier

COS4521 is a fully-differential operational amplifiers that can be used to amplify differential input signals to differential output signals. Figure 1 shows a basic block diagram of the circuit (V_{OCM} and PD inputs not shown). The gain of the circuit is set by R_F divided by R_G.

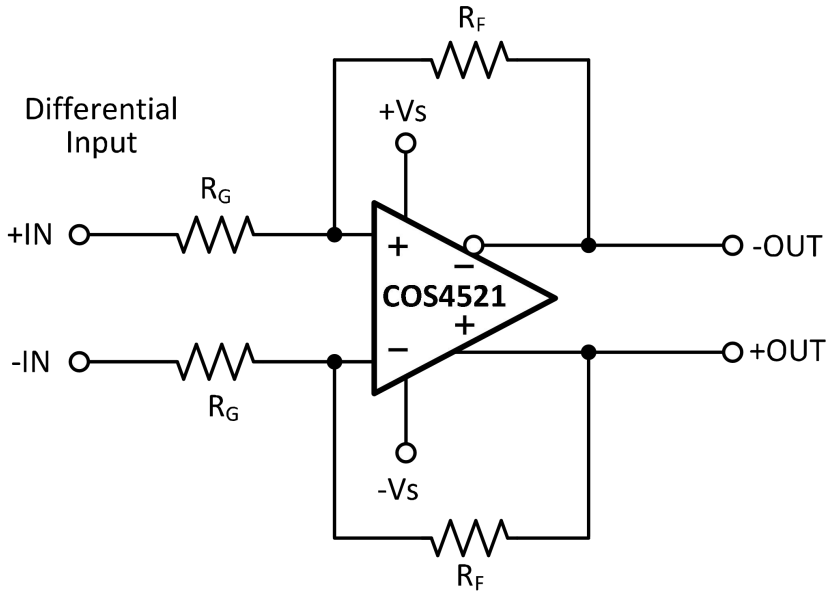

Figure 1. Differential Input to Differential Output Amplifier

Single-Ended Input to Differential Output Amplifier

COS4521 can also amplify and convert single-ended input signals to differential output signals. Figure 2 illustrates a basic block diagram of the circuit (V_{OCM} and PD inputs not shown). The gain of the circuit is again set by R_F divided by R_G.

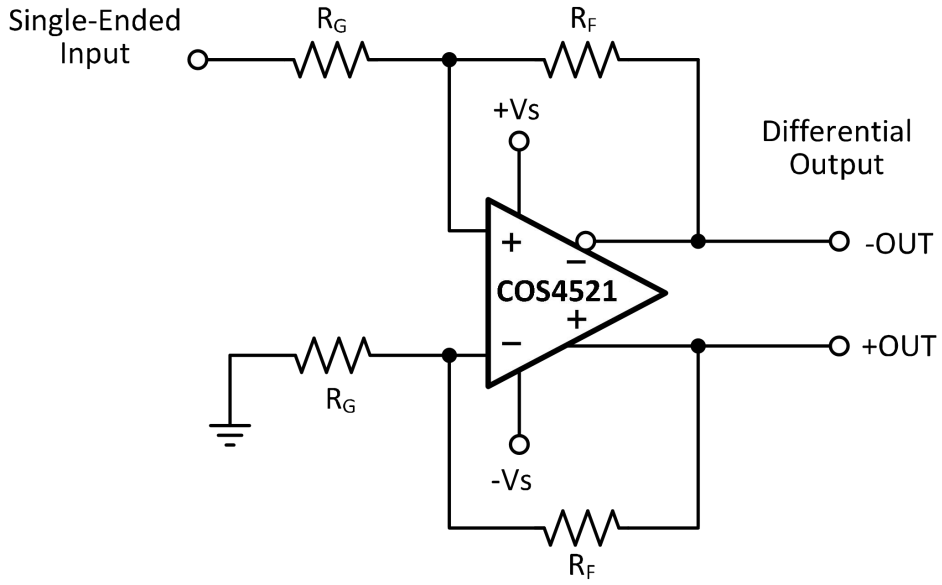

Figure 2. Single-Ended Input to Differential Output Amplifier

AC-coupled, Single-Ended Input to Differential Output Amplifier

If the signal path is ac-coupled, the dc biasing for the COS4521 becomes a relatively simple task. Going to the device input pins side, because both the source and balancing resistor on the non-signal input side are dc-blocked (see Figure 3), no common-mode current flows from the output common-mode voltage, thus setting the input common-mode equal to the output common-mode voltage.

The best linearity is achieved by operating V_{OCM} at midsupply. The V_{OCM} voltage must be within the linear range for the common-mode loop, as specified in the headroom specifications (approximately 0.91 V greater than the negative supply and 1.1 V less than the positive supply). To limit noise, place a 0.1-µF decoupling capacitor on the V_{OCM} pin to ground.

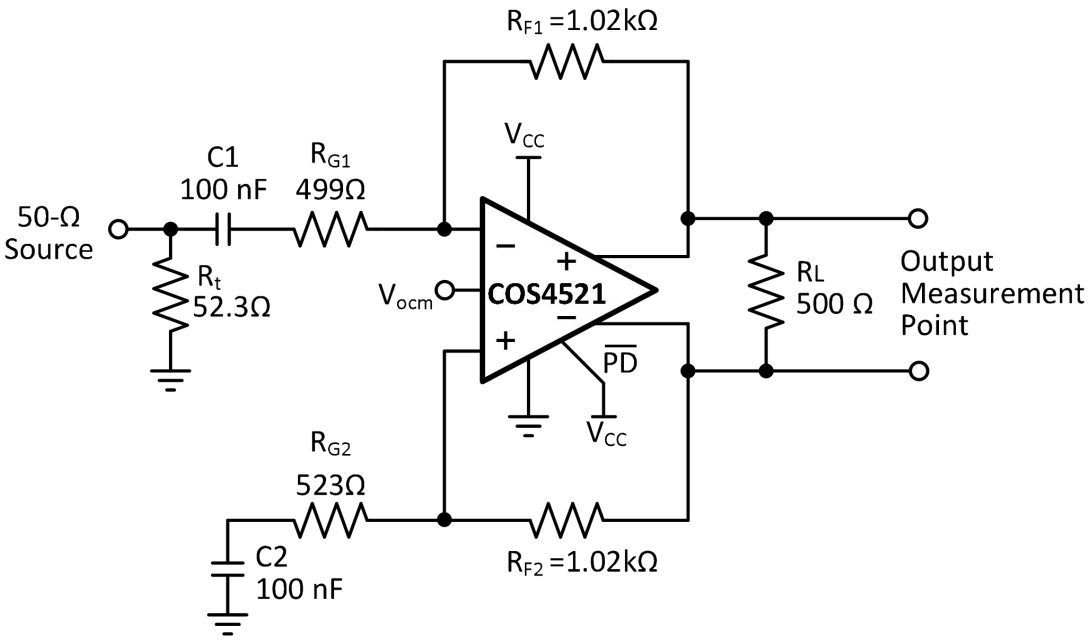

Figure 3. AC-coupled, Single-ended Source to a Differential Gain of 2 V/V Test Circuit

DC-coupled, Single-Ended Input to Differential Output Amplifier

When the source is dc-coupled into the COS4521, both sides of the input circuit must be dc-coupled to retain differential balance (see Figure 4). Normally, the non-signal input side has an R_G element biased to whatever the source midrange is expected to be. Providing this midscale reference gives a balanced differential swing around V_{OCM} at the outputs. The output considerations remain the same as for the ac-coupled design.

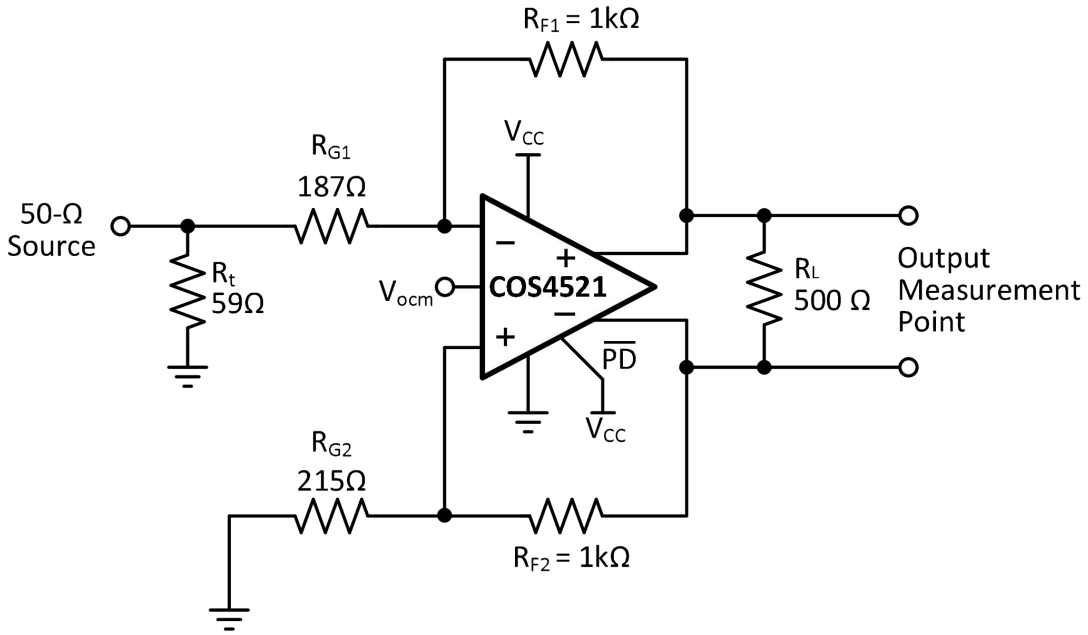

Figure 4. DC-Coupled Single-Supply With Single-Ended Inputs

ADC Driver

The COS4521 provides excellent performance when driving ΔΣ and successive approximation register (SAR) ADCs in audio and industrial applications using a single 3-V to 5-V power supply. The circuit shown in Figure 5 can be used for testing implementation.

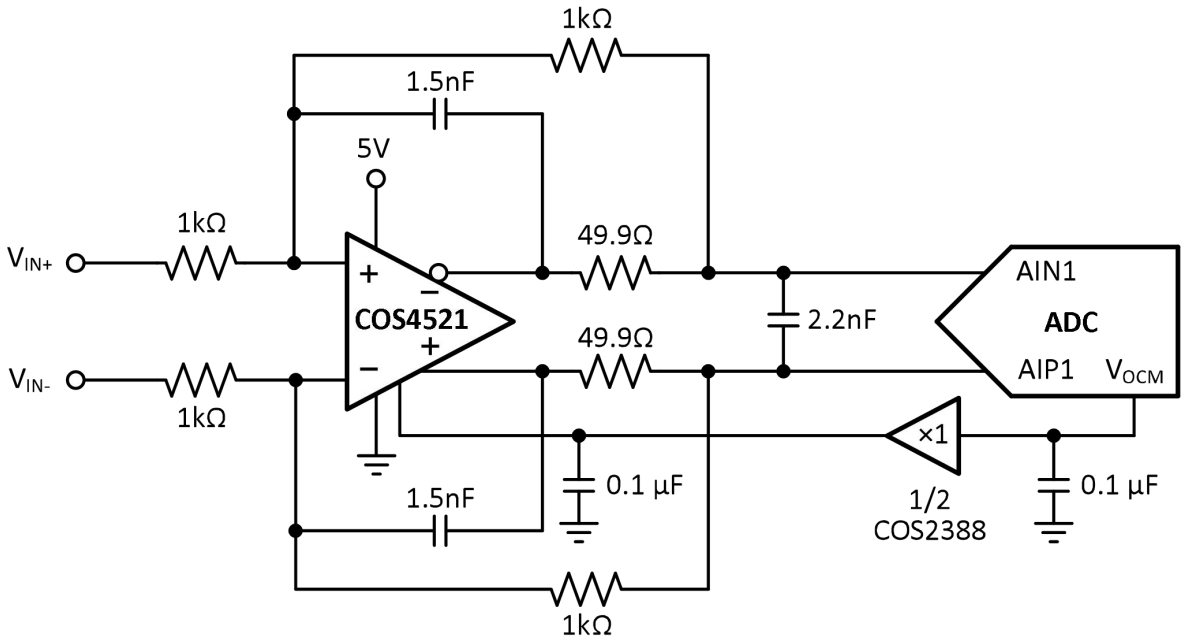

Figure 5. COS4521 as ADC Driver

Driving Capacitive Loads

Driving large capacitive loads can cause stability problems for voltage feedback op amps. As the load capacitance increases, the feedback loop's phase margin decreases, and the closed loop bandwidth is reduced. This produces gain peaking in the frequency response, with overshoot and ringing in the step response.

The COS4521 is designed for a nominal capacitive load of 10pF on each output to ground. When driving capacitive loads greater than 10pF, it is recommended to use small resistors (R_{ISO}) in series with the output, placed as close to the device as possible. The small series resistor (R_{ISO}) at the output improves the feedback loop's phase margin (stability) by making the output load resistive at higher frequencies. It does not, however, improve the bandwidth.

To select R_{ISO}, check the frequency response peaking (or step response overshoot) on the bench. If the response is reasonable, you do not need R_{ISO}. Otherwise, start R_{ISO} at 25Ω and modify its value until the response is reasonable.

Power-Supply Bypassing and Layout

The COS4521 operates from a single +2.5V to +5.5V supply or dual ±1.25V to ±2.75V supplies. For single-supply operation, bypass the power supply +Vs with a 0.1μF ceramic capacitor which should be placed close to the +Vs pin. For dual-supply operation, both the +Vs and the -Vs supplies should be bypassed to ground with separate 0.1μF ceramic capacitors. 2.2μF tantalum capacitors can be added for better performance.

The differential signal routing over any appreciable distance must use microstrip layout techniques with matched impedance traces. The input summing junctions are very sensitive to parasitic capacitance. Any R_G elements must connect into the summing junction with minimal trace length to the device pin side of the resistor. The other side of the R_G elements can have more trace length if needed to the source or to GND.

High speed currents in an inductive ground return create an unwanted voltage noise. Broad ground plane areas will reduce the parasitic inductance. Thus a ground plane layer is important for high speed circuit design.

Layout Example

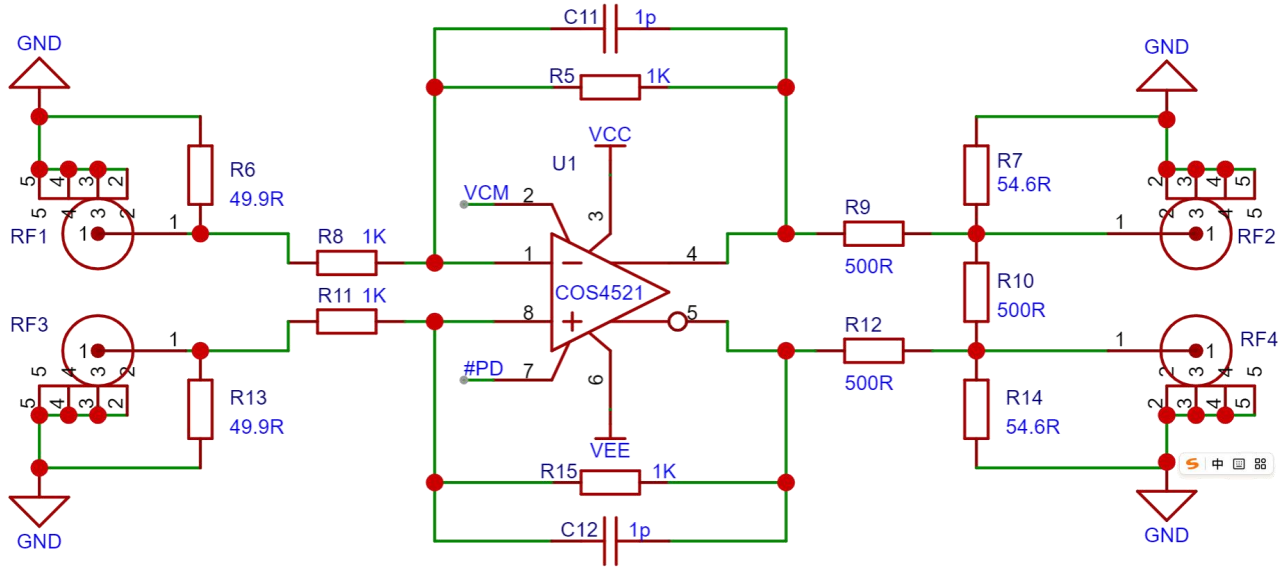

Figure 6. COS4521 Evaluation Board Schematic

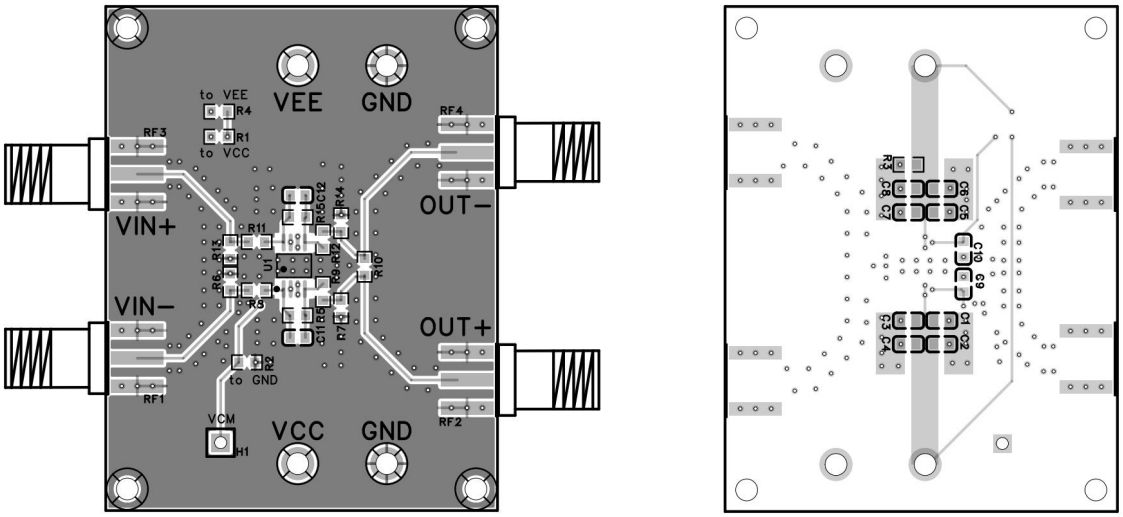

(a) (b)

Figure 7. COS4521 Evaluation Board (a) Top Layer, (b) Bottom Layer

4. Package Information

4.1 SOP-8 (Package Outline Dimensions)

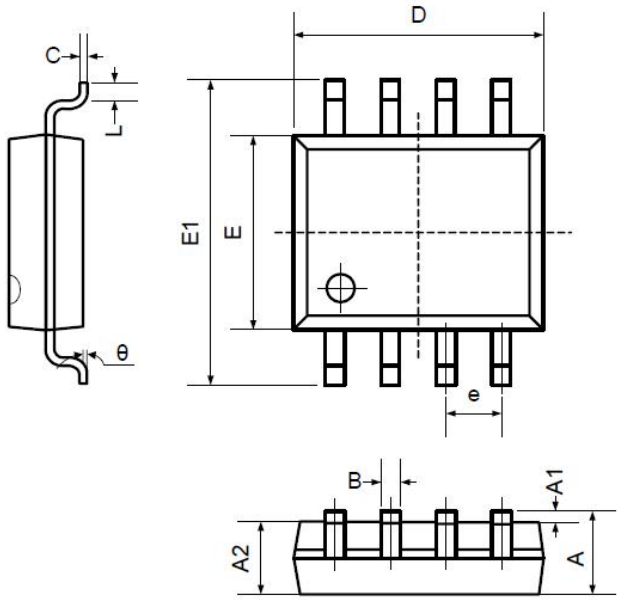

Symbol	Dimensions In Millimeters		Dimensions In Inches	
	Min	Max	Min	Max
A	1.350	1.750	0.053	0.069
A1	0.100	0.250	0.004	0.010
A2	1.350	1.550	0.053	0.061
B	0.330	0.510	0.013	0.020
C	0.190	0.250	0.007	0.010
D	4.780	5.000	0.188	0.197
E	3.800	4.000	0.150	0.157
E1	5.800	6.300	0.228	0.248
e	1.270TYP		0.050TYP	
L	0.400	1.270	0.016	0.050
θ	0°	8°	0°	8°

4.2 MSOP-8 (Package Outline Dimensions)

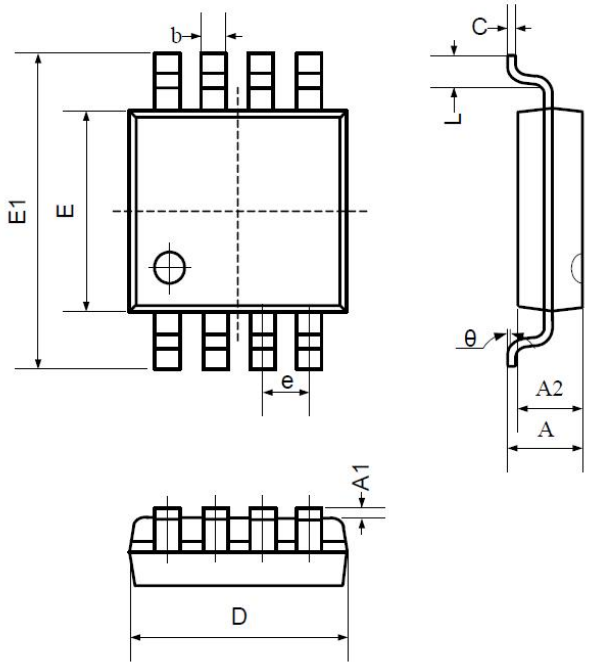

Symbol	Dimensions In Millimeters		Dimensions In Inches	
	Min	Max	Min	Max
A	0.800	1.200	0.031	0.047
A1	0.000	0.200	0.000	0.008
A2	0.760	0.970	0.030	0.038
b	0.30 TYP		0.012 TYP	
c	0.15 TYP		0.006 TYP	
D	2.900	3.100	0.114	0.122
e	0.65 TYP		0.026 TYP	
E	2.900	3.100	0.114	0.122
E1	4.700	5.100	0.185	0.201
L	0.410	0.650	0.016	0.026
θ	0°	6°	0°	6°

5. Ordering Information

Channel	Model	Order Number	Package	Package Option	Marking Information
1	COS4521	COS4521SR	SOP-8	Tape and Reel, 4000	COS4521
		COS4521MR	MSOP-8	Tape and Reel, 3000	COS4521

6. Related Parts

Part Number	Description
COS6042	24kHz, 0.5μA, Nano-Power Op Amps, 1.4V to 5.5V Supply
COS8042	160MHz, 5.5mA, High Speed Op Amps, 3V to 12V Supply
COS2172	10MHz, 1.2mA, RRIO Op Amps, 4.5 to 40V Supply
COS2333	350kHz, 18μA, Precision Op Amps, 1.8 to 5.5V Supply, Zero Drift, Vos<10μV
COS8552	1.5MHz, 55μA, Precision Op Amps, 1.8 to 5.5V Supply, Zero Drift, Vos<10μV
COS2388	9MHz, 570μA, Precision Op Amps, 1.8 to 5.5V Supply, Zero Drift, Vos<10μV
COS2227	10MHz, 1.3mA, Precision Op Amps, 4.5 to 36V Supply, Vos<50μV
COS2182	8.5MHz, 580μA, RRIO Precision Op Amps, 4.5 to 36V Supply, Vos<50μV
COS620	1.5MHz, 1.3mA, Instrumentation Amps, 4.5 to 36V Supply, Vos<50μV
COSINA333	150kHz, 65μA, Instrumentation Amps, 1.8 to 5.5V Supply, Vos<25μV