深圳市良胜电子有限公司 SHENZHEN LANSON ELECTRONICS CO., LTD.
惠州市良胜电子有限公司 HUIZHOU LANSON ELECTRONICS CO., LTD.

地址 Address：惠州仲恺高新区沥林镇英光村惠州仲恺中集智城产业园 12 号厂房
Factory Building No.12, Zhongji Wisdom City Industrial Park, Zhongkai District, Huizhou.
电话 Tel: 0752-3339907　　传真 Fax: 0755-29929812
邮件 E-mail: lanson@lansonfuse.com　　网址 Web site: www.lansonfuse.com

规格书 Specification for Approval

产品名称 Product Name	温度保险丝 Thermal-link
文件编号 Document No.	LS/C-005-42
类别 Classification	☐样品阶段Sample ■正式承认Qualified ☐工程变更Changed
产品编码 Product Code	TX113_TX-A34-34_引脚加长,L34/L34
型号规格 Model Detail	TX113,113℃ 15/16A 250Vac
认证 Agency Approval	UL,CUL,VDE,TUV,PSE,KC,CCC

拟制 Prepared By	审核 Reviewed By	批准 Approved By
研发部 2026-05-06 胡厚健	研发部 2026-05-06 冯光明	研发部 2026-05-06 张 毅

客户承认 Customer Approval

客户名称 Customer Name	
客户料号 Customer P/N	
结论 Conclusion	☐合格 Qualified ☐不合格 Unqualified　　原因 Cause:

经办 Prepared By	审核 Reviewed By	核准 Approved By

生效日期 Effective Date	年YY　　月MM　　日DD

1. 适用范围 Scope of application

本产品适用于电源适配器、照明灯具、电动机、家电等各种电热产品的电路中，起过温保护的作用。

This product is suitable for power adapter, lighting, motor, home appliances and other electric heating products in the circuit, play the role of over temperature protection.

2. 术语解释 Explanation of Glossary

2.1 温度保险丝 Thermal-link(TCO)：

温度保险丝也称为热熔断体，为一次性动作而不可复位的装置。

Thermal-link is also called Thermal Cutoff, functioning once only, non-resettable.

2.2 额定动作温度 Rated Function Temperature(Tf)：

在规定条件下测得的使温度保险丝导电状态发生改变的温度。额定动作温度Tf＜250℃，其动作温度必须在Tf-10℃～Tf值范围内，额定动作温度Tf≥250℃，其动作温度必须在Tf-20℃～Tf值范围内。

The temperature of the Thermal-link which cause it to change its state of conductive when measured under specified conditions, Tf＜250℃,its operating temperature must be within the range of Tf-10℃～Tf , and Tf≥250℃,its operating temperature must be within the range of Tf-20℃～Tf.

2.3 实测熔断温度 Fusing Temperature：

温度保险丝以每分钟0.5～1.0℃速率上升，检测电流小于10 mA条件下所测得的烤炉中发生动作时的温度。

It is the actual operating temperature when the Thermal-link is made to operate at the conditions that the temperature is raised at the rate of 0.5℃～1℃ per minute and the detection current less than 10 mA.

2.4 保持温度 Holding Temperature(Th)：

温度保险丝在通过额定电流时，能够连续维持168小时而承受的最高不致其导电状态发生改变的温度。

The maximum temperature at which the Thermal-link can be maintained while conducting rated current for 168 hours without functioning.

2.5 极限温度 Maximum Temperature Limit(Tm)：

温度保险丝所能处在的最高温度,在此温度下，温度保险丝的导电状态已发生改变，但其机械性能和电气特性在10分钟内不致改变。

The maximum temperature at which mechanical and electrical properties of the Thermal-link can be maintained for 10 minutes without resuming conductivity after functioning.

2.6 额定电流 Rated Current(Ir):

温度保险丝在所使用的电路中能承受的最大电流。

The maximum current that is allowed to apply to the circuit in which the Thermal-link is used.

2.7 额定电压 Rated Voltage(Ur):

温度保险丝在所使用的电路中能承受的最大电压。

The maximum voltage that is allowed to apply to the circuit in which the Thermal-link is used.

2.8 标称放电电流 Nominal Discharge Current (In):

能够承受波形为8/20μs的15个峰值电流，以测试产品承受脉冲电流的耐用性。

Being able to withstand 15 peak currents of waveform 8 / 20μs to test the product's durability of withstanding pulse current.

2.9 最大放电电流 Maximum Discharge Current(Imax):

能够承受波形8/20μs的1个峰值电流，以测试产品能够承受的最大脉冲电流。

Being able to withstand 1 peak current of waveform 8 / 20μs to test maximum pulse current that the product can withstand.

3. 尺寸及结构 Dimension and Structure

3.1 尺寸 Dimension (mm)

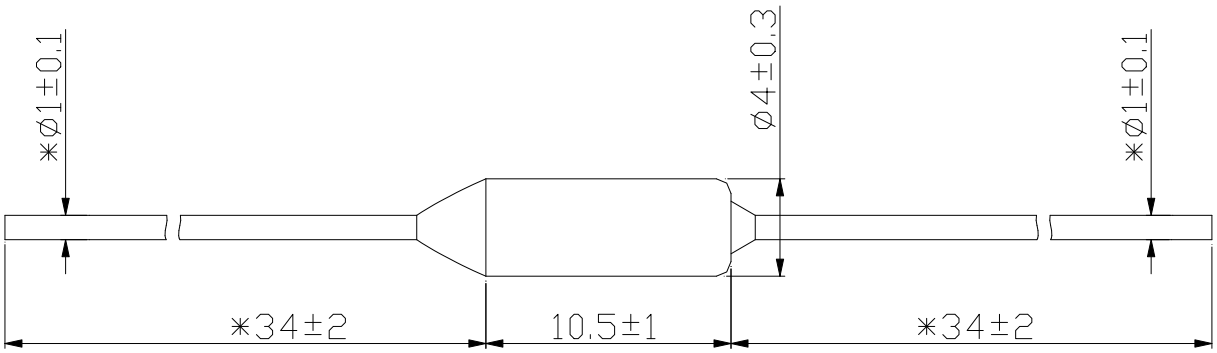

引线长度可依客户需求订制。

Length can be customized according to customer needs.

3.2 结构 Structure

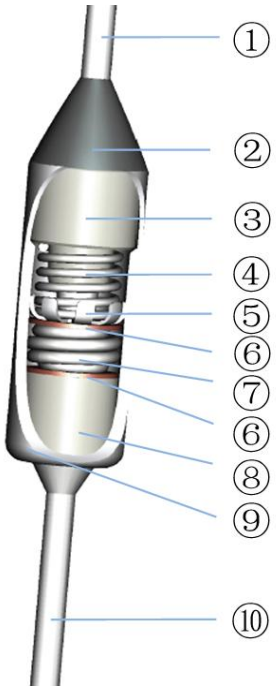

熔断前
Before Function

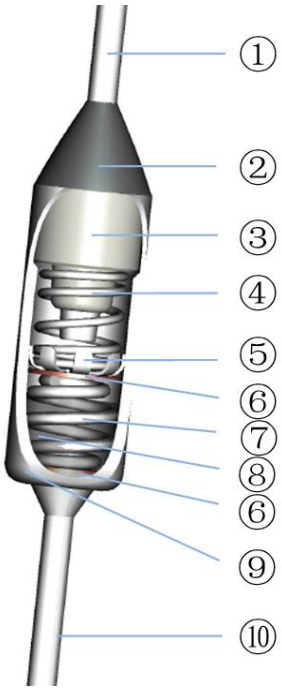

熔断后
After Function

编号 No.	零件名称 Part Name	材质 Material
①	引线 A Lead wire A	镀银铜线 Silver plated copper wire
②	密封树脂 Sealing resin	环氧树脂 Epoxy resin
③	陶瓷套 Ceramic bushing	陶瓷 Ceramic
④	弹簧 A Spring A	不锈钢 Stainless steel
⑤	星形触片 Star contact	银合金 Silver alloy
⑥	垫片 Disk	铜 Copper
⑦	弹簧 B Spring B	不锈钢 Stainless steel
⑧	感温元件 Thermal pellet	有机物 Organic compound
⑨	金属外壳 Metal case	铜镀银 Silver plated copper
⑩	引线 B Lead wire B	镀锡铜线 Tin plated copper wire

4. 规格参数表 Specification Parameters List

序号 NO.	型号 Model	额定动作温度 Tf (℃)	实测熔断温度 Fusing -Temp. (℃)	保持温度 Th (℃)	极限温度 Tm (℃)	额定电流 Ir (A)	额定电压 Ur (Vac)	安规认证 Approvals ●:已获认证 Approved ○:认证中 Pending						
								UL	CUL	VDE	TUV	PSE	KTL	CCC
1	TX73	73	69±2	43	120	15/16	250	●	●	●	●	●	●	●
2	TX77	77	74±2	48	120	15/16	250	●	●	●	●	●	●	●
3	TX84	84	82±2	54	150	15/16	250	●	●		●	●	●	●
4	TX94	94	90±2	64	150	15/16	250				●	●	●	●
5	TX99	99	96±2	69	150	15/16	250	●	●		●	●	●	●
6	TX104	104	101±2	74	150	15/16	250				●	●	●	●
7	TX113	113	110±2	81	150	15/16	250	●	●	●	●	●	●	●
8	TX121	121	118±2	87	150	15/16	250	●	●	●	●	●	●	●
9	TX133	133	128±2	100	160	15/16	250	●	●	●	●	●	●	●
10	TX144	144	141±2	114	190	15/16	250	●	●		●	●	●	●
11	TX157	157	153±2	127	190	15/16	250				●	●	●	●
12	TX167	167	164±2	135	190	15/16	250	●	●	●	●	●	●	●
13	TX172	172	169±2	140	190	15/16	250	●	●	●	●	●	●	●
14	TX184	184	181±2	154	200	15/16	250	●	●	●	●	●	●	●
15	TX192	192	189±2	162	250	15/16	250				●	●	●	●
16	TX216	216	213±2	186	250	15/16	250	●	●	●	●	●	●	●
17	TX229	229	226±2	200	380	15/16	250	●	●		●	●	●	●
18	TX240	240	237±2	200	380	15/16	250	●	●		●	●	●	●
19	TX257	257	250±5	200	380	15/16	250	●	●		●	●	●	●

5. 相关标准及认证 Relevant Standards and Certification

序号 NO.	认证机构 Certificate authority	认证标志 Certification mark	安规标准 Safety standards	证书编号 Certification No.
1	UL		UL60691	E317276
2	CUL		CAN-CSA-E60691	E317276
3	VDE		IEC60691	40053003
4	TUV		EN60691	R50546219
5	PSE		J60691	JET5359-32001-2010B(73℃,77℃) JET5359-32001-2024B(84℃,94℃,99℃) JET5359-32001-2011B(104℃,113℃) JET5359-32001-2012B(121℃,133℃) JET5359-32001-2025B（144℃,157℃） JET5359-32001-2013B(167℃,172℃) JET5359-32001-2014B(184℃,192℃) JET5359-32001-2015B(216℃) JET5359-32001-2026B（229℃,240℃） JET5359-32001-2027B（257℃）
6	KTL		K60691	SU05026-23012A（73℃,77℃,84℃,94℃,99℃） SU05026-23013A（104℃,113℃） SU05026-23014A（121℃,133℃,144℃,157℃） SU05026-23015A（167℃,172℃,184℃,192℃） SU05026-23016A（216℃,229℃,240℃,257℃）
7	CCC		GB/T9816	2020000205000014

6. 检验方法及标准 Inspection Methods and Standards

<table>
<tr><th>序号
No.</th><th>检验项目
Test items</th><th>参考标准
Reference Standards</th><th>检验工具
Inspection tools</th><th>检验要求
Inspection Requirement</th></tr>
<tr><td>1</td><td>外观
Appearance</td><td>企业标准
Enterprise Standard</td><td>目视
Visual</td><td>标志应清晰且容易辨识，产品外观不应有明显的污点、锈迹或裂纹。
Marking shall be easily legible. There shall not be any remarkable stain, rust or crack on the appearances.</td></tr>
<tr><td>2</td><td>尺寸
Dimension</td><td>企业标准
Enterprise Standard</td><td>游标卡尺
Caliper</td><td>尺寸需符合要求。
The dimensions shall meet the requirements.</td></tr>
<tr><td>3</td><td>导通
Electric conduction</td><td>企业标准
Enterprise Standard</td><td>电阻测试仪
Resistance tester</td><td>产品必须为导通状态，阻值需符合要求。
The Thermal-link must be conductive and the resistance value must meet the requirements.</td></tr>
<tr><td>4</td><td>拉力测试
Tensile test</td><td>IEC60691
UL60691
GB/T9816</td><td>推拉力测试仪
Push pull Tester</td><td>在任何方便且不会损坏保险丝的方式下固定好样品，在每只引脚距离本体2mm处施加如下表规定的拉力1 min，不能有损伤或脱落。
The Thermal-link shall be supported in any convenient manner in order not to damage it and a tensile force as specified in the table below shall be applied to each lead for 1 min, without damage or falling off.
<table>
<tr><th>引脚端子截面积
Nominal cross-sectional area of the lead
A
（mm²）</th><th>拉力
Tensile force
（N）</th><th>推力
Thrust force
（N）</th></tr>
<tr><td>A≤0.05</td><td>1</td><td>0.25</td></tr>
<tr><td>0.05＜A≤1.2</td><td>20×（A）</td><td>5×（A）</td></tr>
<tr><td>A＞1.2</td><td>40</td><td>8</td></tr>
</table>
不同直径引脚端子的拉力和推力计算数值如下表：
The calculation values of tension and thrust for different diameter pin terminals are shown in the table below:
<table>
<tr><th>引脚端子直径
Diameter of the lead
（mm）</th><th>引脚端子截面积
Nominal cross-sectional area of the lead
A
（mm²）</th><th>拉力
Tensile force
（N）</th><th>推力
Thrust force
（N）</th></tr>
<tr><td>Φ0.54</td><td>≈0.229</td><td>≈4.58</td><td>≈1.15</td></tr>
<tr><td>Φ0.7</td><td>≈0.385</td><td>≈7.70</td><td>≈1.93</td></tr>
<tr><td>Φ1</td><td>≈0.785</td><td>≈15.70</td><td>≈3.93</td></tr>
<tr><td>Φ1.7</td><td>≈2.269</td><td>40</td><td>8</td></tr>
<tr><td>Φ2.2</td><td>≈3.800</td><td>40</td><td>8</td></tr>
</table></td></tr>
</table>

序号 No.	检验项目 Test items	参考标准 Reference Standards	检验工具 Inspection tools	检验要求 Inspection Requirement
5	推力测试 Thrust test	IEC60691 UL60691 GB/T9816	推拉力测试仪 Push pull Tester	在任何方便且不会损坏保险丝的方式下固定好样品，在每只引脚距离本体2mm处施加如上表规定的推力1 min，不能有损伤或脱落。 The Thermal-link shall be supported using any convenient means such that it is not damaged and a thrust fore as specified in the table above shall be applied to each lead for 1 min at a distance of 2 mm from the Thermal-link, without damage or falling off.
6	扭转力测试 Bending /Twist test	IEC60691 UL60691 GB/T9816	手工 Manual	温度保险丝应该有足够的刚性而不至于损坏。在距离温度保险丝本体10mm处，每只引脚应被弯折90°，再将引脚扭曲180°，如下图所示。引脚不能有断裂或松动。 The Thermal-link shall be rigidly supported such that it is not damaged. Each lead shall be bent through 90° at a location 10 mm from the body of the Thermal-link and then twisted through 180° as shown in figure below. it shall be no fracture or loosen. 操作示例如下图： The operation example is shown in the following figure: 第一步：弯折 Step 1： Bend 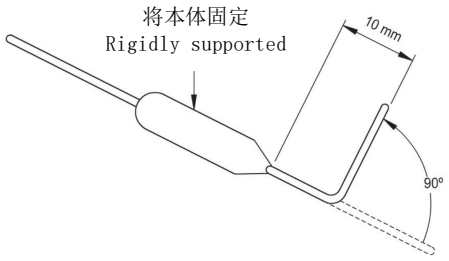 第二步：扭转 Step 1：Twist 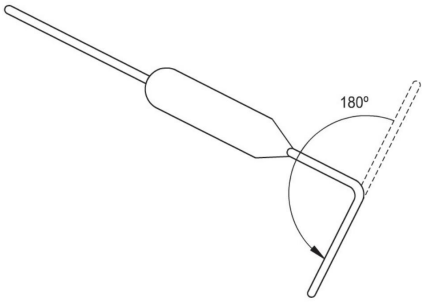

序号 No.	检验项目 Test items	参考标准 Reference Standards	检验工具 Inspection tools	检验要求 Inspection Requirement
7	额定动作温度(Tf) Rated function temperature	IEC60691 UL60691 GB/T9816	动作温度测试仪 Function temperature tester	依照IEC60691 & UL60691标准的检测方法,熔断温度需符合：额定动作温度Tf＜250℃，其动作温度必须在Tf-10℃～Tf值范围内，额定动作温度Tf≥250℃，其动作温度必须在Tf-20℃～Tf值范围内。 According to the testing method of IEC60691 and UL60691, the fusing temperature should be required by the standard: Tf＜250℃, its operating temperature must be within the range of Tf-10℃～Tf, and Tf≥250℃, its operating temperature must be within the range of Tf-20℃～Tf.
8	电气强度 Dielectric strength	IEC60691 UL60691 GB/T9816	耐压测试仪 Voltage withstand tester	动作后，两引脚间： 测试电压为2×Ur(Vac)，时间1分钟,不能被击穿。 After action, between the two pins: The test voltage is 2×Ur(Vac), withstanding for 1 minute, should not be broken down. 引脚与绝缘外壳间(如果适合)： 测试电压为2×Ur+1000(Vac)，承受1分钟，不能被击穿。 Between pin and insulating case(If applicable): The test voltage is 2×Ur+1000(Vac), withstanding for 1 minute, should not be broken down.
9	绝缘电阻 Insulation resistance	IEC60691 UL60691 GB/T9816	绝缘电阻测试仪 Insulation resistance meter	动作后，两引脚间： 测试电压为2×Ur (Vdc)，绝缘电阻≧0.2 MΩ。 After action, between the two pins: The test voltage is 2×Ur(Vdc), insulation resistance is at least 0.2 MΩ. 引脚与绝缘外壳间(如果适合)： 测试电压为2×Ur(Vdc)，绝缘电阻≧2 MΩ。 Between pin and insulating case(If applicable): The test voltage is 2×Ur(Vdc), insulation resistance is at least 2 MΩ.

7. 产品本体标示 Marking on Products

示例 Example:

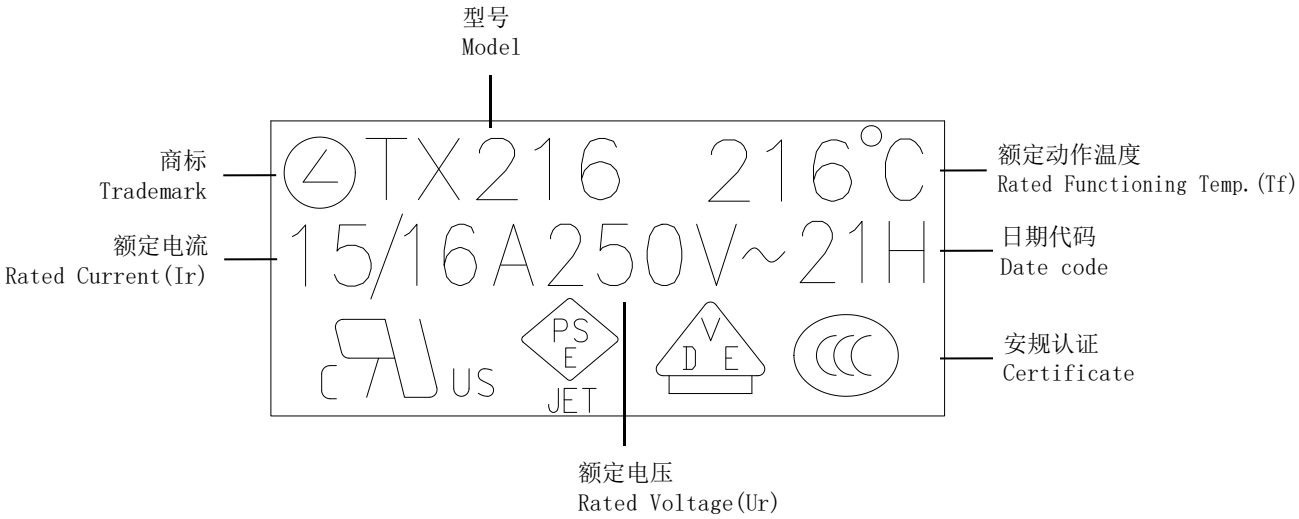

说明 Explain：

日期代码为10年时间内不重复，用两位数字表示年份，用单个字母表示月份。

年份：“20”表示2020年，“21”表示2021年，“22”表示2022年，以此类推；

月份：“A”表示1月份，“B”表示2月份，“C”表示3月份，以此类推。

The date code is not repeated within 10 years. The year is represented by two digits and the month is represented by a single letter.

Year: “20” means 2020, “21” means 2021, “22” means 2022, and so on;

Month: “A” means January, “B” means February, “C” means March, and so on.

8. 包装 Packaging

250 pcs/胶袋，6胶袋/内盒，10内盒/外箱(实际装箱依客户订单)。

250 pcs per plastic bag, 6 plastic bags per inner box, 10 inner boxes per external carton(Actual packing according to customer order).

9. 环保 Environment

产品符合RoHS环保指令及REACH法规。

The product conforms to RoHS environmental protection directive and REACH regulations.

10. 储存条件和保存有效期 Store Conditions and Effective Date

温度保险丝必须避免日光照射及环境污染，且须在温度10℃～30℃和相对湿度30%～70%的条件下保存。温度保险丝的保存期为贵公司入库后的12个月内。

Thermal-link must avoid sunlight and environmental pollution, and must be stored under the conditions of temperature 10℃～30℃ and relative humidity 30%～70%. The storage period of Thermal-link is 12 months after your storage.

11. 使用安装说明 Installation instructions

使用温度保险丝前，请认真阅读本产品使用安装说明。

Before using the Thermal-link, please read the installation instructions carefully.

11.1 安装设计 Installation Designing

11.1.1 请在额定电流（Ir）及额定电压（Ur）内使用温度保险丝，请勿将温度保险丝当作电流保险丝使用，勿将本装置用于除热切断以外的其他用途。每个型号的温度保险丝都有其特定的规格参数，包括额定动作温度（Tf）、保持温度（Th）、极限温度（Tm）、额定电流（Ir）及额定电压（Ur），详细数据请见规格参数表。

Use the Thermal-link within rated current (Ir) and rated voltage (Ur). Do not use Thermal-link as current fuse. Don't use this device for and purpose other than as a Thermal-link. Each Thermal-link has its specific specification parameters, including Rated Functioning Temperature (Tf), Holding Temperature (Th), Maximum Temperature Limit (Tm),Rated Current (Ir) and Rated Voltage (Ur), Please refer to the specification parameters list for detailed data.

11.1.2 安装温度保险丝时，要确保其安装位置的正常工作环境温度及温度保险丝带载时本体的表面温度不会超过其相应规格中的保持温度（Th）。

When installing the Thermal-link, it is necessary to ensure that the normal working environment temperature of the installation position and the surface temperature of the Thermal-link itself at working are not exceeding the holding temperature(Th) in the related specification.

11.1.3 安装后，需对最终产品进行测试，以确保潜在的异常状况不会导致温度保险丝超过其极限温度（Tm）。

After installation, the final product should be tested to ensure that potential abnormal conditions do not cause ambient temperature to exceed the Maximum Temperature Limit (Tm) of the Thermal-link.

11.1.4 温度保险丝可使用锡焊、点焊、绞接或铆接的方式进行连接于电路中。应确保引脚足够长，且其安装方式不会造成强行按压、拉伸及扭转引脚的现象。

The Thermal-link can be connected to the circuit by means of soldering, spot welding, splicing or riveting in the circuit. Ensure that the lead wire is long enough and are installed in a way that avoid actions such as press, tensile or twist.

11.1.5 请勿将温度保险丝安装在可能经常出现剧烈振动的位置。勿在水、有机溶剂液体或其他液体、以及亚硫酸气体、酸性气体或高湿度的环境中使用。

Do not install the Thermal-link in a position where severe vibration may occur frequently. Do not use the Thermal-link in water, organic solvents or other liquids, or environments containing sulfurous acid gas, acid gas, or high humidity.

11.1.6 温度保险丝是不可复位的装置。为安全起见，在更换时应使用同类别同型号的温度保险丝并且严格按照同样的方法正确安装在同一位置。

Thermal-link is a non-repairable device. For safety aspect, it shall be replaced by an equivalent Thermal-link, and it should be correctly installed in the same position in strict accordance with the same method.

11.2 安装操作 Installation operation

11.2.1 如果需加工弯折引脚，则应确保弯折处与本体间的距离，如下图所示。

If the lead wire has to be bent, please pay attention to the distance between body and the bending point. Refer to as shown below.

引线直径（D） Lead diameter	弯折处与本体距离（L） Distance between bend and body
D≤Φ1 mm	L≧3 mm
D＞Φ1 mm	L≧5 mm

请参考如下弯折加工示意图 Please refer to the following bending processing diagram：

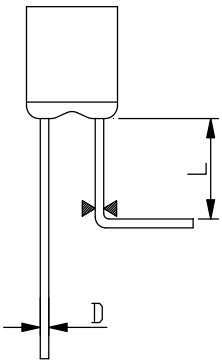

（方壳产品Square shell products）

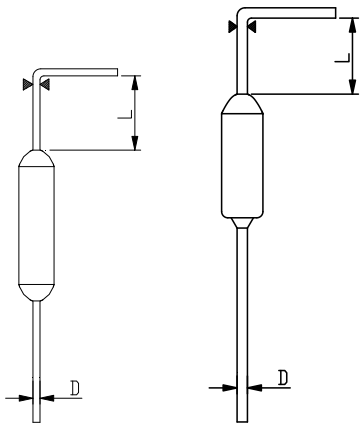

（管状产品Tubular products）

11.2.2 弯折引脚时请使用夹锭钳或其它类似工具将引脚固定，如上图所示，避免将温度保险丝损坏。

When bending the lead wire, please use pincher or similar other tools to fix it as shown above, to avoid damaging the Thermal-link.

11.2.3 在引脚成型和安装过程中，对引脚进行裁剪、弯折加工时，勿用力过猛，以免造成产品部件断裂或本体损伤。

During forming and installation, the lead wire should not be cut and bent sharply, so as to avoid breaking the product.

11.2.4 应避免直接对引脚根部施加外力，或与温度保险丝的本体形成一定角度的拉力或推力，以免损伤到温度保险丝的密封树脂。

It should be avoided to directly apply external force on the root of the lead wire, or form a certain angle of thrust or tension with the body of the Thermal-link, so as to avoid damaging the sealing resin of the Thermal-link.

11.2.5 在设计终端产品时，应考虑到与引脚接触的零部件因膨胀及收缩所造成的应力、振动或其他运动对温度保险丝产生不良影响，应采用柔韧的、易弯曲的或低阻抗的引线来连接温度保险丝。

When designing the terminal product, the stress, vibration or other movement caused by the expansion and contraction of the parts in contact with the lead wires should be taken into account, and the flexible and flexible leads or low resistance leads should be used to connect the Thermal-link.

11.2.6 应确保连接处的接触电阻为最小值，且对连接点进行检查以确保引脚与被连接物连接可靠。不正确的连接安装可能会造成温度保险丝提前失效，或引起密封树脂处或其他部件的损伤，并且不良的连接会产生较高阻抗，可能会导致元器件过热而引起断路或损坏。

Contact resistance should be minimal, and check the connection point to ensure that the connection between the lead and the connected object is reliable. Improper connection may cause premature failure of the Thermal-link, causing damage to the sealing resin or other components, and improper connection may cause high resistance, which may cause overheating of components and cause open circuit or damage.

11.3 引脚焊接 Soldering

11.3.1 温度保险丝为热敏感组件，若安装时采用焊接的方式，建议采用手工烙铁或过锡焊锡，不建议使用波峰焊。

Thermal-link is a heat sensitive device, If soldering is used during installation, it is recommended to use manual soldering iron, wave soldering is not recommended.

11.3.2 温度保险丝为热敏感组件（内部的易熔感温元件为低温合金或热敏感温体），若安装时采用焊接的方式，应确保引脚足够长，建议采用手工烙铁或过锡焊锡，不建议使用波峰焊。额定动作温度Tf值高于130℃的保险丝，若制程设计为需使用波峰焊接，则焊接后，应当再量测保险丝是否为导通状态，或用X-Ray透视检测内部的易熔感温元件（低温合金或热敏感温体）是否有熔化情形，以确保保险丝在高温焊接过程中未受到热源的损伤。

Thermal-link is a heat sensitive device (the internal fusible temperature-sensing component is a low-temperature alloy or a heat sensitive temperature body), If the installation is performed by welding, ensure that the pin is long enough. It is recommended to use manual soldering iron or over-tin soldering instead of wave soldering. For the fuse with rated operating temperature Tf value higher than 130 ℃, if the manufacturing process is designed to use wave soldering, after welding, shall be to measure whether the Thermal-link is in the conduction state, or with X- Ray detection of internal temperature-sensing component (low-temperature alloy or heat sensitive temperature body) whether there is melting, so as to ensure that the Thermal-link is not damaged during high-temperature welding process.

11.3.3 由于温度保险丝中的感温元件是可熔化的，因此不正确的焊接操作（例如：温度过高、焊锡时间过长、引脚过短等）可能会导致保险丝内部的感温体被引脚传导的过高热量而受到影响，从而致使温度保险丝提前熔断。

Because the temperature-sensing component in the Thermal-link is fusible, improper soldering (for example, too high soldering temperature, too long soldering time, or too short lead wire etc.) will cause the thermal element inside to be affected by the excessive heat conducted by the lead wire, thus causing the Thermal-link to melt in advance.

11.3.4 为防止焊接时的热量引发温度保险丝动作，建议焊接时视需要在焊接点和温度保险丝主体间的引脚上增加辅助散热装置（如散热夹），以便热量散发，并在规定的焊锡时间内完成。焊接依下表所列的条件进行。

In order to prevent the fusing of Thermal-link caused by the heat during soldering, it is recommended to add auxiliary heat dissipation device (such as heat-radiating clip) between solder point and Thermal-link body as necessary, so as to dissipate the heat and complete the soldering within the specified soldering time. Soldering should be carried out according to the conditions listed in the table below.

额定动作温度 Rated Function Temperature (Tf)	距离本体的引线长度及最大允许焊接时间 Lead length from the body and the maximum allowable soldering time			焊锡条件 Soldering Conditions
	10mm	15mm	20mm	
76℃≤Tf≤100℃	1 s	2 s	3 s	焊锡温度 Soldering Temperature: 300℃
101℃≤Tf≤130℃	2 s	3 s	4 s	
Tf>130℃	3 s	4 s	5 s	

11.3.5 焊接时应小心谨慎，以避免温度保险丝主体和引脚遭受到拉力、推力以及扭力的损伤。

Perform the soldering operation carefully, avoid the damage of the pull, thrust and twist tensions to the body and leads of Thermal-link.

11.3.6 焊接后应让温度保险丝自然冷却20秒以上，冷却期间请勿移动温度保险丝的本体及引脚。

After soldering, allow the Thermal-link to cool naturally for more than 20 seconds. Do not move the body and leads of the Thermal-link during cooling time.

12. 规格书的修订和有效性 Revision and validity of specifications

12.1 修订协议 Agreement of revision

以上所有参数均可依客户订单要求订制。本规格书的内容若有不充分或有必要修订时，须由双方协商确认并由本公司修改。

All the above parameters can be customized according to customer's order requirements. If the content of this specification is insufficient or necessary to be revised, it shall be confirmed by mutual agreement between the parties and modified by our company.

12.2 有效性 Validity

贵司承认期间本规格书可暂时使用，若1个月后贵司无异议或无签回承认，则将之视为有效文件运行。

This specification can be used temporarily during your acceptance period. If you have no any objection or sign back after one month, it will be regarded as a valid document.

13. 履历表 Revision History:

序号 No.	日期 Date	版本号 Version number	修订内容 Revised content
1	2021.8.9	A/0	初始版本 First edition
2	2023.4.27	A/1	修改第6项检验方法及标准、第11.3.2项引脚焊接之内容说明。