集电通
JDT FUSE

为 您 的 产 品 保 驾 护 航

PRODUCT DATASHEET

Surface Mount Fuse

JFC2410TS TIME-LAG FUSE

JFC2410TS TIME-LAG FUSE

Descriptions

JFC2410TS series are time-lag square Surface Mount fuses are ceramic tube/end cap constructions, RoHS compliant, Halogen Free and lead(Pb) exempts of the requirements of RoHS Directive, with U.S. (UL/CSA) safety agency approvals. Provide board level primary and secondary circuit protection in a wide variety of applications. With excellent inrush current withstanding capability, excellent reliability for thermal and mechanic shock, also have a high reliability and stable solder ability, end caps are available in gold/silver/nickel plated.

Agency Approvals

Agency	Agency File Number
TÜVRheinland	J50678258
UL	E486200

Features

- One time positive disconnect
- Time-Lag for excessive current
- Low temperature derating
- Tape and Reel for automatic placement
- Wide range of current rating available
- Operating temperature:- 55 °C to +125 °C
- Conflict free metals
- RoHS,REACH compliant and Halogen-Free

Applications

- LED lighting
- Notebook PC
- Battery devices
- LCD/PDP devices
- LCD backlight in verter
- Portable Device
- Power supply
- Networking devices
- PC server
- Cooling fan system
- Storage system
- Telecom system
- Wireless base station
- White goods
- Game console
- Digital camera
- Office equipment
- Automotive devices
- Medical equipment
- Industrial equipment

Electrical Characteristics

- Pre-Arcing Time / Current Characteristics:

% of Ampere Rating(In)	Opening Time
100%*In	4 hours Min
200%*In	60 sec Max
1000%*In	10ms Min

Performance Specification

Part Number	Rated Current (A)	Max Voltage Rating(V)	Interrupting Rating	Nominal Cold Resistance (mΩ)	Nominal Melting I^2t (A^2sec)
JFC2410-0062TS	0.062	250V	50A@250V 100A@125V	5645	0.00028
JFC2410-0080TS	0.008			4126	0.00363
JFC2410-0100TS	0.10			3136	0.0404
JFC2410-0160TS	0.16			2295	0.0638
JFC2410-0200TS	0.20			1646	0.0682
JFC2410-0250TS	0.25			1446	0.0715
JFC2410-0300TS	0.30			847	0.2101
JFC2410-0315TS	0.315			646	0.2222
JFC2410-0375TS	0.375			608	0.3630
JFC2410-0400TS	0.40			577	0.4089
JFC2410-0500TS	0.50			316	0.520
JFC2410-0600TS	0.60			263	0.852
JFC2410-0630TS	0.63			252	1.085
JFC2410-0700TS	0.70			226	2.315
JFC2410-0750TS	0.75			224	2.464
JFC2410-0800TS	0.80			201	2.618
JFC2410-1100TS	1.00			126	4.059
JFC2410-1125TS	1.25			90.2	4.136
JFC2410-1150TS	1.50			83.8	7.441
JFC2410-1160TS	1.60			72.3	7.485
JFC2410-1200TS	2.00			35.6	13.365
JFC2410-1250TS	2.50			33.2	17.627
JFC2410-1300TS	3.00			24.5	23.716
JFC2410-1315TS	3.15			24.7	28.325
JFC2410-1350TS	3.50			22.1	33.055
JFC2410-1400TS	4.00			18.2	47.528
JFC2410-1500TS	5.00			12.5	60.775
JFC2410-1600TS	6.00			10.2	82.769
JFC2410-1630TS	6.30			9.15	102.905
JFC2410-1700TS	7.00			8.63	106.832
JFC2410-1800TS	8.00	125V	100A@125V	7.33	119.625
JFC2410-2100TS	10.0			6.48	130.218
JFC2410-2120TS	12.0			4.36	154.088
JFC2410-2150TS	15.0			2.86	231.748

Part Number	Rated Current (A)	Max Voltage Rating(V)	Interrupting Rating	Nominal Cold Resistance (mΩ)	Nominal Melting I^2t (A^2sec)
JFC2410-2160TS	16.0	72V	500A@72V	2.68	236.775
JFC2410-2200TS	20.0			1.88	393.888
JFC2410-2250TS	25.0			1.36	511.687
JFC2410-2300TS	30.0			1.22	1088.615
JFC2410-2400TS	40.0	63V	500A@63V	1.13	1155.858
JFC2410-2500TS	50.0			0.86	2317.5
JFC2410-2600TS	60.0			0.57	3375.0

Dimensions and Structure

- Outline Drawing and dimensions (unit : mm)

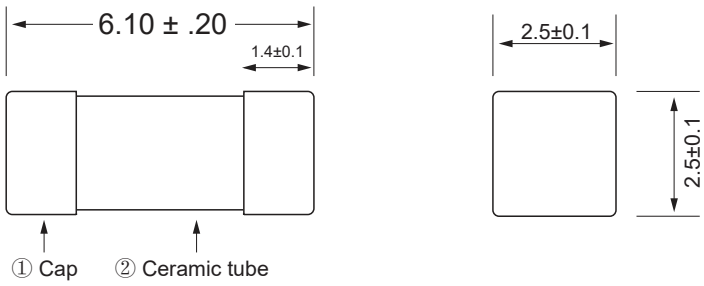

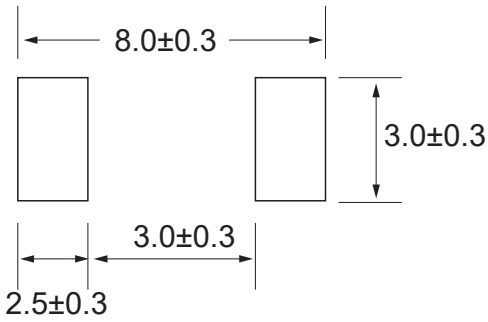

Recommended pad layout

- Material Details:

NO.	Component	Material
①	End caps	Silver Plated Brass Cap
②	Body	Non-Transparent Square Ceramic Tube
③	Fuse element	Cu-Ag Alloy wire

Product Characteristics

No.	Item	Contain	Reference standard
1	Insulation Resistance	10,000 ohms minimum	MIL-STD-202G, Method 302 Test ConditionA
2	Solderability	T=240°C±5°C, t=5+0/-0.5s, Cover≥95%	MIL-STD-202G, Method 208H
3	Resistance to Soldering Heat	10 sec at 260°C	MIL-STD-202G, Method 210F Test Condition B
4	Thermal Shock	5 cycles, -65°C to +125°C, 15minutes @each extreme	MIL-STD-202G, Method 107G Test Condition B
5	Mechanical Shock	100G's peak for 6 milliseconds, 3 cycles	MIL-STD-202G, Method 213B Test 1
6	Vibration	0.03" amplitude, 10-55 Hz in 1 min. 2hrs each XYZ=6hrs	MIL-STD-202G, Method 201A
7	Moisture Resistance	10 cycles	MIL-STD-202G, Method 106G
8	Salt Spray	5% salt solution,48hrs	MIL-STD-202G, Method 101E Test Condition B
9	Operating Temperature	-55°C to +125°C	IEC60068-2-1/2

Environmental Characteristic

- Company operating temperature of the environment more than 25+/-5℃, in the selection of fuse specifications, it needs to consider the impact of the operating environment of the temperature fuse. Photo: temperature derating curve.

Temperature Rerating Curve

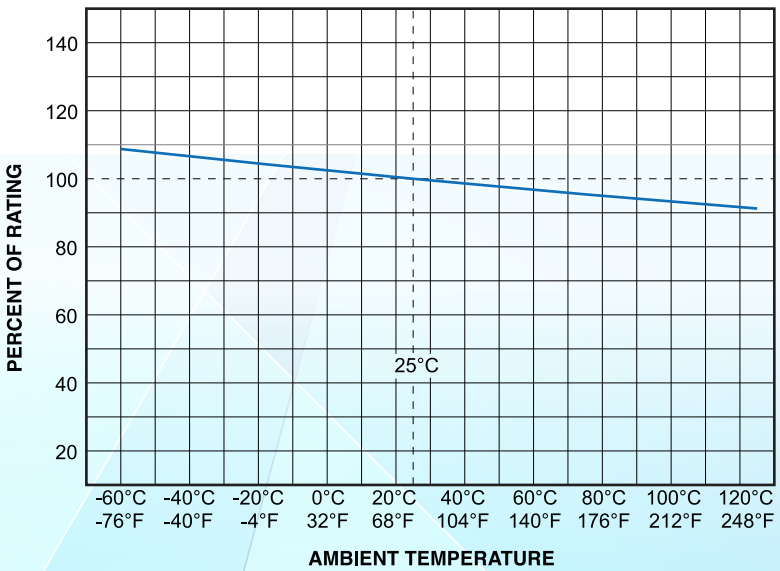

Average Time-Current Curve

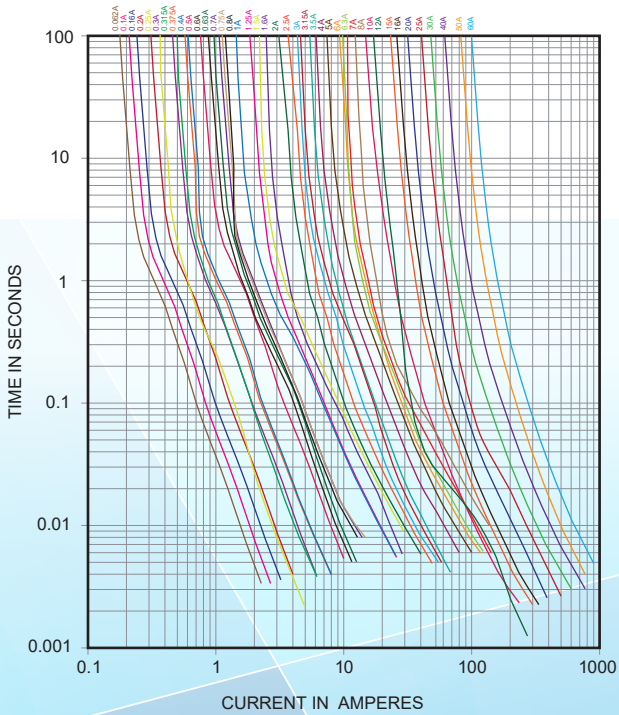

Recommended Soldering Parameters

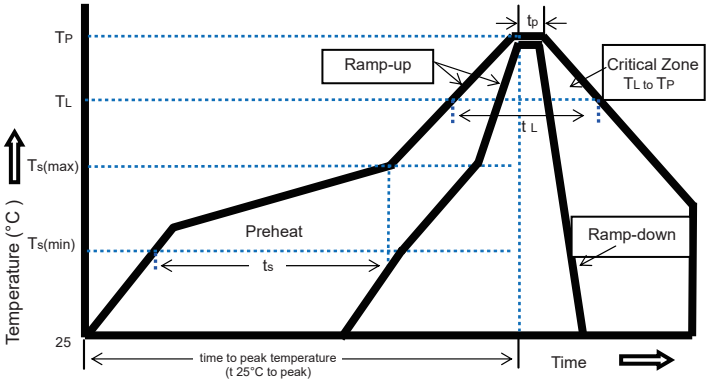

Reflow Condition		Pb-Free assembly
Average ramp-up rate(Ts(max)to Tp)		5°C/second max.
Preheat	Temperature Min (Ts(min))	150°C
	Temperature Max (Ts(max))	200°C
	Time (Min to Max)(ts)	60~120 seconds
Reflow	Temperature (T_L)	220°C
	Time Max (t_L)	60 seconds
Peak Temperature (Tp)		260°C max
Ramp-down Rate		5°C/second max
Time 25°C to peak Temperature(Tp)		8 minutes max

Soldering Method		Parameter
Wave/Reflow solder	Solder paste process	
	Solder Pot Temperature	260°C max
	Solder Dwell Time	5 seconds max
Hand-Solder	Solder Iron Temperature	300±5°C max
	Heating Time	1-2 s max

Packing

No.	Quantity &Packaging Code
JFC2410TS	1500 fuses/reel (12mm tape-and-reel on a 7 inch (178mm) reel per EIA Standard 481)

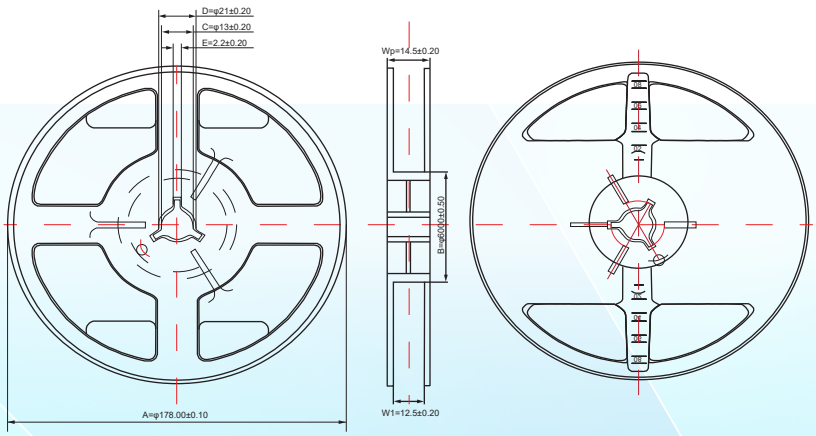

Item	A	B	C	D	E	W1	W2
Spec.(mm)	178±0.10	60±0.50	13±0.20	21±0.20	2.2±0.20	12.5±0.20	14.5±0.20

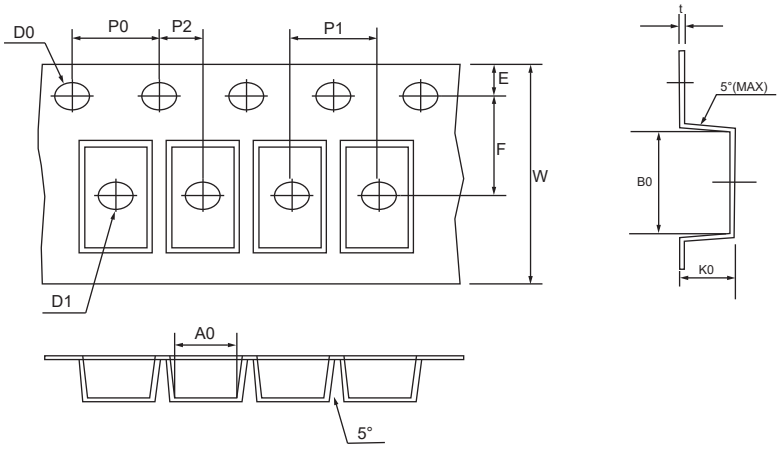

Item	A0	B0	D0	D1	E	F
Spec.(mm)	2.70±0.10	6.4±0.10	1.5±0.10	1.50±0.25	1.75±0.10	5.50±0.10
Item	**K0**	**P0**	**P1**	**P2**	**W**	**t**
Spec.(mm)	2.70±0.10	4.00±0.10	4.00±0.10	2.0±0.10	12.00±0.15	0.25±0.05

Part Numbering

JF C 2410 - xxxx T S

- S=SMD
- T=Time-Lag
- Rated Current
- 2410 Series
- C=Ceramic
- JF=JDT Fuse

OTHERS

- If in use beyond the requirements of the specifications, must pass through the mutual confirmation !
- If the specification is not appropriate, must through consultation between the two sides and by the company to modify.
- It could be in conformance with another file which made by our company.