APPROVAL SHEET

WR10_V, WR12_V, WR08_V, WR06_V, WR04_V

±1%, ±5%

General Purpose Chip Resistors
Size 1210, 1206, 0805, 0603, 0402

Automotive grade AEC-Q200 qualified
Anti-Sulfuration ASTM B-809 60°C 500hs

RoHS 2 Compliant with exemption 7C-I
Halogen free

*Contents in this sheet are subject to change without prior notice.

Copyright © by Walsin Technology Corporation. | All rights reserved.

FEATURES

1. Automotive grade AEC-Q200 qualified
2. Anti-sulfuration ASTM B-809 60°C 500hrs qualified
3. 100% CCD inspection
4. RoHS 2 compliant with exemption 7C-I and Halogen free products

APPLICATIONS

- Automotive application
- Consumer electrical equipment
- EDP, Computer application
- Telecom application

DESCRIPTION

The resistors are constructed in a high grade ceramic body (aluminum oxide). Internal metal electrodes are added at each end and connected by a resistive paste that is applied to the top surface of the substrate. The composition of the paste is adjusted to give the approximate resistance required and the value is trimmed to within tolerance by laser cutting of this resistive layer.

The resistive layer is covered with a protective coat. Finally, the two external end terminations are added. For ease of soldering the outer layer of these end terminations is a Tin (lead free) alloy.

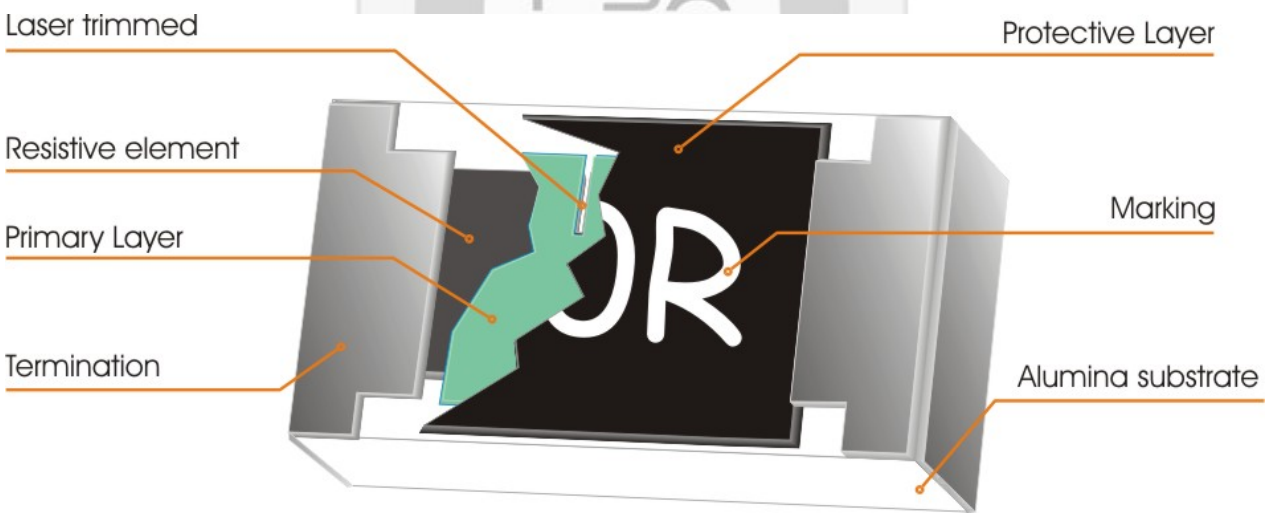

Fig 1. Construction of Chip-R

Copyright © by Walsin Technology Corporation. | All rights reserved.

QUICK REFERENCE DATA

Item	General Specification				
Series No.	WR10_V	WR12_V	WR08_V	WR06_V	WR04_V
Size code	1210 (3225)	1206(3216)	0805(2012)	0603(1608)	0402(1005)
Resistance Range	1Ω~10MΩ (±5% tolerance) 1Ω~10MΩ (±1% tolerance)				
Resistance Tolerance	±1% E96/E24 ±5% E24				
TCR (ppm/°C) R>1MΩ 10Ω < R ≦1MΩ R≦ 10Ω	 ≤ ± 200 ≤ ± 100 -200~+400	 ≤ ± 200 ≤ ± 100 -200~+400	 ≤ ± 200 ≤ ± 100 -200~+400	 ≤ ± 200 ≤ ± 100 -200~+400	 ≤ ± 200 ≤ ± 100 -200~+400
Max. dissipation @ T_{amb}=70°C	1/2 W	1/4 W	1/8 W	1/10 W	1/16 W
Max. Operation Voltage (DC or RMS)	200V	200V	150V	75V	50V
Max. Overload Voltage (DC or RMS)	400V	400V	300V	150V	100V
Operation temperature	-55 ~ +155°C				

Note :

1. This is the maximum voltage that may be continuously supplied to the resistor element, see “IEC publication 60115-8”
2. Max. Operation Voltage : So called RCWV (Rated Continuous Working Voltage) is determined by
3. $RCWV = \sqrt{Rated\,Power \times Resistance\,Value}$ or Max. RCWV listed above, whichever is lower.

For Jumper (0Ω) :

Item		General Specification				
Series No.		WR10_V	WR12_V	WR08_V	WR06_V	WR04_V
Size code		1210(3225)	1206(3216)	0805(2012)	0603(1608)	0402(1005)
Resistance Range		≤50mΩ for P tolerance ≤30mΩ for F tolerance				
TCR (ppm/°C)		TCR is not applicable for Jumper product				
Max. dissipation @ T_{amb}=70°C		1/2 W	1/4 W	1/8 W	1/10 W	1/16 W
P tol.	Rated Current	3A	2A	1.5A	1A	1A
	Peak Current	6A	5A	3.5A	3A	1.5A
F tol.	Rated Current	4A	2.9A	2A	1.8A	1A
	Peak Current	10A	5.8A	4A	3.6A	2A
Operation temperature		-55 ~ +155°C				

.

Copyright © by Walsin Technology Corporation. | All rights reserved.

DIMENSIONS (unit : mm)

Series No	WR10	WR12	WR08	WR06	WR04
L	3.10 ± 0.10	3.10 ± 0.10	2.00 ± 0.10	1.60 ± 0.10	1.00 ± 0.05
W	2.60 ± 0.10	1.60 ± 0.10	1.25 ± 0.10	0.80 ± 0.10	0.50 ± 0.05
T	0.55 ± 0.10	0.60 ± 0.15	0.50 ± 0.15	0.45 ± 0.15	0.35 ± 0.05
Tb	0.50 ± 0.20	0.45 ± 0.20	0.40 ± 0.20	0.30 ± 0.15	0.25 ± 0.10
Tt	0.50 ± 0.20	0.50 ± 0.20	0.40 ± 0.20	0.30 ± 0.10	0.20 ± 0.10

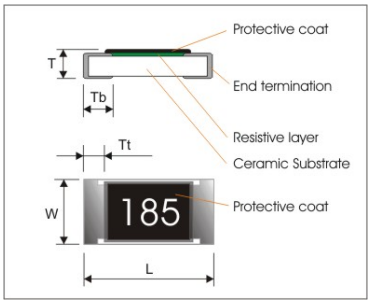

CATALOGUE NUMBERS

The resistors have a catalogue number starting with .

WR12	X	472_	J	T	L	V
Size code WR10: 1210 WR12 : 1206 WR08 : 0805 WR06 : 0603 WR04 : 0402	**Type code** **X :** Jumper ±5% tol. 1Ω ~ 10MΩ ±1% tol. 10Ω ~ 1MΩ **W** : ±1% tol. 1Ω≤R<10Ω 1MΩ<R≤10MΩ	**Resistance code** ±5%,E24: 2 significant digits followed by no. of zeros and a blank 4.7Ω =**4R7_** 10Ω =**100_** 220Ω =**221_** ("_" means a blank) ±1%,E24+E96: 3 significant digits followed by no. of zeros 102Ω =**1020** 37.4KΩ =**3742** 82Ω =**82R0** For Jumper (0Ω) P tol. ≤ 50mΩ=**000_** F tol. ≤ 30mΩ=**0000** ("_" means a blank)	**Tolerance** F : ±1% J : ±5% For Jumper (0Ω) P : ≤ 50mΩ F : ≤ 30mΩ	**Packaging code** **T** :7" Reeled taping **Q** :10" Reeled taping **G** :13" Reeled taping **H** :13" reel 50Kpcs only for 0402 **B** :Bulk **D** :7" reel 20Kpcs only for 0402 **A** :7" reel 15Kpcs only for 0402	**Termination code** L= Sn base (lead free)	**Special code** **V =** 1.100% CCD visual check 2. Automotive grade AEC-Q200 qualified 3. Anti-sulfur ASTM B-809 60°C 500hrs

Remark:

1210, 1206, 0805, 0603:

1. 8mm width paper taping 5000pcs per 7" reel, 10kpcs per 10" reel, 20kpcs per 13" reel.
2. Bulk packaging: 5000pcs per poly-bag

0402:

1. 8mm width paper taping 10,000pcs per 7" reel, 70kpcs per 13" reel.
2. Bulk packaging: 5000pcs per poly-bag

Copyright © by Walsin Technology Corporation. | All rights reserved.

MARKING

Size \ Nr. Of digit of code\tolerance	±5% & Jumper (0Ω)	±1%
1210 (3225)	3 digits marking	4 digits marking
1206 (3216)	3 digits marking	4 digits marking
0805 (2012)	3 digits marking	4 digits marking
0603 (1608)	3 digits marking	3 digits marking
0402 (1005)	NO MARKING	

3 digits marking【±5% 1210,1206, 0805, 0603, & Jumper (0Ω) 】

Each resistor is marked with a three digits code on the protective coating to designate the nominal resistance value.

3 digits marking（±1% : 0603）

Nominal resistance	Description
1.E24 series	2 significant digits followed by No. of zeros . (As *0603 WR06X* ±5%) Example

RESISTANCE	4.7Ω	47Ω	470Ω	4K70	47K0	470K	4M70
3 digits marking	4R7	470	471	472	473	474	475

2.E96 series

The 1st two digit codes are referring to the CODE on the table, the 3rd code is the index of resistance value.
Repeat values between E24 and E96 series, whose marking are based on the E96 CODE table.

Code	Z	Y	X	A	B	C	D	E	F	G
Multiplier	10^{-3}	10^{-2}	10^{-1}	10^{0}	10^{1}	10^{2}	10^{3}	10^{4}	10^{5}	10^{6}

Example

RESISTANCE	1.78Ω	17.8Ω	178Ω	1K78	17K8	178K	1M78
3 digits marking	25Y	25X	25A	25B	25C	25D	25E

3. Remark: There is no marking for the items not under E24 and E96 series.

E96 CODE table:

CODE	R value	CODE	R-value	CODE	R-Value	CODE	R-value	CODE	R-value	CODE	R-value	CODE	R-value	CODE	R-value
01	**100**	13	**133**	25	**178**	37	**237**	49	**316**	61	**422**	73	**562**	85	**750**
02	**102**	14	**137**	26	**182**	38	**243**	50	**324**	62	**432**	74	**576**	86	**768**
03	**105**	15	**140**	27	**187**	39	**249**	51	**332**	63	**442**	75	**590**	87	**787**
04	**107**	16	**143**	28	**191**	40	**255**	52	**340**	64	**453**	76	**604**	88	**806**
05	**110**	17	**147**	29	**196**	41	**261**	53	**348**	65	**464**	77	**619**	89	**825**
06	**113**	18	**150**	30	**200**	42	**267**	54	**357**	66	**475**	78	**634**	90	**845**
07	**115**	19	**154**	31	**205**	43	**274**	55	**365**	67	**487**	79	**649**	91	**866**
08	**118**	20	**158**	32	**210**	44	**280**	56	**374**	68	**499**	80	**665**	92	**887**
09	**121**	21	**162**	33	**215**	45	**287**	57	**383**	69	**511**	81	**681**	93	**909**
10	**124**	22	**165**	34	**221**	46	**294**	58	**392**	70	**523**	82	**698**	94	**931**
11	**127**	23	**169**	35	**226**	47	**301**	59	**402**	71	**536**	83	**715**	95	**953**
12	**130**	24	**174**	36	**232**	48	**309**	60	**412**	72	**549**	84	**732**	96	**976**

4 digits marking（±1% 1210,1206,0805）

For E24/E96 series, each resistor is marked with a four digits code on the protective coating to designate the nominal resistance value. For values below 97Ω6 the R is used as a digit. For values of 100Ω or greater, the first 3 digits are significant, the fourth digit indicates the number of multiple to follow.

Example

RESISTANCE	Jumper (0Ω)	4.7Ω	10Ω	12Ω	100Ω	6800Ω	47000Ω	470000Ω
3 digits marking (1210, 1206, 0805, 0603 ±5% ,& Jumper)	000	4R7	100	120	101	682	473	474
4 digits marking (1210, 1206, 0805 ±1%)	-	4R70	10R0	12R0	1000	6801	4702	4703

Copyright © by Walsin Technology Corporation. | All rights reserved.

FUNCTIONAL DESCRIPTION

Product characterization

Standard values of nominal resistance are taken from the E24 series for resistors with a tolerance of ±5%, and E96 series for resistors with a tolerance of ±1%. The values of the E24/E96 series are in accordance with "IEC publication 60063"

Derating Curve

The power that the resistor can dissipate depends on the operating temperature; see Fig.2

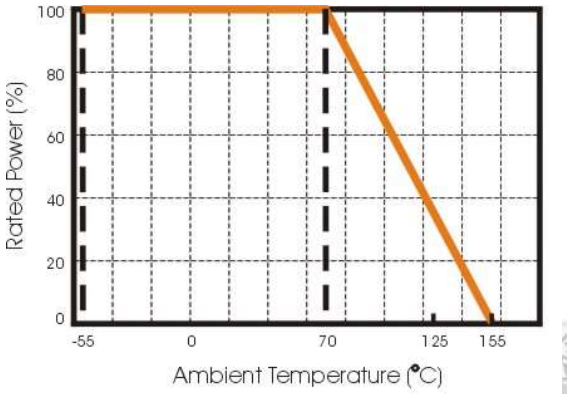

Figure 2 Maximum dissipation in percentage of rated power as a function of the ambient temperature

MOUNTING

Due to their rectangular shapes and small tolerances, Surface Mountable Resistors are suitable for handling by automatic placement systems.

Chip placement can be on ceramic substrates and printed-circuit boards (PCBs).

Electrical connection to the circuit is by individual soldering condition.

The end terminations guarantee a reliable contact.

STORAGE AND HANDLING CONDITIONS:

1. Products are recommended to be used up within two years since operation date as ensured shelf life. Check solderability in case shelf life extension is needed.
2. To store products with following condition:

   Temperature : 5 to 40°C

   Humidity : 20 to 70%, relative humidity condition MSL 1
3. Caution:

   a. Don't store products in a corrosive environment such as sulfide, chloride gas, or acid.

      It may cause oxdization of electrode, which easily be resulted in poor soldering.

   b. To store products on the shelf and avoid exposure to moisture.

   c. Don't expose products to excessive shock, vibration, direct sunlight and so on

Copyright © by Walsin Technology Corporation. | All rights reserved.

SOLDERING CONDITION follows J-STD-020D

The robust construction of chip resistors allows them to be completely immersed in a solder bath of 260°C for 10 seconds. Therefore, it is possible to mount Surface Mount Resistors on one side of a PCB and other discrete components on the reverse (mixed PCBs).

Surface Mount Resistors are tested for solderability at 235°C during 2 seconds. The test condition for no leaching is 260°C for 30 seconds. Typical examples of soldering processes that provide reliable joints without any damage are given in Fig 3.

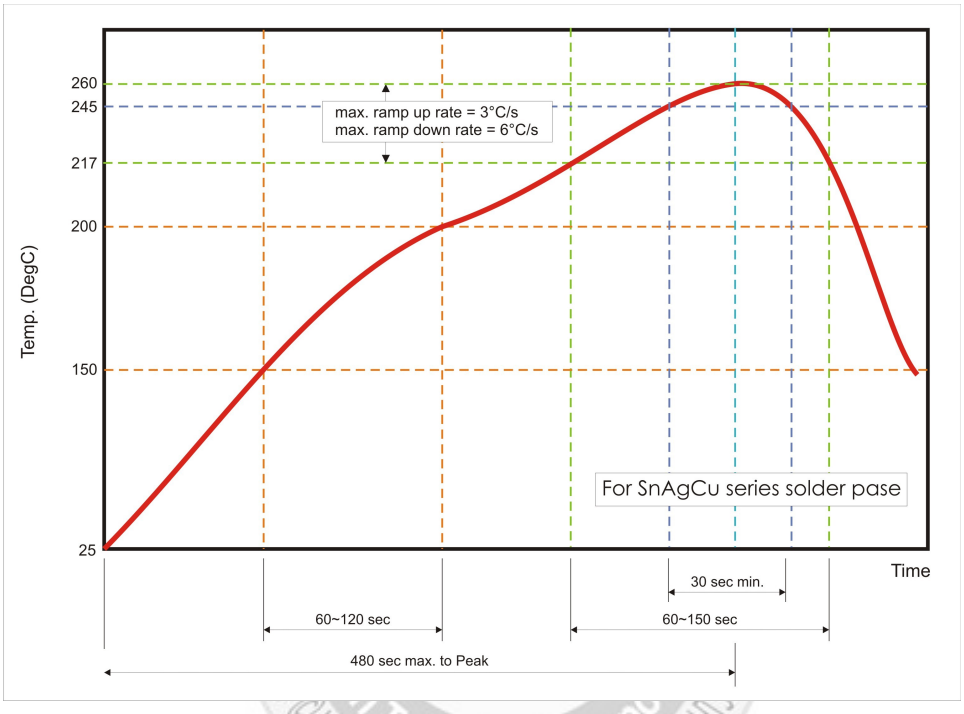

Fig 3. Infrared soldering profile for Chip Resistors

Copyright © by Walsin Technology Corporation. | All rights reserved.

TEST AND REQUIREMENTS

Essentially all tests are carried out according to the schedule of IEC publication 115-8, category **LCT**/**UCT**/56(rated temperature range : **L**ower **C**ategory **T**emperature, **U**pper **C**ategory **T**emperature; damp heat, long term, 56 days). The testing also meets the requirements specified by EIA, EIAJ and JIS.

The tests are carried out in accordance with IEC publication 68, "Recommended basic climatic and mechanical robustness testing procedure for electronic components" and under standard atmospheric conditions according to IEC 60068-1, subclause 5.3. Unless otherwise specified, the following value supplied :

Temperature: 15°C to 35°C.

Relative humidity: 45% to 75%.

Air pressure: 86kPa to 106 kPa (860 mbar to 1060 mbar).

All soldering tests are performed with midly activated flux.

TEST	PROCEDURE / TEST METHOD	REQUIREMENT
Short Time Overload JISC5201-1: 1998 Clause 4.13 AEC-Q200-No.1	- DC resistance values measurement - 2.5 times RCWV or max. overload voltage, for 5 seconds	ΔR/R max. ±(2.0%+0.10Ω) Jumper: <50mΩ No visible damage
High Temperature Exposure (Storage) AEC-Q200-No.3	MIL-STD-202 Method 108 1000+48/-0 hours; without load in a temperature chamber controlled 155±3°C	ΔR/R max. ±(2.0%+0.10Ω) Jumper: <50mΩ No visible damage
Temperature cycling AEC-Q200-No.4	JESD22 Method JA-104 1000 cycles, -55°C ~ +155°C, dwell time 5~10min	ΔR/R max. ±(1.0%+0.05Ω) Jumper: <50mΩ No visible damage
Moisture Resistance AEC-Q200-No.6	MIL-STD-202 method 106 65±2°C, 80~100% RH, 10 cycles, 24 hours/ cycle	ΔR/R max. ±(1.0%+0.05Ω) Jumper: <50mΩ No visible damage
Bias Humidity AEC-Q200-No.7	MIL-STD-202 method 103 1000+48/-0 hours; 85°C, 85% RH, 10% of operation power	ΔR/R max. ±(2.0%+0.10Ω) Jumper: <50mΩ No visible damage
Operational Life AEC-Q200-No.8	MIL-STD-202 method 108 1000+48/-0 hours; 35% of operation power, 125±2°C	ΔR/R max. ±(2.0%+0.10Ω) Jumper: <50mΩ No visible damage
External Visual AEC-Q200-No.9	MIL-STD-883 method 2009 Electrical test not required. Inspect device construction, marking and workmanship	No visible damage
Physical Dimension AEC-Q200-No.10	JESD22-B100 The chip dimension prescribed in the detail specification	Within the specified tolerance
Resistance to Solvents AEC-Q200-No.12	MIL-STD-202 Method 215 Solvent is Isopropyl alcohol, immersion 3mins at 25°C and brush 10 strokes with a toothbrush with a handle made of a non-reactive material (wet bristle), immersion and brush 3 times and then air blow dry.	No superficial defect on marking, encapsulation, coating, appearance. Electrical characteristics within products specification and tolerance. Inspect at 3X max. for marking, inspect at 10X for part damage.
Mechanical Shock AEC-Q200-No.13	MIL-STD-202 method 213 Test ½ Sine Pulse/ 1500g peak/ normal duration: 6ms/ Velocity: 15.4ft/sec. Three shocks in each direction, total 18 shocks.	Within product specification tolerance and no visible damage.

Copyright © by Walsin Technology Corporation. | All rights reserved.

TEST	PROCEDURE / TEST METHOD	REQUIREMENT
Vibration AEC-Q200-No.14	MIL-STD-202 Method 204 Test 5g's for 20 min., 12 cycles each of 3 orientations.	ΔR/R max. ±(1.0%+0.05Ω) Jumper: <50mΩ No visible damage
Resistance to soldering heat(R.S.H) AEC-Q200-No.15	MIL-STD-202 method 210 Un-mounted chips completely immersed for 10±1second in a SAC solder bath at 270°C ±5°C	ΔR/R max. ±(1.0%+0.05Ω) Jumper: <50mΩ No visible damage
Thermal shock AEC-Q200-No.16	MIL-STD-202 method 107 Test –55 to 155°C / dwell time 15min/ Max transfer time 20sec /300cycles	ΔR/R max. ±(1.0%+0.05Ω) Jumper: <50mΩ No visible damage
ESD AEC-Q200-No.17	AEC-Q200-002 Test contact 1.0KV (0.5KV for 0402 only)	ΔR/R max. ±(1.0%+0.05Ω) Jumper: <50mΩ No visible damage
Solderability AEC-Q200-No.18	J-STD-002 (a) Bake the sample for 155°C dwell time 4hrs/ solder dipping 235°C / 5sec. (b) Steam the sample dwell time 1 hour/ solder dipping 260°C / 7sec	95% coverage min., good tinning and no visible damage
Electrical Characteristics AEC-Q200-No.19	- DC resistance values measurement - Temperature Coefficient of Resistance (T.C.R) Natural resistance change per change in degree centigrade. $\frac{R_2 - R_1}{R_1(t_2 - t_1)} \times 10^6$ (ppm/°C) t_1 : 20°C+5°C-1°C R_1 : Resistance at reference temperature R_2 : Resistance at test temperature	Within the specified tolerance Refer to "QUICK REFERENCE DATA"
Flammability AEC-Q200-No.20	UL-94 V-0 or V-1 are acceptable	Comply with V0 specifications
Board Flex (Bending strength) AEC-Q200-No.21	AEC-Q200-005 Resistors mounted on a 90mm glass epoxy resin PCB(FR4),bending once 2mm for 10sec.	ΔR/R max. ±(1.0%+0.05Ω) Jumper: <50mΩ No visible damage
Terminal strength (SMD) AEC-Q200-No.22	AEC-Q200-006 Pressurizing force: 1Kg Test time: 60±1sec.	No remarkable damage or removal of the terminations
Sulfuration test	ASTM B-809 60ºC 500hrs	ΔR/R max. ±(1.0%+0.05Ω) Jumper: <50mΩ No visible damage

Copyright © by Walsin Technology Corporation. | All rights reserved.

PACKAGING

Paper Tape specifications (unit :mm)

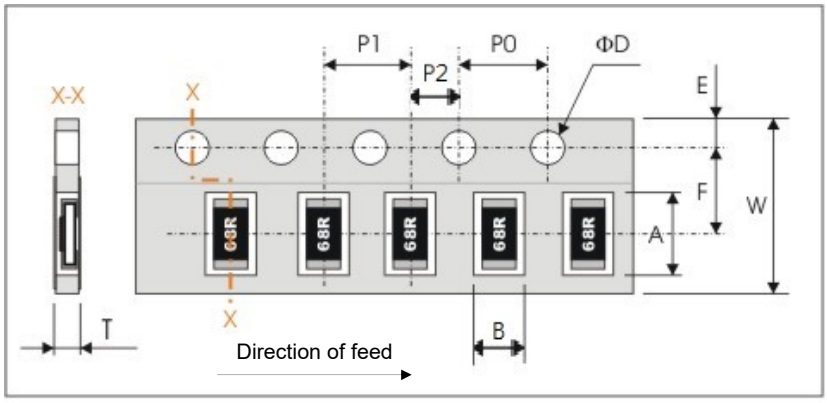

Series No.	A	B	W	F	E
WR10	3.60±0.20	3.00±0.20	8.00±0.30	3.50±0.20	1.75±0.10
WR12	3.60±0.20	2.00±0.20			
WR08	2.40±0.20	1.65±0.20			
WR06	1.90±0.20	1.10±0.20			
WR04	1.20±0.10	0.70±0.10			

Series No.	P1	P0	P2	ΦD	T
WR10/ WR12 / WR08	4.00±0.10	4.00±0.10	2.00±0.10	$\Phi 1.50^{+0.1}_{-0.0}$	Max. 1.0
WR06					0.65±0.05
WR04	2.00±0.10				0.50±0.05

Reel dimensions (unit: mm)

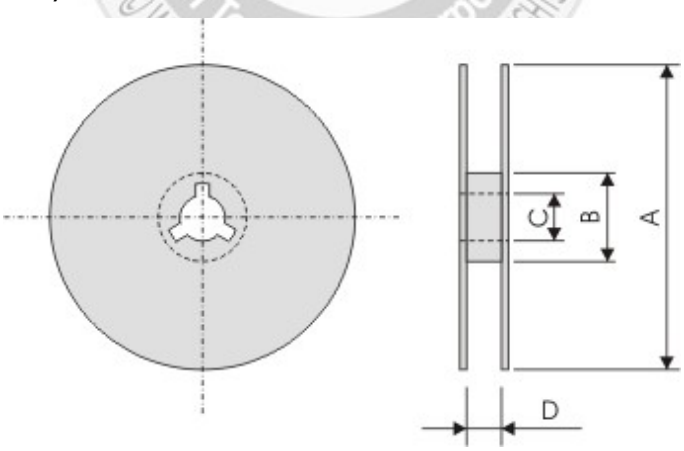

Symbol	A	B	C	D
7” reel	Φ178.0±2.0	Φ60.0±1.0	13.0±0.2	9.0±0.5
10” reel	Φ254.0±2.0	Φ100.0±1.0	13.0±0.2	9.0±0.5
13” reel	Φ330.0±2.0	Φ100.0±1.0	13.0±0.2	9.0±0.5

Copyright © by Walsin Technology Corporation. | All rights reserved.