KNSCHA
Empowering The World

广东科尼盛电子科技有限公司
KNSCHA ELECTRONICS CO., LIMITED

规格承认书

Specification For Approval

客户名称: (Customer Name)	
产品名称: (Product Name)	贴片铝电解电容 SMD Aluminum Electrolytic Capacitor
客户料号: (Customer part number)	
科尼盛料号: (KNSCHA number)	FZ47UF35V90RV0143
型号规格: (Specifications)	SMDE/C 47μF/35V 6.3*5.7mm FZ 2000H
日期: DATE	2026.7.22

制 造 Manufacture	
核 准 APPROVAL	制 作 PREPARED
广东科尼盛电子科技有限公司 技术部 王帅	广东科尼盛电子科技有限公司 技术部 钟林炎

客户承认栏 CUSTOMER APPROVED		
核 准 APPROVED	确 认 CHECKED	经 办 DESIGNED

广东科尼盛电子科技有限公司
KNSCHA ELECTRONICS CO.,LIMITED.
地址：广东省东莞市东坑镇汇金展拓科技园A2-A3栋
Buildings A2-A3, Huijin Zhantuo Science and Technology Park,
Dongkeng Town, Dongguan City, Guangdong Province
电话TEL:0769-83698067 81035570 传真FAX:0769-83861559
邮箱Email：sales@knscha.com 官网Website:http://www.knscha.com

Product Dimensions

Unit: mm

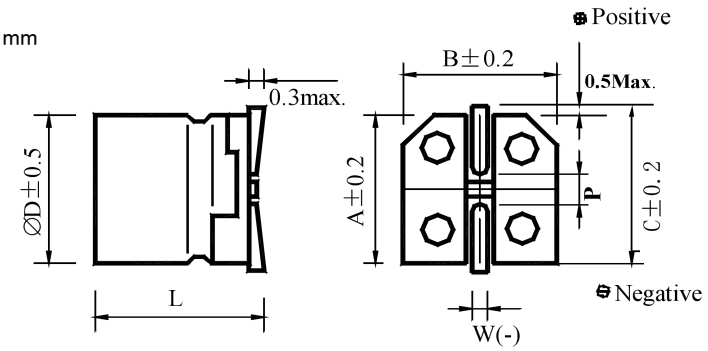

Φ	6.3
L	5.7±0.4
A	6.6
B	6.6
C	7.3
W	0.5~0.8
P	2.2±0.2

Items	Performance
Category Temperature Range	-55℃~105℃
Rated Voltage V_R	35 V
Capacitance C_R	47μF (120Hz, 20℃)
Capacitance Tolerance	± 20 % (120Hz, 20℃)
Surge Voltage V_S	40.25 V_{DC}
Leakage Current (20℃)	I_{LEAK} ≤ 16.45μA After 2 minutes
Tan δ	≤ 0.14 (120Hz, 20℃)
Impedance max.	≤ 0.44Ω (100KHz, 20℃)
Ripple Current ($I_{AC,R}$ / rms)	230mA (100KHz, 105℃)
Low Temperature Characteristics at 120 Hz	Impedance ratio: Z(-25℃) / Z(+20℃) = 2; Z(-55℃) / Z(+20℃) = 3
Ripple Current (A) and Frequency Multipliers	Frequency (Hz): 50, 60 / 120 / 1K / 10k up Multiplier: 0.60 / 0.70 / 0.80 / 1.00
Endurance and Shelf Life Test	Items: Endurance / Shelf Life Test Test Time: 5,000 Hrs at 105℃; V_R / 1,000 Hrs at 105℃ Cap. Change: Within ±30 % of initial value / Within ±30 % of initial value Tan δ: Less than 300% of specified value / Less than 300% of specified value Leakage Current: Within specified value / Within specified value
Standards	JIS C 5101-1, -18, IEC 60384-4
Remarks	RoHS Compliance, Halogen-free

Marking: Each capacitor shall be marked with the following information.
Marking color: Black

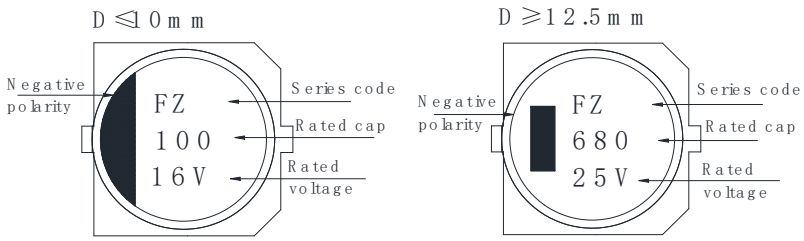

Please refer to "Precautions and Guidelines for Aluminum Electrolytic Capacitors" section in KNSCHA's catalog for further details.

Diagram of Dimensions

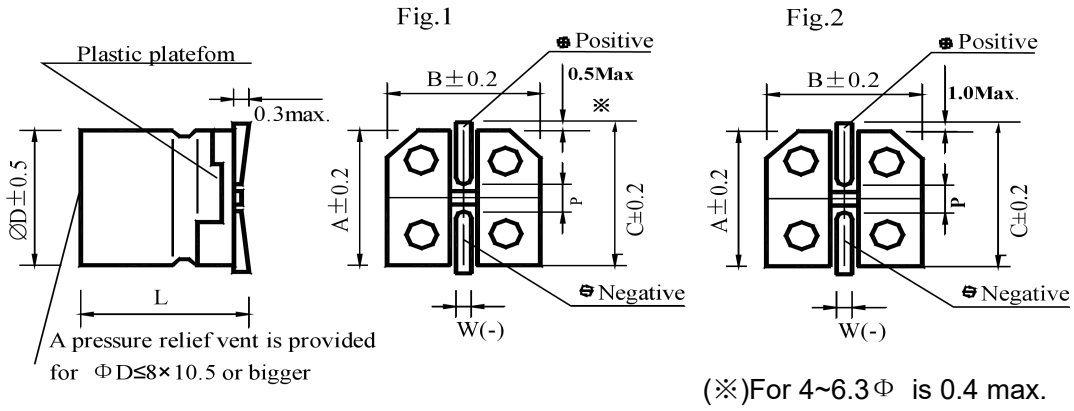

(※)For 4~6.3Φ is 0.4 max.

Unit:mm

D ±0.5	L	A ±0.2	B ±0.2	C ±0.2	w	P ±0.2	Fig.No.
4	$5.4^{\pm0.4}$	4.3	4.3	5.1	0.5to0.8	1.0	1
4	$5.8^{\pm0.4}$	4.3	4.3	5.1	0.5to0.8	1.0	1
4	$7.0^{\pm0.4}$	4.3	4.3	5.1	0.5to0.8	1.0	1
5	$5.4^{\pm0.4}$	5.3	5.3	6.1	0.5to0.8	1.3	1
5	$5.8^{\pm0.4}$	5.3	5.3	6.1	0.5to0.8	1.3	1
5	$7.0^{\pm0.4}$	5.3	5.3	6.1	0.5to0.8	1.3	1
6.3	$5.4^{\pm0.4}$	6.6	6.6	7.2	0.5to0.8	2.2	1
6.3	$5.7^{\pm0.4}$	6.6	6.6	7.2	0.5to0.8	2.2	1
6.3	$7.7^{\pm0.4}$	6.6	6.6	7.2	0.5to0.8	2.2	1
6.3	$7.9^{\pm0.4}$	6.6	6.6	7.2	0.5to0.8	2.2	1
8	$6.5^{\pm0.5}$	8.3	8.3	9.2	0.7to1.2	3.1	1
8	$7.9^{\pm0.5}$	8.3	8.3	9.2	0.7to1.2	3.1	1
8	$10.5^{\pm0.5}$	8.3	8.3	9.2	0.7to1.2	3.1	1
8	$11.5^{\pm0.5}$	8.3	8.3	9.2	0.7to1.2	3.1	1
8	$12.5^{\pm0.5}$	8.3	8.3	9.2	0.7to1.2	3.1	1
8	$13.5^{\pm0.5}$	8.3	8.3	9.2	0.7to1.2	3.1	1
10	$7.7^{\pm0.5}$	10.3	10.3	11.2	0.7to1.2	4.4	1
10	$10.5^{\pm0.5}$	10.3	10.3	11.2	0.7to1.2	4.4	1
10	$11.5^{\pm0.5}$	10.3	10.3	11.2	0.7to1.2	4.4	1
10	$12.5^{\pm0.5}$	10.3	10.3	11.2	0.7to1.2	4.4	1
10	$13.5^{\pm0.5}$	10.3	10.3	11.2	0.7to1.2	4.4	1
12.5	$13.5^{\pm1.0}$	13.0	13.0	13.7	1.0to1.4	4.4	2
12.5	$16.0^{\pm1.0}$	13.0	13.0	14.0	1.0to1.4	4.4	2
16	$16.5^{\pm1.0}$	17.0	17.0	18.0	1.0to1.4	6.4	2
16	$21.5^{\pm1.0}$	17.0	17.0	18.0	1.0to1.4	6.4	2
18	$16.5^{\pm1.0}$	19.0	19.0	20.0	1.0to1.4	6.4	2
18	$21.5^{\pm1.0}$	19.0	19.0	20.0	1.0to1.4	6.4	2

Part Numbering System

Product Code Guide – SMD Type

1. Carrier Tape

Fig. 1-1 Carrier tape ΦD≤10

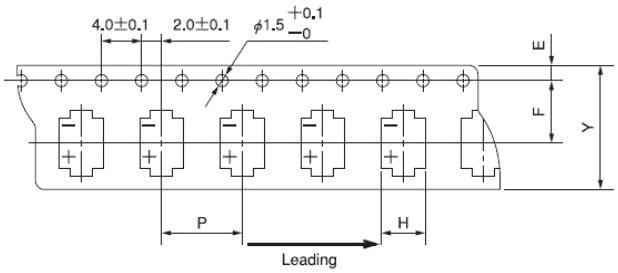

Fig. 1-2 Carrier tape ΦD≥12.5

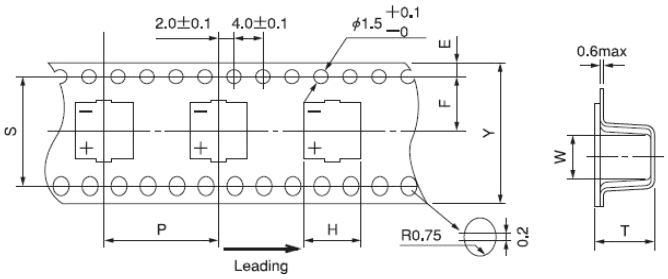

Unit:mm

Size(ΦD×L)	$Y^{\pm0.3}$	$H^{\pm0.2}$	$W^{\pm0.2}$	$P^{\pm0.1}$	$E^{\pm0.1}$	$F^{\pm0.1}$	$T^{\pm0.2}$	$S^{\pm0.1}$	Fig.No.
Φ4×5.4	12.0	5.0	5.0	8.0	1.75	5.5	6.0	—	1-1
Φ4×5.8	12.0	5.0	5.0	8.0	1.75	5.5	6.5	—	1-1
Φ4×7.0	12.0	5.0	5.0	8.0	1.75	5.5	7.5	—	1-1
Φ5×5.4	12.0	6.0	6.0	12.0	1.75	5.5	6.0	—	1-1
Φ5×5.8	12.0	6.0	6.0	12.0	1.75	5.5	6.5	—	1-1
Φ5×7.0	12.0	6.0	6.0	12.0	1.75	5.5	7.5	—	1-1
Φ6.3×5.4	16.0	8.7	8.7	12.0	1.75	7.5	6.0	—	1-1
Φ6.3×5.7	16.0	8.7	8.7	12.0	1.75	7.5	6.5	—	1-1
Φ6.3×7.7	16.0	8.7	8.7	12.0	1.75	7.5	8.2	—	1-1
Φ6.3×7.9	16.0	8.7	8.7	12.0	1.75	7.5	8.5	—	1-1
Φ8×6.5	16.0	8.7	8.7	12.0	1.75	7.5	7.2	—	1-1
Φ8×10.5	24.0	8.7	8.7	16.0	1.75	11.5	11.5	—	1-1
Φ8×11.5	24.0	8.7	8.7	16.0	1.75	11.5	12.0	—	1-1
Φ8×12.5	24.0	8.7	8.7	16.0	1.75	11.5	13.5	—	1-1
Φ8×13.5	24.0	8.7	8.7	16.0	1.75	11.5	14.5	—	1-1
Φ10×7.7	24.0	10.7	10.7	16.0	1.75	11.5	8.5	—	1-1
Φ10×10.5	24.0	10.7	10.7	16.0	1.75	11.5	11.5	—	1-1
Φ10×11.5	24.0	10.7	10.7	16.0	1.75	11.5	12.5	—	1-1
Φ10×12.5	24.0	10.7	10.7	16.0	1.75	11.5	13.5	—	1-1
Φ10×13.5	24.0	10.7	10.7	16.0	1.75	11.5	14.5	—	1-1
Φ12.5×13.5	32.0	13.9	13.9	24.0	1.75	14.2	14.5	28.5	1-2
Φ12.5×16.0	32.0	13.9	13.9	24.0	1.75	14.2	16.5	28.5	1-2
Φ16×16.5	44.0	17.5	17.5	28.0	1.75	20.2	17.5	40.5	1-2
Φ16×21.5	44.0	17.5	17.5	28.0	1.75	20.2	22.5	40.5	1-2
Φ18×16.5	44.0	19.5	19.5	32.0	1.75	20.2	17.5	40.5	1-2
Φ18×21.5	44.0	19.5	19.5	32.0	1.75	20.2	22.5	40.5	1-2

2. Reel Package

Fig. 2-1

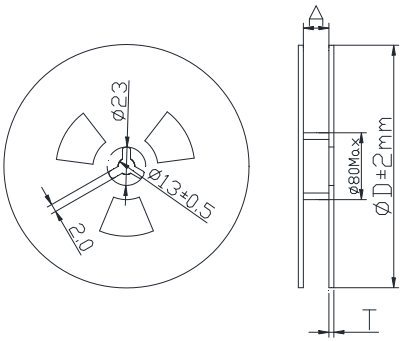

Fig. 2-2

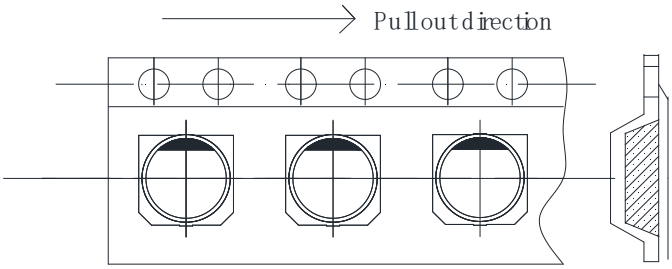

Case size	Φ4~ 5	Φ6.3	Φ8×6.5	Φ8	Φ10	Φ12.5	Φ16~ 18
A	14	18	18	26	26	34	46
D	380	380	380	380	380	380	380
T	3.0	3.0	3.0	3.0	3.0	3.0	3.0

3. Packing specification

Fig. 3-1 Carrier Tape

Unit:pcs

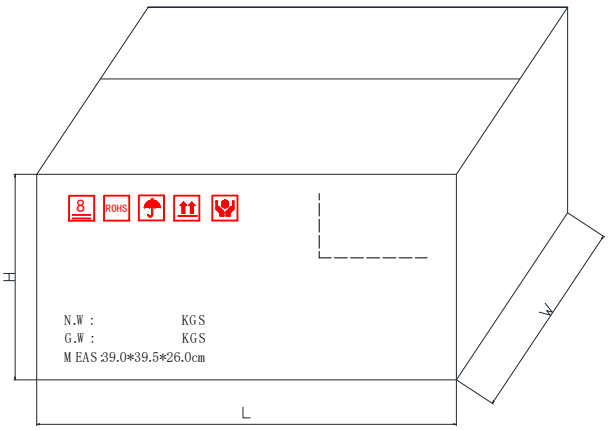

Case size	Q'ty / Reel	Reels/Box	Q'ty/Box
Φ4	2,000	12	24,000
Φ5	1,000	12	12,000
Φ6.3	1,000	10	10,000
Φ8×6.5	1,000	10	10,000
Φ8×10.5	500	10	5,000
Φ8×11.5~13.5	400	10	4,000
Φ10×7.7~10.5	500	10	5,000
Φ10×11.5~13.5	400	10	4,000
Φ12.5×13.5	250	6	1,500
Φ12.5×16	200	6	1,200
Φ16×16.5	125	5	625
Φ16×21.5	100	5	500
Φ18×16.5	125	5	625
Φ18×21.5	100	5	500

Case size	Φ4~ 5	Φ6.3	Φ8×6.5	Φ8	Φ10	Φ12.5	Φ16~ 18
H	260	260	260	340	340	240	260
W	395	395	395	395	395	395	395
L	390	390	390	390	390	390	390

4. Sealing Tape Reel Strength

4.1 Peel angle: 165 to 180℃refered to the surface on which the tape is glued.

4.2 Peel speed: 300mm per minutes

4.3 The peel strength must be 0.1 ~ 0.7N under these conditions.

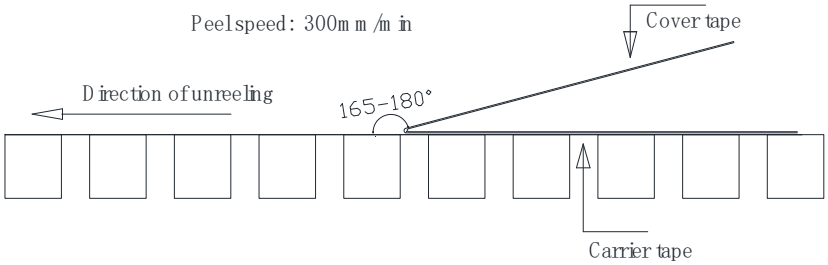

5. Packing Method

5.1 The leader length of the tape shall not be less than 150 mm including 10 or more embossed sections inwhich no parts

are contained.

5.2 the core has an empty section with a length less than 60mm, and the perforation carrier is only suitable for Φ D ≤ 5mm.

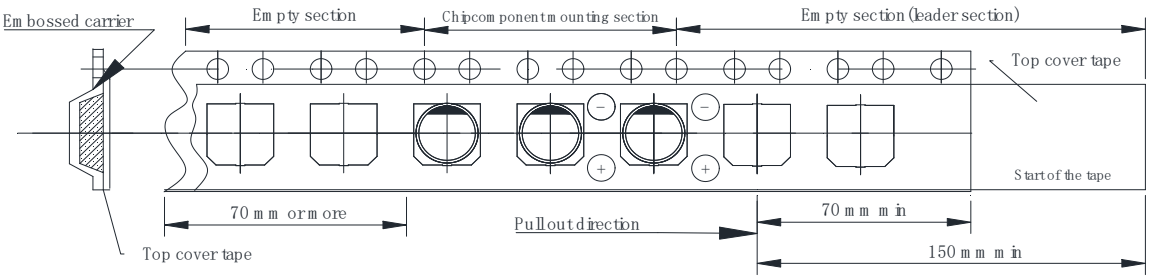

Endurance characteristic:

No.	Item	Conditions	Specification	
1	Rotational Temperature Test	Capacitor is placed in an oven whose temperature follow specific regulation to change. The specific regulation is " +25℃ (3 min.) → −55℃ (30 min.) → +25℃ (3 min.) → +105℃ (30 min.) → +25℃ (3 min.)", and it is called a cycle. The test totals 10 cycles, and then the capacitor shall be subjected to standard atmospheric conditions for 4 hours, after which measurements shall be made.	Capacitance change	Within ± 10% of initial value
			Tan δ	Within specified value
			Leakage Current	Within specified value
			Physical	No broken and undamaged
2	High Temperature Endurance Life Test	1.Capacitors shall be placed in oven with application of rated voltage 2,000+72/−0 hrs for φD ≦ 6.3mm & 8φ×6.5L & 10φ×7.7L, 5,000+72/−0 hrs for φ ≧D 8 mm at 105℃ 2.hen the capacitor shall be subjected to standard atmospheric conditions for 4 hours, after which measurements shall be made.	Capacitance change	Within ± 30% of initial value
			Tan δ	Less than 300% of specified value
			Leakage Current	Within specified value
			Physical	No broken and undamaged
3	High Temperature Unload Life Test	After 1,000 +48 / −0 hours test at 105℃ without rated voltage. And then the capacitor shall be subjected to standard atmospheric conditions for 4 hours, after which measurements shall be made.	Capacitance change	Within ± 30% of initial value
			Tan δ	Less than 300% of specified value
			Leakage Current	Within specified value
			Physical	No broken and undamaged
4	Humidity Test	Capacitors shall be exposed for 1,000 +48 / −0 hours in an atmosphere of 90 ~ 95% R. H. at 60 ±3℃.And then the capacitor shall be subjected to standard atmospheric conditions for 4 hours, afterwhich measurements shall be made.	Capacitance change	Within ± 10% of initial value
			Tan δ	Less than 150% of specified value
			Leakage Current	Within specified value
			Physical	No broken and undamaged
5	Low Temperature Test	Capacitors are placed at −55 ± 3℃ for 96 ± 4 hours. And then the capacitor shall be subjected to standard atmospheric conditions for 4 hours, after which measurements shall be made.	Capacitance change	Within ± 10% of initial value
			Tan δ	Within specified value
			Leakage Current	Within specified value
			Physical	No broken and undamaged
6	Vibration Test	1. Fix it at the point 4 mm or less from body. For ones of 12.5 mm or more in diameter or 25 mm or more length, use separate fixture. 2. Direction and during of vibration:3 orthogonal directions mutually each for 2 hours (total of 6 hours). 3. Frequency:10 to 55 Hz reciprocation for 1 minute. 4. Total amplitude : 1.5 mm	Capacitance change	Within ± 10% of initial value
			Tan δ	Within specified value
			Leakage Current	Within specified value
			Physical	No broken and undamaged
7	Surge Voltage Test	he capacitor shall be subjected to 1,000 cycles at 15 ~ 35℃. Protective series resistor a 1KΩ eachconsisting of a charge period of 30 ± 5 seconds, followed by discharge period of approximately 5.5 minutes.	Capacitance change	Within ± 20% of initial value
			Tan δ	Less than 200% of specified value
			Leakage Current	Within specified value
			Physical	No broken and undamaged

Applying voltage:

Rated Voltage(V)	4	6.3	10	16	25	35	50	63	80	100
Surge Voltage(V)	4.6	7.3	11.5	18.4	28.8	40.3	57.5	72.5	92	115
Rated Voltage(V)	160	200	250	315	350	400	420	450	500	525
Surge Voltage(V)	176	220	275	347	385	440	462	495	550	578

No.	Item	Conditions	Specification	
8	Solderability Test	After the lead wire fully immersed in the solder for 3 ± 0.5 secs at a temperature of 245 ± 5℃, the solder the solder coating must be more than 95%. . Dipping speed: 25±2.5mm/s Dipping time: 3±0.5s	Capacitance change	Within ± 10% of initial value
			Tan δ	Within specified value
			Leakage Current	Within specified value
			Physical	No broken and undamaged
9	Solder Heat-Resistance Test	1. IR Reflow	Capacitance change	Within ± 10% of initial value
			Tan δ	Within specified value
			Leakage Current	Within specified value
			Physical	No broken and undamaged

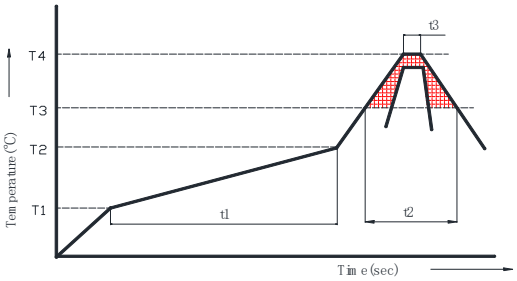

Rated voltage (V)		4-50		63 up	4-100		160 up
Case size (φ)		4-6.3		4-6.3	8-18		8-18
Preheat	Temp.(T1~T2,℃)	150-180					
	Time (t1)(Max,secs)	100					
Duration	Temp.(T3,℃)	217	230	217	217	230	217
	Time (t2)(Max,secs)	90	40	60	60	40	40
Peak	Temp.(T4,℃)	260		250	250		245
	Time (t3,secs)	5					
Reflow cycles		2 or less					

2.Solder iron method:
Bit temperature: 350 ± 5℃
Application time of soldering Iron: 3 +1/-0 sec
※Please contact our representative if your condition is higher.
※Please ensure that the capacitor became cold enough tothe room temperature (5℃ ~ 35℃) before the second reflow.
※Consult with us when performing reflow profile in IPC /JEDEC (J-STD-020)

10	Venting Test	1. pplicable to the capacitors with case size is 8×10 mm and larger. 2. Test condition: (1) AC test: The capacitor shall be connected across an applying 50 or 60 Hz AC which is 0.7 times ofrated voltage or 250Vrms AC whichever is the lower. (2) DC test: Applying inverse DC rated voltage with current to the capacitor. Where case diameter: ϕD ≦ 12.5 mm: 2 A DC max. ϕD＞12.5 mm: 10 A DC max. Note: (1) When the pressure relief vent operated, the capacitor shall avoid any danger of fire or explosion ofcapacitor element (terminal and metal foil etc.) or cover. (2) When the pressure relief device does not open with the voltage applied over 30 minutes, the test isconsidered to be passed.

No.	Item	Conditions
11	Land Pattern	Recommended pad pattern and size Unit:mm 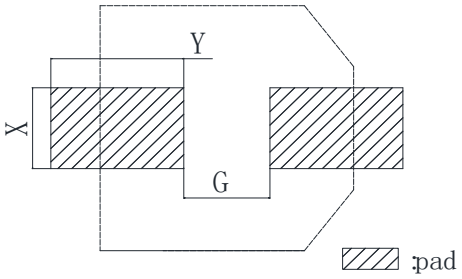 Case size / Land size G / Y / X Φ4: 1.0 / 2.6 / 1.8 Φ5: 1.4 / 3.0 / 1.8 Φ6.3: 1.9 / 3.5 / 1.8 Φ8: 3.0 / 4.0 / 2.5 Φ10: 4.0 / 4.0 / 2.5 Φ12.5: 4.0 / 5.8 / 3.0 Φ16: 6.0 / 6.8 / 3.5 Φ18: 6.0 / 8.0 / 3.5
12	Standards	Satisfies Characteristic JIS C 5101-1, -18

Conforming to RoHS and European REACH Regulation

The capacitors do not intentionally contain the banned substances (Cd, Pb, Hg, Cr(Ⅵ), PBB, PBDE, DEHP, BBP, DBP, DIBP) listed in "RoHS directrive : (EU) 2015/863" and its concentration is less than the threshold values.

Our products are "articles without any intended releas" besed published on 26 May2008. They are not applicable for "Registration" for European REACH Regulation Article 7 (1).

Precautions and Guidelines for Aluminum Electrolytic Capacitors

1.Guidelines for Circuit Design (General / Application guidelines for using electrolytic capacitors)

Selecting of a right capacitor is a key to a good circuit design.

(1)Polarity

Most of the aluminum electrolytic capacitors are polarized. Therefore, they must be installed with the correct polarity. Usage in the reverse polarity results into a short-circuit condition that may damage or even explode the capacitor. In addition, it may influence circuit functionality. A bi-polar electrolytic capacitor should be installed when polarity across a capacitor is unstable / reversible. It should be, however, noted that usage of both polar and bi-polar capacitors are limited to DC applications. They must NOT be used for AC application.

(2)Operating Voltage

Applied DC voltage must not exceed rated voltage of the capacitor. Applying higher voltage than its rated voltage across a capacitor terminals cause overheating due to higher leakage currents and capacitor dielectric/insulation deterioration that will ultimately affect a capacitor's performance. The device, however, is capable of working under short-time transient voltages such as DC transients and peak AC ripples. Reverse voltages higher than 1 Volt with a specified temperature limit or AC voltages are not permissible. Overall, using capacitors at recommended operating voltages can prolong its lifespan. Note that the result of DC voltage overlapped with peak ripple voltage should not exceed rated voltage.

(3)Ripple Current

One of the key functions of any capacitor is removal of the ripple current i.e. the RMS value of AC flowing through a capacitor. But, a ripple current higher than rated ripple current will drop resultant capacitance, cause undue internal heating and thus reduces life span of the capacitor, In extreme cases, internal high temperature will cause the pressure relief vent to operate while destroying the device. Overall, it is important to note that an electrolytic capacitor must be used within a permissible range of ripple current. Indicators like temperature coefficient of allowable ripple current are generally sued to determine life expectancy of the capacitor, but to avoid related complex calculations and for the sake of simplicity, we haven't provided temperature coefficient in the catalogue. But it offers key indicators like maximum operating temperature for calculation of life expectancy at a given temperature.

(4)Operating Temperature

Capacitors should be used within a permissible range of operating temperatures. Using capacitor at a higher temperature than maximum rated temperature will considerably shorten its life. In the worst-case scenario, high temperature can cause pressure relief vent to operate and the device will get destroyed. Using capacitors at an ambient room temperature assure their longer life.

(5)Leakage Current

Leakage current flows through a capacitor when DC voltage is applied across it. Leakage current varies with changes in ambient temperature and applied DC voltage level and its time of application. Overvoltage situation, presence of moisture, and thermal stresses, especially occurring during the soldering process can enhance leakage current. Initial leakage current is usually higher and does not decrease until voltage is applied for a certain period of time. It is recommended to keep initial leakage current within specified levels.

(6)Charge and Discharge

Regular electrolytic capacitors are not suitable for rapid charging/discharging circuits. Such usage may either cause reduction in overall capacitance or damage due to overheating. Leon provides special assistance for selecting appropriate capacitors for rapid charging/discharging circuits.

(7)Surge Voltage

The Surge voltage rating is referred as the maximum DC overvoltage that may be applied to an electrolytic capacitor for a short time interval of 30 seconds at infrequent at infrequent time intervals not exceeding 5.5minutes with a limiting resistance of 1kΩ. Unless otherwise described on the catalogue or product specifications, please do not apply a voltage exceeding the capacitor's voltage rating. The rated surge voltages corresponding to rated voltages of electrolytic capacitors are presented as follows:

Rated Voltage(V)	4	6.3	10	16	25	35	50	63	80	100
Surge Voltage(V)	4.6	7.3	11.5	18.4	28.8	40.3	57.5	72.5	92	115
Rated Voltage(V)	160	200	250	315	350	400	420	450	500	525
Surge Voltage(V)	176	220	275	347	385	440	462	495	550	578

(8)Surge Voltage

The capacitor shall NOT be exposed to:

(a)Fluids including water, saltwater spray, oil, fumes, highly humid or condensed climates, etc.

(b)Ambient conditions containing hazardous gases/fumes like hydrogen sulfide, sulfurous acid, nitrous acid, chlorine or bromine gas, ammonia, tec.

(c)Exposed to ozone, ultraviolet rays and radiation.

(d)Severe vibrations or physical shocks that exceeds the specifications mentioned in this catalogue.

(9)Circuit Design Consideration

(a)Please ensure whether application, operating and mounting conditions satisfy the conditions specified in the catalog before installation of a capacitor. Please consult KNSCHA, if any of the conditions are beyond the conditions specified in the catalog.

(b)Heat-generating components or heat sinks should not be placed closer to Aluminum electrolytic capacitors on the PCB to avoid their premature failure. A cooling system is recommended to improve their reliable working.

(c)Electrical characteristics and performance of aluminum electrolytic capacitors are affected by variation of applied voltage, ripple current, ripple frequency and operating temperature. Therefore, these parameters shall not exceed specified values in the catalog.

(d)Aluminum capacitors may be connected in the parallel fashion for increasing total capacitance and/or for achieving higher ripple current capability. But, such design may cause unequal current flow through each of the capacitors due to differences in their impedances.

(e)When two or more capacitors are connected in series, voltage across each capacitor may differ and fall below the applied voltage. A resistor should be placed across each capacitor so as to match applied voltage with voltage across a capacitor.

(f)Please consult KNSCHA while selecting a capacitor for high- frequency switching circuit or a circuit that undergoes rapid charging/ discharging.

(g)Standard outer sleeve of the capacitor is not a perfect electrical insulator therefore is unsuitable for the applications that requires perfect electrical insulation. Please consult KNSCHA, if your application requires perfect electrical insulation.

(h)Tilting or twisting capacitor body is not recommended once it is soldered to the PCB.

2.Caution for Assembling Capacitors

(1)Mounting

(a)Aluminum electrolytic capacitors are not recommended to reuse in other circuits once they are mounted and powered in a circuit.

(b)Aluminum electrolytic capacitors may hold static charge between its anode and cathode, which is recommended to be discharged through a 1kΩ resistor before re-use.

(c)A long storage of capacitors may result into its insulation deterioration. This can lead to a high leakage current when voltage is applied that may damage the capacitor. Capacitors following a long storage period must undergo voltage treatment/re-forming.

Capacitors are charged by applying rated DC voltage through a resistor of 1kΩ in series at least for an hour. It is recommended to increase applied voltage gradually using a voltage regulator unit once capacitors are assembled on the board. The charging should be followed by discharging through a 1KΩ resistor.

(d)Please check capacitor rated voltage before mounting.

(e)Please check capacitor polarity before mounting.

(f)Please don't drop capacitor on the floor / hard object.

(g)Please don't deform the capacitor during installation.

(h)Please confirm whether the lead spacing of the capacitors match with its pad spacing / footprint on PCB prior to installation.

(i)Please avoid excessive mechanical shocks to capacitor during the auto-insertion process, inspection or centering operations.

Please don't place any wiring or circuit over the capacitor's pressure relief vent. The pressure relief vent may fail to open if adequate clearance space is not provided. Following table shows minimum clearance space required for different case diameters.

Case Diameter	φ6.3 ~ φ16	φ18 ~ φ35	φ40 or above
Clearance(mm)	2 mm	3 mm	5 mm

(2)Soldering

(a)Please confirm that soldering conditions, especially temperature and contact time are within our specifications. Dip or flow soldering temperature should be limited at 260 ± 5 ℃ for 10 ± 1 sec while manual soldering using soldering iron should be limited at 350 ± 5℃ for 3 +1/-0 seconds. Please do not dip capacitor body into molten solder. A capacitor's life will be negatively affected if these conditions are violated.

(b)Storage of capacitors in high humidity conditions is likely to affect the solder-ability of lead wires and terminals.

(c)Reflow soldering should NOLY be used for SMD type capacitors. The temperature and duration shall not exceed the specified temperature and duration in the specification. If the temperature or duration is higher than the value specified, please consult KNSCHA before usage.

(d)Standard aluminum electrolytic capacitors are not designed to withstand multiple reflow processes. Please consult KNSCHA if repeated reflowing is unavoidable.

(e)Incorrect mounting on PCB with improper external strength applied on its lead wires or capacitor body after soldering may damage a capacitor's internal structure, cause short circuit, or lead to high leakage current issues. Do not bend or twist the capacitor body after soldering. Referring to the drawings below only case (i) is recommended.

(i)Correct soldering

(ii)Hole-to-hole spacing on PCB differs from the lead space of lead wires.

(iii)Lead wires are bent after soldering.

(iv)Capacitor body doesn't stand vertical on PCB after soldering.

(3)Cleaning Circuit Boards after Soldering

(a)Following chemicals are not recommended for cleaning: Solvent containing halogen ions, Alkaline solvent, Xylene, Acetone, Terpene, petro-based solvent.

(b)Recommended cleaning conditions:

Fatty-alcohol - Pine Alpha ST-100S, Clean Through-750H and IPA (isopropyl alcohol) are examples of the most acceptable cleaning agents. Temperature of the cleaning agent must not exceed 60℃. Flux content in the cleaning agents should be limited to 2 Wt. %. Overall length of cleaning process (e.g., immersion, ultrasonic or other) shall be within 5 minutes (5 ~ 7mm height within 3 minutes). CFC substitute cleaning agents such as AK225AES can also be used for cleaning. In this case, its temperature shall not exceed 40 C and cleaning process (e.g., immersion, ultrasonic or other) shall be completed within 2 ~ 3 minutes. After cleaning capacitors should be dried with hot air for at least 10 minutes along with the PCB. Temperature of hot air shall not exceed maximum category temperature of

the capacitor. Insufficient drying may cause appearance defects, sleeve shrinkage, and bottom-plate bulging. However, usage of this CFC substitute must completely regulated for protection of environment.

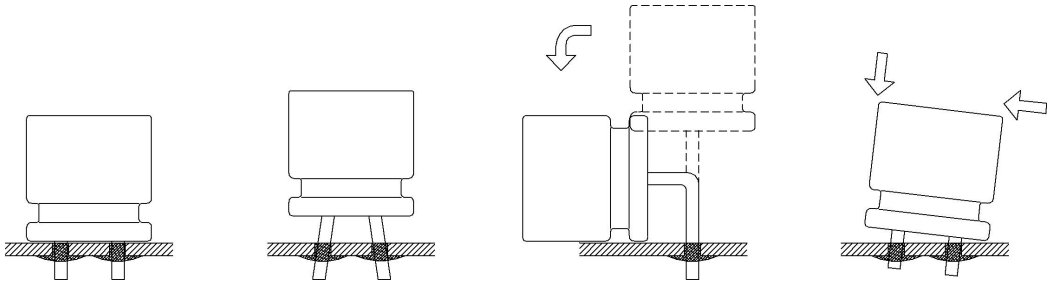

3.Maintenance Inspection

Periodical inspection of aluminum capacitors is absolutely necessary especially when they are used with industrial equipment. The following items should be checked:

(1)Appearance: Bloated, vent operated, leaked, etc.

(2)Electrical characteristic: Capacitance, Tan δ, leakage current, and other specified items listed in specification.

KNSCHA recommend replacing the capacitors if any of the abovementioned items fail to meet specifications.

4.Storage

(1)The most suitable conditions for aluminum capacitor storage are 5 ℃ ~ 35℃ and indoor relative humidity less than 75%. High temperature and/or humidity storage is detrimental to the capacitors.

(2)Capacitors shall not be stored in wet or damp atmospheres containing water, brine, fumes or oil.

(3)Capacitors storage area shall neither be exposed to hazardous gases such as hydrogen sulfide, sulfurous acid, nitrous acid, chlorine, ammonium, etc. nor to acidic or alkaline solutions.

(4)Capacitors shall not be exposed to ozone, ultraviolet rays or radiation.

5.Estimation of life time

$$L_r = L_0 \times 2^{\frac{T_{0max} - T_{r\,max}}{10}}$$

L_r : Estimated lifetime (hours)

L_0: Base lifetime specified at maximum operating temperature with applied the DC voltage and the ripple current (hours)

$T_{0\ max}$: The core temperature that rated ripple current applied at maximum operating temperature.

$T_{r\ max}$: The core temperature that applied actual ripple current at ambient temperature.

6.Maintenance Inspection

Please consult with a local industrial waste disposal specialist when disposing of aluminum electrolytic capacitors.

7.Environmental Consideration

KNSCHA already have received ISO 14000 certificate. Cadmium (Cd), Lead (Pb), Mercury (Hg), Hexavalent Chromium (Cr+6), PBB, PBDE, DEHP, BBP, DBP and DIBP have never been using in capacitor. If you need "Halogen-free" products, please consult with us.

For further details, please refer to the following industrial standards:

IEC 60384-4- Fixed capacitors for use in electronic equipment - Part 4: Sectional specification - Aluminum electrolytic capacitors with solid (MnO2) and non-solid electrolyte (Established in January 1995, Revised in March 2007)

EIAJ RCR-2367B- Guideline of notabilia for fixed aluminum electrolytic capacitors for use in electronic equipment [Technical Standardization Committee on Passive Components (Established in March 1995, Revised in March 2002)].