OSRAM GF PUBRA1.25

Datasheet

Discontinued

Published by ams-OSRAM AG
Tobelbader Strasse 30, 8141 Premstaetten, Austria
Phone +43 3136 500-0
ams-osram.com
© All rights reserved

OSRAM

OSCONIQ™ P 3737 (2W)

GF PUBRA1.25

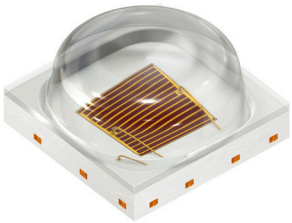

OSCONIQ™ P 3737 Batwing delivers exceptional light uniformity, enhanced brightness and long lifetime. Featuring a unique batwing radiation profile, it ensures wide-angle coverage with reduced hotspots, making it ideal for large-area horticultural lighting. Available in a range of targeted wavelengths, the P 3737 Batwing offers design flexibility and spectral precision to meet the dynamic needs of modern growers.

Applications

- Agriculture & horticulture
- Entertainment
- Indoor lighting
- Outdoor & industrial lighting

Features

- Package: SMD epoxy package with silicone lens
- ESD: 8 kV acc. to ANSI/ESDA/JEDEC JS-001 (HBM, Class 3B)
- Typ. Radiation: 140°
- Radiant Flux (@ 700mA): typ. 869 mW @ 85°C
- Radiant Efficiency (@ 700mA): typ. 72.9% @ 85°C
- Photon Flux (@ 700mA): typ. 5.32 µmol/s @ 85°C
- Photon Flux Efficacy (@ 700mA): typ. 4.47 µmol/J @ 85°C
- ThinFilm LED chip designed and manufactured in Germany

Discontinued

Ordering Information

Type	Luminous Flux [1)] I_F = 700 mA Φ_V	Ordering Code
GF PUBRA1.25-S7T3-1-1	4.95 ... 5.70 mlm	Q65115A0318

Discontinued

Maximum Ratings

Parameter	Symbol		Values
Operating Temperature	T_{op}	min. max.	-40 °C 125 °C
Storage Temperature	T_{stg}	min. max.	-40 °C 125 °C
Junction Temperature	T_j	max.	135 °C
Forward current	I_F	min. max.	100 mA 2800 mA
Surge Current t ≤ 10 µs; D = 0.005 ; T_J = 85 °C	I_{FS}	max.	3000 mA
Reverse voltage [2)]	V_R		Not designed for reverse operation
ESD withstand voltage acc. to ANSI/ESDA/JEDEC JS-001 (HBM, Class 3B)	V_{ESD}		8 kV

Discontinued

Characteristics

I_F = 700 mA; T_J = 85 °C

Parameter	Symbol		Values
Peak Wavelength	λ_{peak}	typ.	743 nm
Centroid Wavelength [3)] I_F = 700 mA	$\lambda_{centroid}$	min. typ. max.	720 nm 733 nm 750 nm
Spectral Bandwidth at 50% $I_{rel,max}$	$\Delta\lambda$	typ.	30 nm
Viewing angle at 50% I_V	2φ	typ.	140 °
Forward Voltage [4)] I_F = 700 mA	V_F	min. typ. max.	1.60 V 1.70 V 1.75 V
Reverse current [2)]	I_R		Not designed for reverse operation
Electrical thermal resistance junction/solderpoint with efficiency η_e = 72.9 %	$R_{thJS\ elec.}$	typ.	0.57 K / W

Discontinued

Brightness Groups

Group	Luminous Flux [1] I_F = 700 mA min. Φ_V	Luminous Flux [1] I_F = 700 mA max. Φ_V	PF/W typ.	Total Radiant Flux min. Φ_E	Total Radiant Flux max. Φ_E
S7	4.95 mlm	5.10 mlm	4.22 µmol/J	808 mW	832 mW
T1	5.10 mlm	5.30 mlm	4.37 µmol/J	832 mW	865 mW
T2	5.30 mlm	5.50 mlm	4.54 µmol/J	865 mW	898 mW
T3	5.50 mlm	5.70 mlm	4.70 µmol/J	898 mW	930 mW

Note: [*] Photon Flux includes wavelengths between 280 and 800 nm.
Note: [**] Radiant Flux values are for reference only.

Forward Voltage Groups

Group	Forward Voltage [4] I_F = 700 mA min. V_F	Forward Voltage [4] I_F = 700 mA max. V_F
A7	1.60 V	1.65 V
A8	1.65 V	1.70 V
A9	1.70 V	1.75 V

Centroid Wavelength

Group	Centroid Wavelength [3] I_F = 700 mA min. $\lambda_{centroid}$	Centroid Wavelength [3] I_F = 700 mA max. $\lambda_{centroid}$
1	720 nm	750 nm

Discontinued

Group Name on Label

Example: S7-1-A7

Brightness	Wavelength	Forward Voltage
S7	1	A7

Discontinued

Relative Spectral Emission [5)]

$I_{rel} = f(\lambda)$; $I_F = 700$ mA; $T_J = 85$ °C

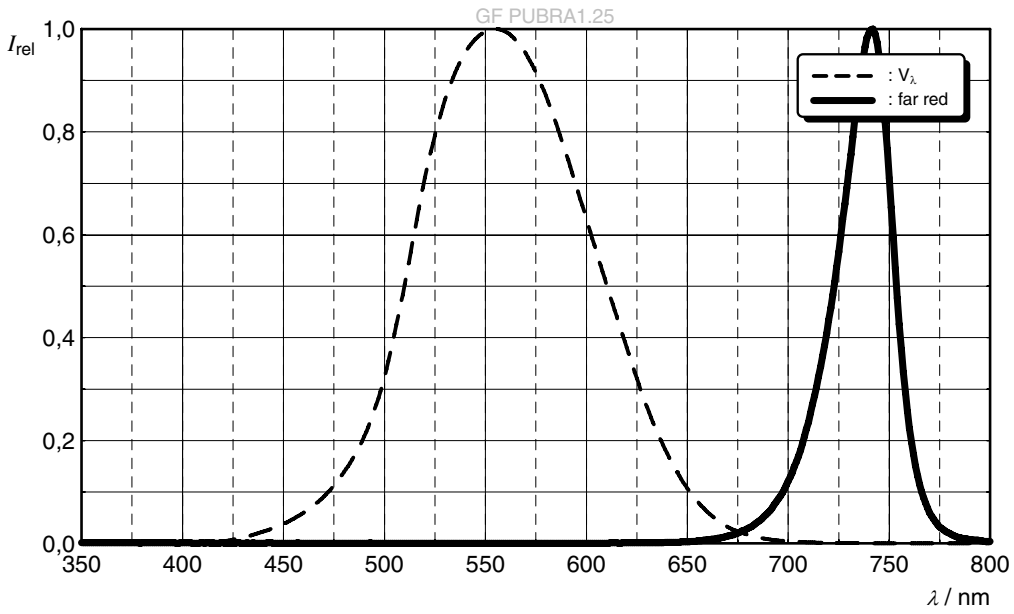

Radiation Characteristics [5)]

$I_{rel} = f(\varphi)$; $T_J = 85$ °C

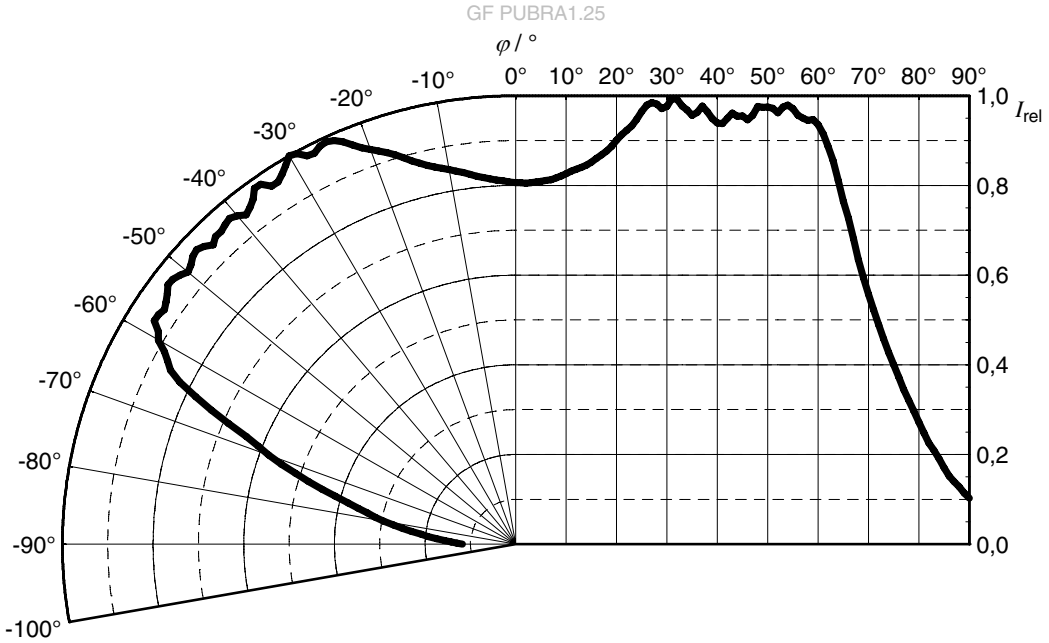

Discontinued

Forward current [5)]

$I_F = f(V_F)$; $T_J = 85$ °C

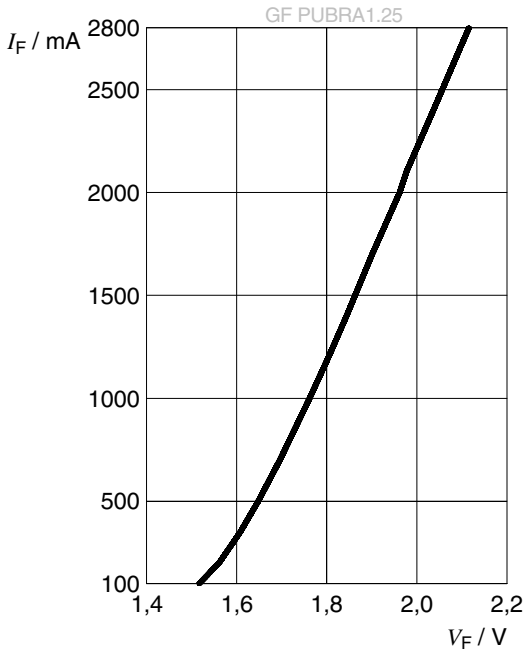

Relative Photon Flux [5), 6)]

$\Phi_P/\Phi_P(700\ mA) = f(I_F)$; $T_J = 85$ °C

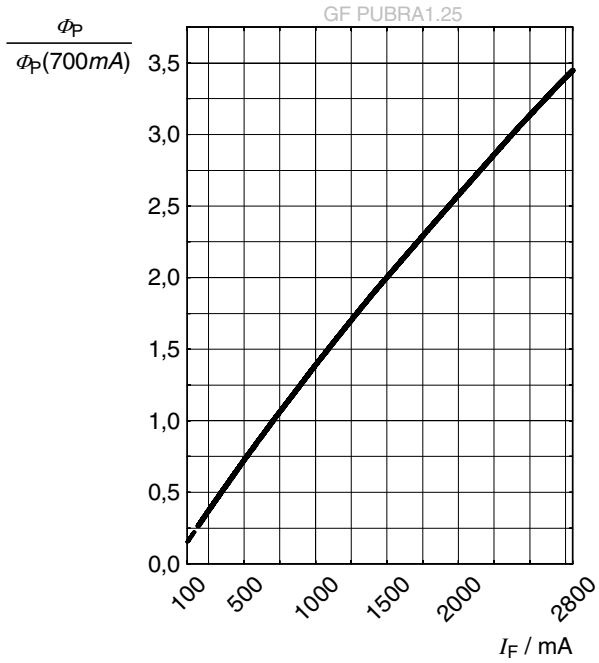

Discontinued

Forward Voltage [5)]

$\Delta V_F = V_F - V_F(85\ °C) = f(T_j)$; $I_F = 700$ mA

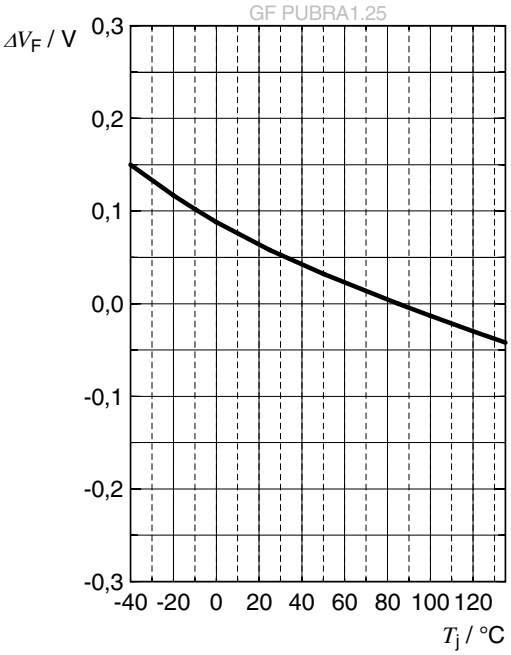

Relative Photon Flux [5)]

$\Phi_P/\Phi_P(85\ °C) = f(T_j)$; $I_F = 700$ mA

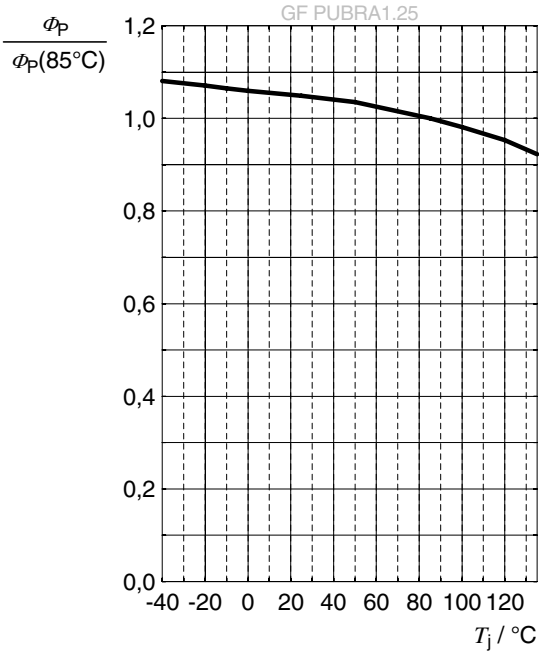

Centroid Wavelength [5)]

$\Delta\lambda_{centr} = \lambda_{centr} - \lambda_{centr}(85\ °C) = f(T_j)$; $I_F = 700$ mA

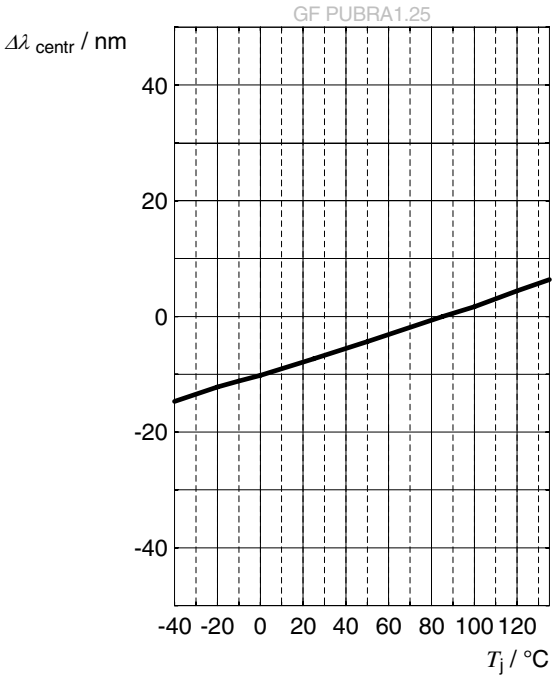

Discontinued

Max. Permissible Forward Current [7)]

$I_F = f(T)$

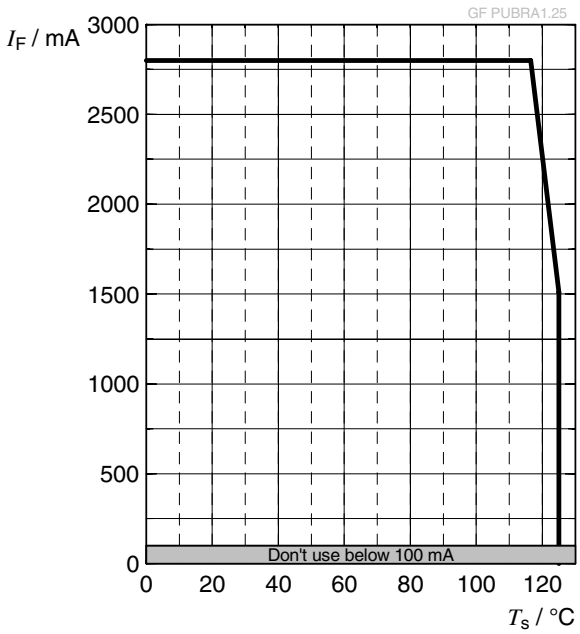

Discontinued

Dimensional Drawing [8)]

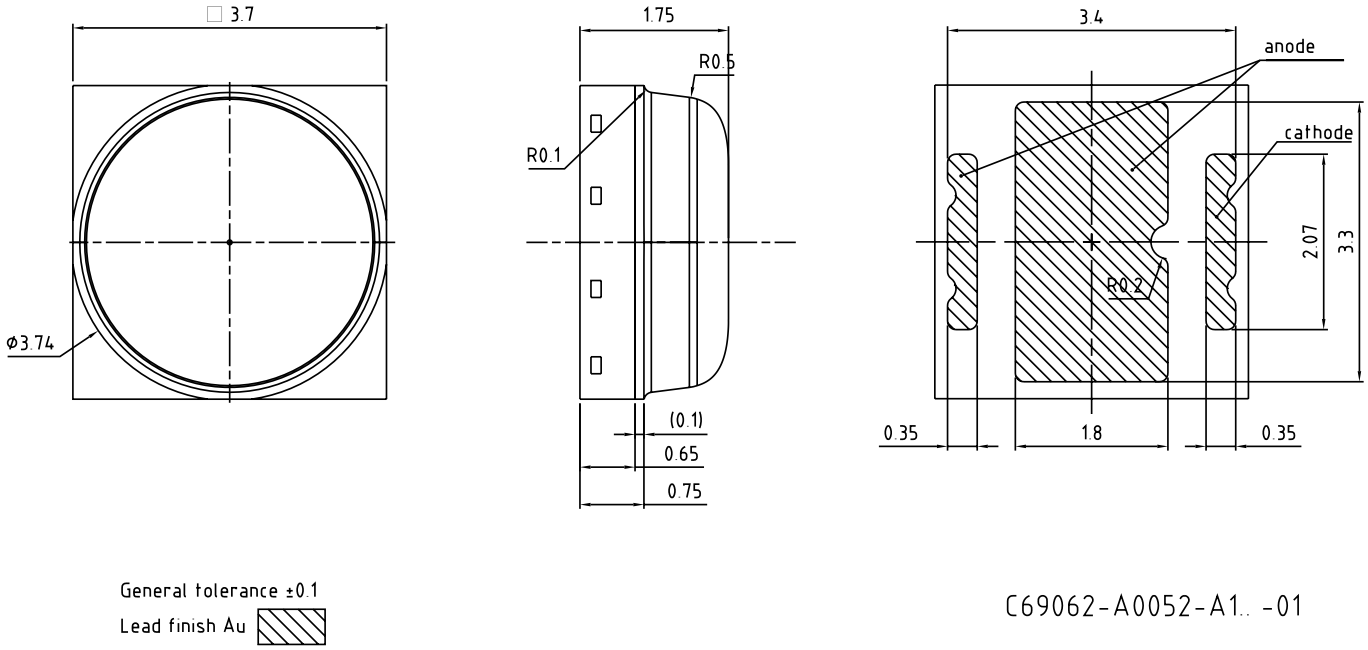

Further Information:

Approximate Weight: 46.0 mg

ESD advice: The device is protected by ESD device which is connected in parallel to the Chip.

Discontinued

Recommended Solder Pad [8)]

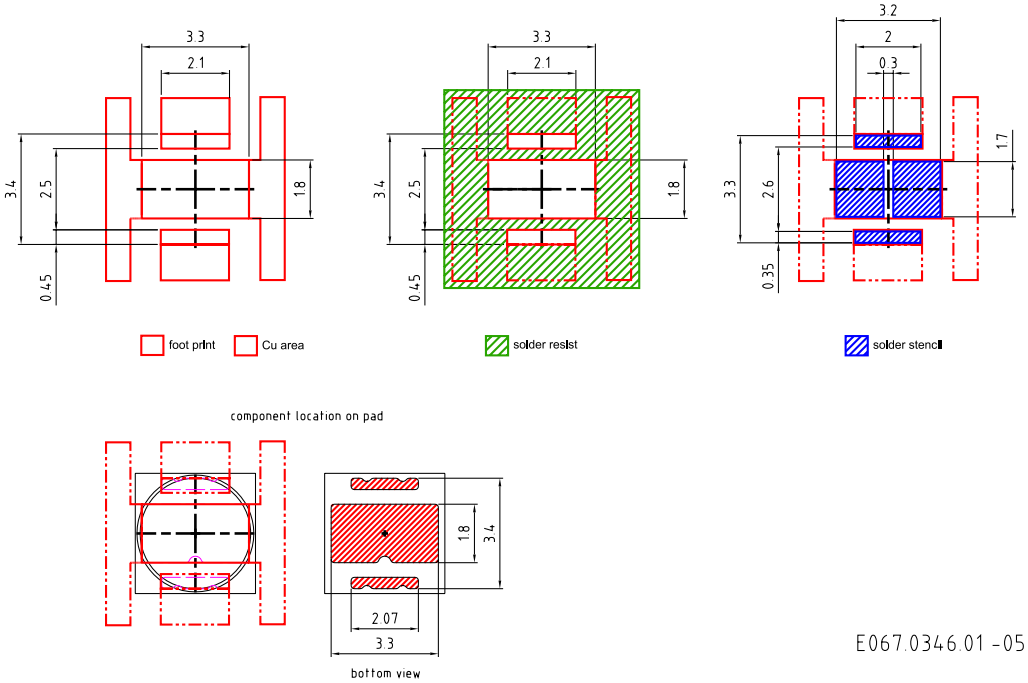

For superior solder joint connectivity results we recommend soldering under standard nitrogen atmosphere. Package not suitable for ultra sonic cleaning.

Discontinued

Reflow Soldering Profile

Product complies to MSL Level 2 acc. to JEDEC J-STD-020E

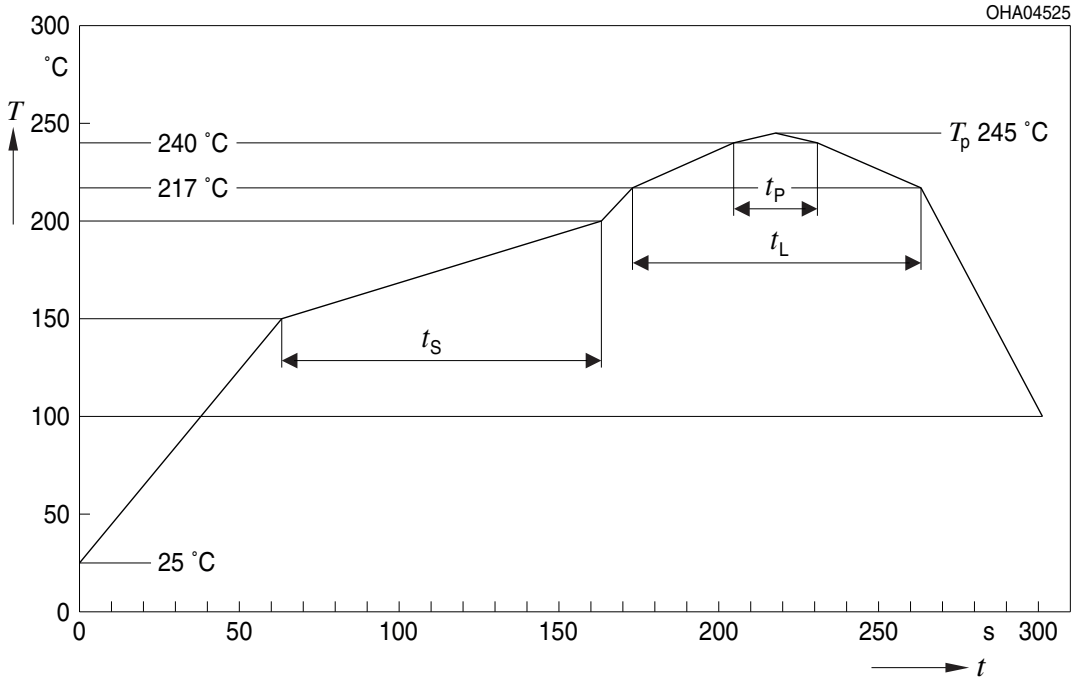

Profile Feature	Symbol	Pb-Free (SnAgCu) Assembly			Unit
		Minimum	Recommendation	Maximum	
Ramp-up rate to preheat*) 25 °C to 150 °C			2	3	K/s
Time t_S T_{Smin} to T_{Smax}	t_S	60	100	120	s
Ramp-up rate to peak*) T_{Smax} to T_P			2	3	K/s
Liquidus temperature	T_L		217		°C
Time above liquidus temperature	t_L		80	100	s
Peak temperature	T_P		245	260	°C
Time within 5 °C of the specified peak temperature T_P - 5 K	t_P	10	20	30	s
Ramp-down rate* T_P to 100 °C			3	6	K/s
Time 25 °C to T_P				480	s

All temperatures refer to the center of the package, measured on the top of the component
* slope calculation DT/Dt: Dt max. 5 s; fulfillment for the whole T-range

Discontinued

Taping [8)]

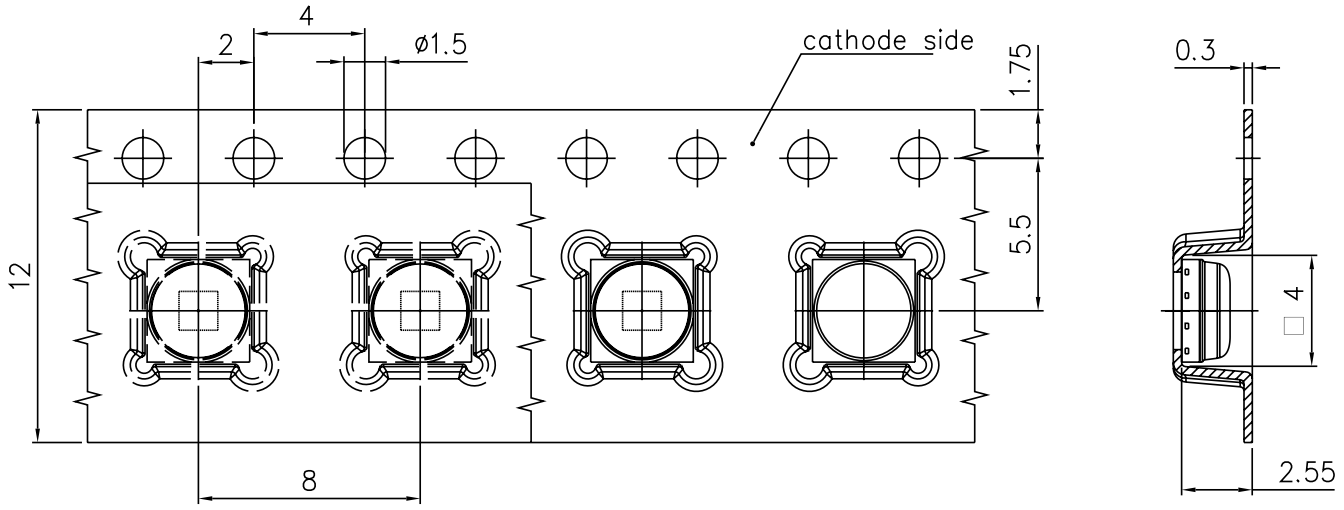

C69062-A0052-B7-02

Discontinued

Tape and Reel [9)]

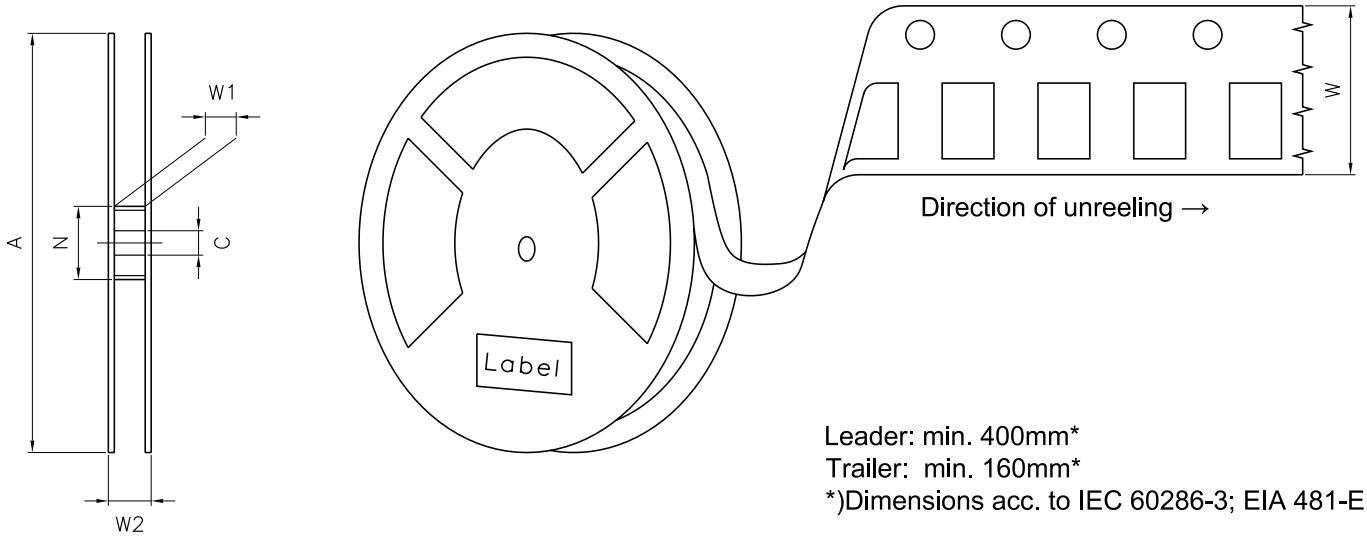

Leader: min. 400mm*
Trailer: min. 160mm*
*)Dimensions acc. to IEC 60286-3; EIA 481-E

Reel Dimensions

A	W	N_{min}	W_1	$W_{2\,max}$	Pieces per PU
330 mm	12 + 0.3 / - 0.1 mm	60 mm	12.4 + 2 mm	18.4 mm	3000

Discontinued

Barcode-Product-Label (BPL)

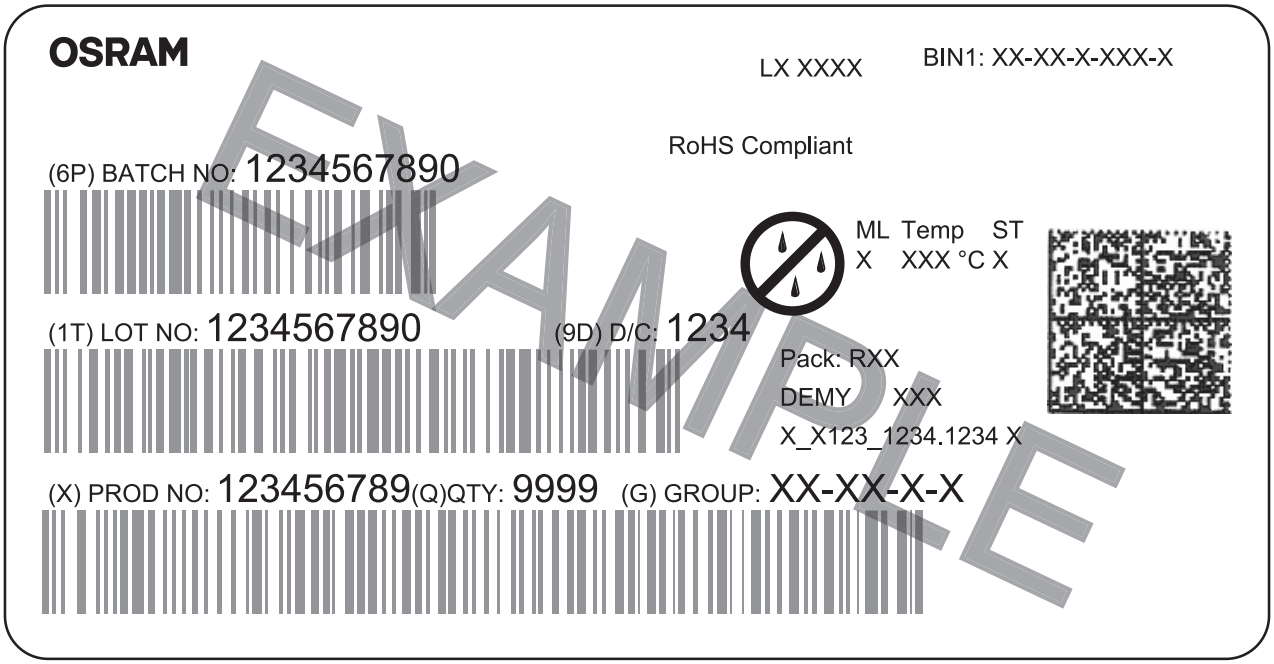

OHA04563

Dry Packing Process and Materials

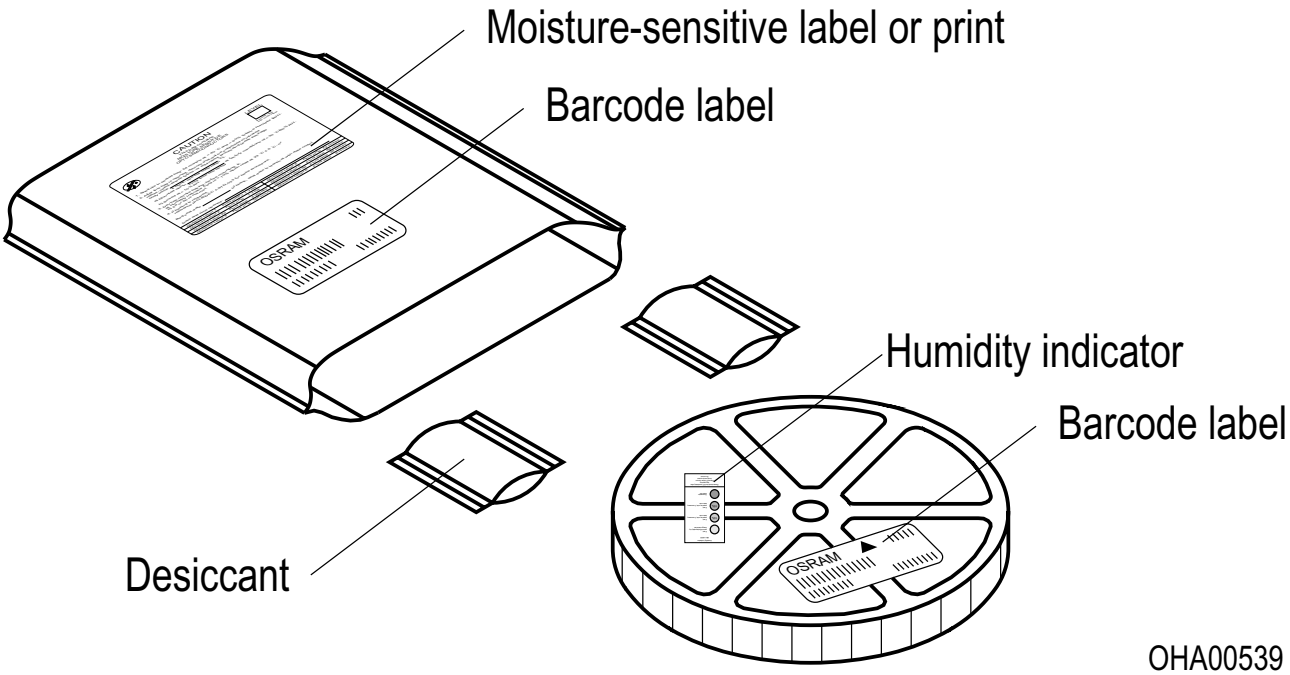

OHA00539

Moisture-sensitive product is packed in a dry bag containing desiccant and a humidity card according JEDEC-STD-033.

Discontinued

Notes

The evaluation of eye safety occurs according to the standard IEC 62471:2006 (photo biological safety of lamps and lamp systems). Within the risk grouping system of this IEC standard, the device specified in this data sheet fall into the class **exempt group (exposure time 10000 s)**. Under real circumstances (for exposure time, conditions of the eye pupils, observation distance), it is assumed that no endangerment to the eye exists from these devices. As a matter of principle, however, it should be mentioned that intense light sources have a high secondary exposure potential due to their blinding effect. When looking at bright light sources (e.g. headlights), temporary reduction in visual acuity and afterimages can occur, leading to irritation, annoyance, visual impairment, and even accidents, depending on the situation.

Subcomponents of this device contain, in addition to other substances, metal filled materials including silver. Metal filled materials can be affected by environments that contain traces of aggressive substances. Therefore, we recommend that customers minimize device exposure to aggressive substances during storage, production, and use. Devices that showed visible discoloration when tested using the described tests above did show no performance deviations within failure limits during the stated test duration. Respective failure limits are described in the IEC60810.

This device is designed for specific/recommended applications only. Please consult OSRAM Opto Semiconductors Sales Staff in advance for detailed information on other non-recommended applications (e.g. automotive).

Change management for this component is aligned with the requirements of the lighting market.

For further application related information please visit https://ams-osram.com/support/application-notes

Discontinued

Disclaimer

Attention please!

The information describes the type of component and shall not be considered as assured characteristics. Terms of delivery and rights to change design reserved. Due to technical requirements components may contain dangerous substances.
For information on the types in question please contact our Sales Organization.
If printed or downloaded, please find the latest version on our website.

Packing

Please use the recycling operators known to you. We can also help you – get in touch with your nearest sales office. By agreement we will take packing material back, if it is sorted. You must bear the costs of transport. For packing material that is returned to us unsorted or which we are not obliged to accept, we shall have to invoice you for any costs incurred.

Product and functional safety devices/applications or medical devices/applications

Our components are not developed, constructed or tested for the application as safety relevant component or for the application in medical devices.
Our products are not qualified at module and system level for such application.

In case buyer – or customer supplied by buyer – considers using our components in product safety devices/ applications or medical devices/applications, buyer and/or customer has to inform our local sales partner immediately and we and buyer and /or customer will analyze and coordinate the customer-specific request between us and buyer and/or customer.

Discontinued

Glossary

1) **Brightness:** Brightness values are measured during a current pulse of typically 10 ms, with a tolerance of +/- 7%.

2) **Reverse Operation:** Not designed for reverse operation. Continuous reverse operation can cause migration and damage of the device.

3) **Wavelength:** The wavelength is measured at a current pulse of typically 10 ms, with a tolerance of ± 0.5 nm.

4) **Forward Voltage:** The Forward voltage is measured during a current pulse duration of typically 1 ms with a tolerance of ± 0.05V .

5) **Typical Values:** Due to the special conditions of the manufacturing processes of semiconductor devices, the typical data or calculated correlations of technical parameters can only reflect statistical figures. These do not necessarily correspond to the actual parameters of each single product, which could differ from the typical data and calculated correlations or the typical characteristic line. If requested, e.g. because of technical improvements, these typ. data will be changed without any further notice.

6) **Characteristic curve:** In the range where the line of the graph is broken, you must expect higher differences between single devices within one packing unit.

7) **Thermal Resistance:** Rth max is based on statistic values (6σ) used for Derating.

8) **Tolerance of Measure:** Unless otherwise noted in drawing, tolerances are specified with ±0.1 and dimensions are specified in mm.

9) **Tape and Reel:** All dimensions and tolerances are specified acc. IEC 60286-3 and specified in mm.

Discontinued

Revision History

Version	Date	Change
1.0	2025-07-22	Initial Version
1.1	2026-02-03	Discontinued

Discontinued

Discontinued

EU RoHS and China RoHS compliant product
此产品符合欧盟 RoHS 指令的要求；
按照中国的相关法规和标准，
不含有毒有害物质或元素。

Published by ams-OSRAM AG
Tobelbader Strasse 30, 8141 Premstaetten, Austria
Phone +43 3136 500-0
ams-osram.com
© All rights reserved