S

NORA-W36 series

u-connectXpress dual-band Wi-Fi and Bluetooth® modules

Data sheet

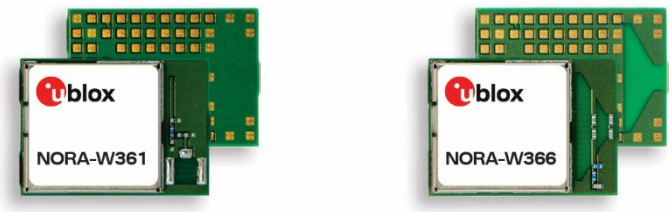

Abstract

Aimed towards developers and other technical staff, this document provides important information necessary for the design of customer applications based on the module. It includes an overview and comprehensive functional description of each NORA-W36 module variant – together with a detailed pin list, block diagram, mechanical and electrical specification, and more.

UBX-22021118 - R08
C1-Public

www.u-blox.com

Document information

Title	**NORA-W36 series**
Subtitle	u-connectXpress dual-band Wi-Fi and Bluetooth® modules
Document type	Data sheet
Document number	UBX-22021118
Revision and date	R08 13-May-2026
Disclosure restriction	C1-Public

Product status	Corresponding content status	
Functional sample	Draft	For functional testing. Revised and supplementary data will be published later.
In development / Prototype	Objective specification	Target values. Revised and supplementary data will be published later.
Engineering sample	Advance information	Data based on early testing. Revised and supplementary data will be published later.
Initial production	Early production information	Data from product verification. Revised and supplementary data may be published later.
Mass production / End of life	Production information	Document contains the final product specification.

This document applies to the following products:

Product name	Type number	Hardware version	IN/PCN reference	Product status
NORA-W361	NORA-W361-00B-00	03	N/A	Mass production
NORA-W366	NORA-W366-00B-00	03	N/A	Mass production
NORA-W361	NORA-W361-01B-00	03	N/A	Mass production
NORA-W366	NORA-W366-01B-00	03	N/A	Mass production

u-blox or third parties may hold intellectual property rights in the products, names, logos, and designs included in this document. Copying, reproduction, or modification of this document or any part thereof is only permitted with the express written permission of u-blox. Disclosure to third parties is permitted for clearly public documents only.
The information contained herein is provided “as is” and u-blox assumes no liability for its use. No warranty, either express or implied, is given, including but not limited to, with respect to the accuracy, correctness, reliability, and fitness for a particular purpose of the information. This document may be revised by u-blox at any time without notice. For the most recent documents and statuses, visit www.u-blox.com.
Copyright © u-blox AG.

Contents

Document information **2**
Contents **3**
1 Functional description **5**
1.1 Overview 5
1.2 Applications 5
1.3 Block diagram 6
1.4 Product variants 6
1.4.1 NORA-W361 6
1.4.2 NORA-W366 6
1.5 Radio performance 6
1.6 Software options 7
1.6.1 u-connectXpress software 7
1.6.2 AT command support 7
1.6.3 Software upgrade 8
1.7 MAC addresses 8
1.8 Power save modes 8
1.8.1 Wake-up sources 8
2 Interfaces **9**
2.1 Power supply 9
2.2 Low frequency clock 9
2.3 Module reset 9
2.4 System control signals 9
2.5 RF antenna interface 9
2.5.1 Internal antenna 9
2.5.2 External RF antenna interface 10
2.6 Data interfaces 10
2.6.1 UART 10
3 Pin definition **11**
3.1 NORA-W36 pin definition 11
3.1.1 NORA-W36 u-connectXpress pin assignments 11
4 Electrical specifications **14**
4.1 Absolute maximum ratings 14
4.1.1 ESD characteristics 14
4.2 Recommended operating conditions 14
4.2.1 Operating temperature 14
4.2.2 Supply / power pins 15
4.2.3 nRESET pin 15
4.2.4 Digital pins 15
4.2.5 Current consumption 16
4.2.6 Throughput performance 17

4.2.7 Wi-Fi radio characteristics....18
4.2.8 Bluetooth LE characteristics....19
4.2.9 Antenna radiation patterns....20
5 Mechanical specifications 22
5.1 NORA-W36 footprint dimensions 22
5.2 NORA-W36 mechanical specifications 23
5.2.1 NORA-W361 mechanical specifications....23
5.2.2 NORA-W366 mechanical specifications....23
6 Qualifications and approvals 24
6.1 Country approvals....24
6.2 Bluetooth qualification....24
6.3 Environmental 24
6.3.1 RoHS....24
6.3.2 REACH....24
6.4 Antennas 25
7 Product handling.... 26
7.1 Packaging 26
7.1.1 Reels 26
7.1.2 Tapes....26
7.2 Moisture sensitivity levels....27
7.3 Reflow soldering 27
7.4 ESD precautions....28
8 Labeling and ordering.... 29
8.1 Product labeling....29
8.2 Ordering information....29
Appendix 30
A Glossary 30
Related documentation 31
Revision history.... 31
Contact.... 31

1 Functional description

1.1 Overview

NORA-W36 series modules are small, stand-alone, dual-band Wi-Fi and Bluetooth® LE modules, ideal for integrating wireless connectivity into end products. They support Wi-Fi 4 (802.11a/b/g/n) in the 2.4 GHz and 5 GHz bands and can function as either a Wi-Fi station or an access point. NORA-W36 can also assume Bluetooth LE Peripheral and Central roles, or both simultaneously. It can operate as a GATT client or server.

Shipped with pre-flashed u-connectXpress software, NORA-W36 modules simplify end-product integration and reduce the time-to-market for end-user applications. The host controller configures and controls the wireless communication using high-level AT commands – without the need for expertise in Wi-Fi and Bluetooth protocols stacks.

The software comes with a TCP/IP stack that allows for both point-to-point as well as point-to-multipoint use cases.

For secure communication with cloud-based applications and services, NORA-W36 modules support TLS encryption and MQTT protocols. NORA-W36 offers secure authentication methods like WPA2/WPA3, Wi-Fi enterprise security, and Bluetooth LE secure connections. Many other supported features are accessible through the AT command interface.

The modules are suited to a wide range of applications, including industrial automation, smart buildings and homes, smart cities, metering and utilities, healthcare, and EV charging. NORA-W36 features an internal PCB antenna that offers a robust low-profile solution with high performance and an extensive range, whereas NORA-W361 is equipped with a module pin for connecting to an external antenna of choice. NORA-W36 modules are globally certified for use with the internal antenna or a variety of external antennas. This reduces the time, cost, and effort for customers seeking to include Wi-Fi and Bluetooth LE functionality into their designs.

NORA-W36 modules have the same size and position of critical pads and interfaces as other NORA modules. This provides maximum flexibility for developing similar end-devices with different radio technologies. The modules can operate in an extended temperature range of –40°C to +105°C and are qualified for professional grade applications.

1.2 Applications

NORA-W36 series are suitable for a wide range of applications, including:

- Wi-Fi networks
- Internet of Things (IoT)
- Bluetooth LE applications
- Metering and utilities
- Point-of-sales
- Healthcare
- Access to laptops, mobile phones, and similar consumer devices
- Smart buildings and homes
- EV charging

1.3 Block diagram

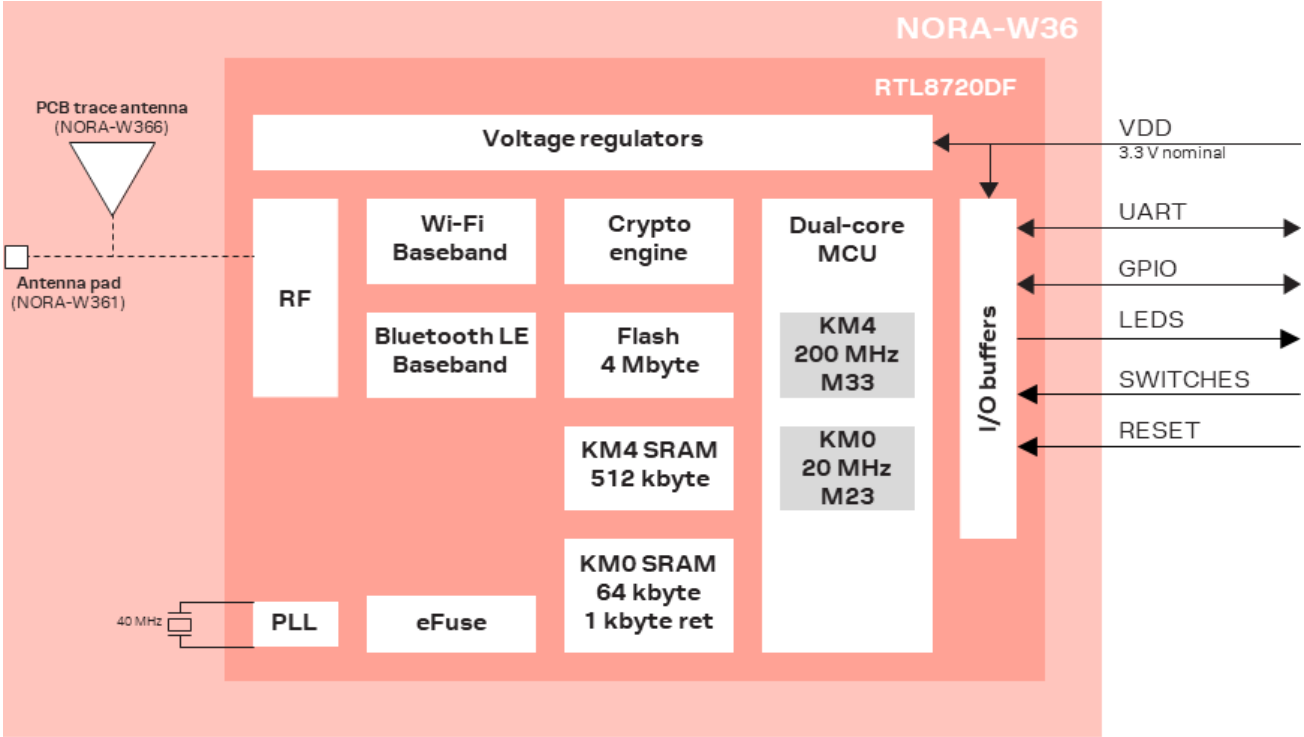

Figure 1: NORA-W36 series block diagram

1.4 Product variants

NORA-W36 series modules come with pre-flashed u-connectXpress software, which supports Wi-Fi 4 (802.11a/b/g/n) in the 2.4 GHz and 5 GHz bands and Bluetooth LE in the 2.4 GHz ISM band. NORA-W36 product variants share the same pin-out, footprint, and size of 14.3 mm x 10.4 mm x 1.9 mm.

1.4.1 NORA-W361

NORA-W361 has no internal antenna. The RF signal for routing to an external antenna or antenna connector signal is exposed through a dedicated module pin.

1.4.2 NORA-W366

NORA-W366 is equipped with an internal PCB trace antenna, using antenna technology licensed from Abracon. The RF signal is not connected to any module pin.

1.5 Radio performance

The radio provides support for Wi-Fi 4, IEEE 802.11a/b/g/n in the 2.4 GHz and 5 GHz ISM bands and Bluetooth LE communication in the 2.4 GHz ISM band, as shown in Table 1.

Wi-Fi	Bluetooth LE
IEEE 802.11a/b/g/n	Qualified against Bluetooth Core 5.3
Band support Station mode: 2.4 GHz, channels 1-13*, (14 Japan only)* 5 GHz, channels 36-165* Access Point mode: 2.4 GHz, channels 1-13* 5 GHz, channels 36-48, 149-165*	Band support 2.4 GHz, 40 channels

Wi-Fi	Bluetooth LE
Typical conducted output power: 2.4 GHz, 20 dBm* 5 GHz, 18 dBm*	Typical conducted output power 8 dBm (NORA-W366) 6.5 dBm (NORA-W361)
Typical radiated output power: 2.4 GHz, 25.3 EIRP** 5 GHz, 23.3 EIRP**	Typical radiated output power 11.8 dBm EIRP**
Conducted sensitivity 802.11b, –98 dBm (1 Mbps) 802.11g, –95 dBm (6 Mbps) 802.11a, –93 dBm (6 Mbps) 802.11n, –95 dBm (2.4GHz, MCS 0) 802.11n, –93 dBm (5GHz, MCS 0)	Conducted sensitivity LE1M, –101 dBm LE2M, –97 dBm
Data rates: IEEE 802.11a: 6 / 9 / 12 / 18 / 24 / 36 / 48 / 54 Mbps IEEE 802.11b: 1 / 2 / 5.5 / 11 Mbps IEEE 802.11g: 6 / 9 / 12 / 18 / 24 / 36 / 48 / 54 Mbps IEEE 802.11n: MCS 0-7, HT20 (6.5-150 Mbps), HT40[1]	Data rates: 1 / 2 Mbps

* Maximum support depends on the region and u-connectXpress software version

** RF power including maximum antenna gain (2.4GHz – 5.3 dBi, 5GHz – 5.3dBi)

Table 1: NORA-W36 series Wi-Fi and Bluetooth characteristics

1.6 Software options

1.6.1 u-connectXpress software

NORA-W36 series modules come with the pre-flashed u-connectXpress software with integrated TCP/IP and Bluetooth protocol stacks. The modules support Wi-Fi 4 (IEEE 802.11a/b/g/n) dual-band operation at both 2.4 GHz and 5 GHz – as well as Bluetooth LE.

For top-grade security, NORA-W36 modules offer secure boot functionality to ensure that the module boots up only with the original u-connectXpress software. For securer connection to the infrastructure, the modules also provide end-to-end security on the wireless link, which utilizes the latest WPA3 (802.11i) standard and enterprise security.

For secure communication with cloud-based applications and services, NORA-W36 supports TLS encryption and MQTT protocols. NORA-W36 includes secure authentication methods like WPA2/WPA3, Wi-Fi enterprise security, and Bluetooth LE secure connections.

1.6.2 AT command support

NORA-W36 series modules are configured and controlled using high-level AT commands over UART, which eliminates the need for expertise in Wi-Fi and Bluetooth protocols stacks. Users can utilize simple commands to establish communication with a TCP server, read characteristics from a remote GATT Bluetooth LE service, and perform other functions. See also the u-connectXpress AT commands manual [3].

[1] HT40 not available with u-connectXpress

1.6.3 Software upgrade

NORA-W36 u-connectXpress software incorporates a bootloader that facilitates module flashing over the UART interface. The file download process employs the standard XMODEM protocol.

For information about how to upgrade the software, see also the NORA-W36 series system integration manual [1].

1.7 MAC addresses

NORA-W36 series modules are assigned a block of four MAC addresses. The first Wi-Fi MAC address (base address) is encoded in the Data Matrix on the label. See also Product labeling.

MAC address	Assignment
Base address	Wi-Fi station
Base address + 1	Wi-Fi access point
Base address + 2	Bluetooth LE device address
Base address + 3	Unused

Figure 2: MAC addresses

1.8 Power save modes

NORA-W36 series modules are power efficient devices capable of operating in different power saving modes and configurations.

Mode	Description	Remarks
Active / No sleep	No power save functions enabled.	
Auto sleep[2]	The module autonomously enters and exits sleep mode when possible.	Connections can remain established. Power save level can be configured.
Deep sleep	Lowest power consumption. Radio is disabled.	The module requires wake up source from host.

Table 2: Power save modes

1.8.1 Wake-up sources

NORA-W36 can wake up from any sleep mode using the peripheral sources shown in Table 3.

Peripheral	Description	Remarks
GPIO_J9	Wake up from Deep sleep	Input signal. Active low.
UART	Wake up from Auto sleep	Activity on UART wake up the module.

Table 3: Wake-up sources

[2] Not available with u-connectXpress v1.0.0, supported in later versions

2 Interfaces

2.1 Power supply

The power for NORA-W36 is supplied through the **VDD** pins with a nominal voltage of 3.3 VDC . This input voltage is also the input/output (I/O) reference for interfacing with external circuitry.

⚠ The system power supply circuit must be able to support peak power. The current drawn from **VDD** can vary significantly based on Wi-Fi and Bluetooth LE power consumption profiles.

NORA-W36 series modules utilize an integrated voltage converter to transform and stabilize the supply voltage applied to the **VDD** pins. The voltage converter can operate in linear low drop-out mode (LDO) or switching power supply (SPS) mode. SPS is the default mode.

2.2 Low frequency clock

NORA-W36 series modules derive their internal low frequency clock from the main clock.

2.3 Module reset

An internal pull-up resistor sets **nRESET** high. To reset (reboot) the module hardware, drive this pin low using an open drain, open collector, or contact switch.

2.4 System control signals

The following input signals are used to control the system:

- **nRESET** is used to reset the system. See also Module reset.
- If both **SWITCH_1** and **SWITCH_2** are driven low during startup, the system enters bootloader mode.
- If both **SWITCH_1** and **SWITCH_2** are driven low during start up and held low for 10 seconds, the system exits bootloader mode and all settings are restored to their factory defaults.

2.5 RF antenna interface

The RF antenna interface of NORA-W36 modules supports Wi-Fi and Bluetooth LE on the same antenna. To allow switching between Bluetooth and Wi-Fi data, the different communication protocols are time divided on the antenna. Although communication using these different protocols is (more or less) transparent in the application, these protocols are never active in the module antenna at the same time.

NORA-W36 series modules support either an internal antenna (NORA-W366) or external antennas connected through a dedicated antenna pin (NORA-W361).

2.5.1 Internal antenna

NORA-W366 modules are supplied with internal dual-band PCB trace antennas. They are tuned for the 2.4 GHz and 5 GHz bands specifically and are designed for optimal performance in the modules.

For more information about antenna-related design, see also the NORA-W36 series system integration manual [1].

⚠ The **ANT** signal solder pin is not connected on the NORA-W366 module.

2.5.2 External RF antenna interface

The NORA-W361 module has an antenna signal (**ANT**) pin with a characteristic impedance of 50 Ω for use with an external antenna. The antenna signal supports both Tx and Rx.

For the U.FL reference design and the list of approved antennas, see the NORA-W36 series system integration manual [1].

2.6 Data interfaces

2.6.1 UART

The Universal Asynchronous Receiver Transmitter (UART) is an asynchronous serial interface consisting of up to four signals: transmit data (**UART_TXD**), receive data (**UART_RXD**), request-to-send (**UART_RTS**) handshake, and clear-to-send (**UART_CTS**) handshake. The handshake signals are optional but are recommended at higher speeds. Default port settings are 115200 bps, 8 data bits, no parity, 1 stop bit. Maximum baud rate is 4 Mbps.

3 Pin definition

3.1 NORA-W36 pin definition

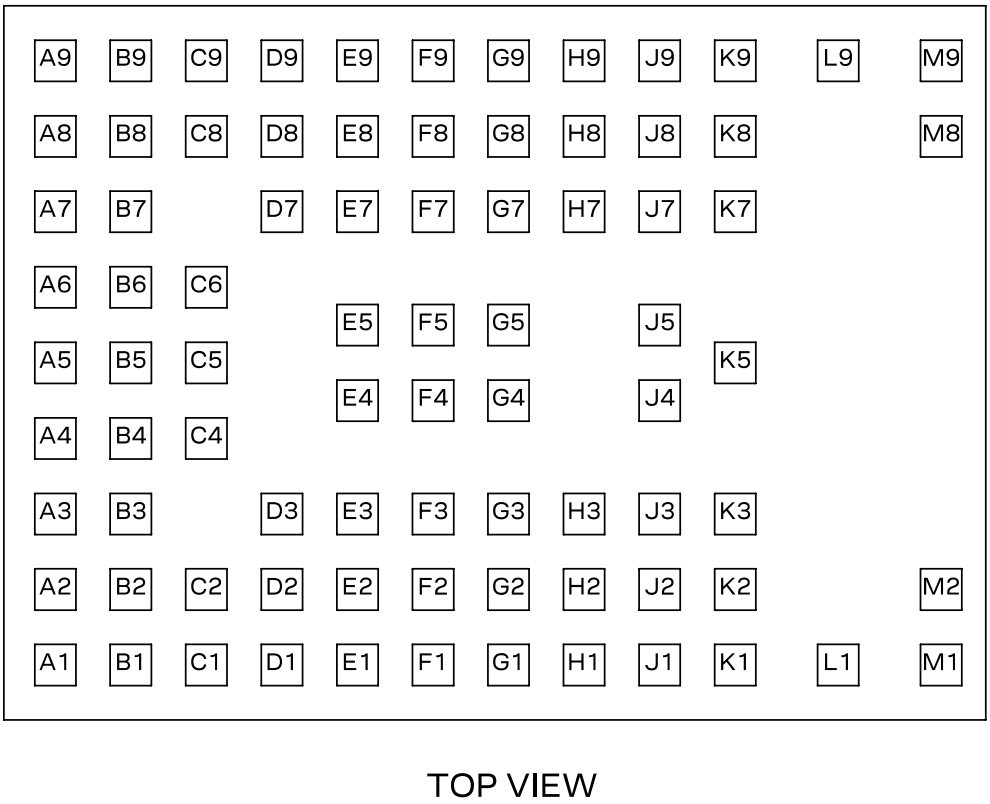

Figure 3: Pin layout

3.1.1 NORA-W36 u-connectXpress pin assignments

Table 4 shows the NORA-W36 u-connectXpress module pin assignments.

No	Name	I/O	Description	Remarks
A1	VSS	Power	Ground pad	
A2	n/c	-	No connection	
A3	n/c	-	No connection	
A4	n/c	-	No connection	
A5	DBG_TX	O	Debug UART TX data	
A6	RSVD_A6	I	Reserved – do not connect	
A7	VDD	Power	3.0 VDC to 3.6 VDC power supply input and I/O reference voltage	
A8	VDD	Power	3.0 VDC to 3.6 VDC power supply input and I/O reference voltage	
A9	VSS	Power	Ground pad	
B1	RSVD_B1	I	Reserved – do not connect	
B2	VSS	Power	Ground pad	
B3	RSVD_B3	O	Reserved – do not connect	
B4	n/c	-	No connection	

No	Name	I/O	Description	Remarks
B5	n/c	-	No connection	
B6	n/c	-	No connection	
B7	VDD	Power	3.0 VDC to 3.6 VDC power supply input and I/O reference voltage	
B8	VSS	Power	Ground pad	
B9	n/c	-	No connection	
C1	RSVD_C1	O	Reserved – do not connect	
C2	RSVD_C2	I	Reserved – do not connect	
C4	n/c	-	No connection	
C5	n/c	-	No connection	
C6	n/c	-	No connection	
C8	SWITCH_2	I	Switch 2	Internally pulled high, 50 KΩ
C9	n/c	-	No connection	
D1	n/c	-	No connection	
D2	n/c	-	No connection	
D3	n/c	-	No connection	
D7	n/c	-	No connection	
D8	SWITCH_1	I	Switch 1	Internally pulled high, 50 KΩ
D9	n/c	-	No connection	
E1	n/c	-	No connection	
E2	n/c	-	No connection	
E3	n/c	-	No connection	
E4	VSS	Power	Ground pad	
E5	VSS	Power	Ground pad	
E7	n/c	-	No connection	
E8	GPIO_E8	I/O	GPIO[3]	Output only when configured for WAKE_HOST function
E9	GPIO_E9	I/O	GPIO[3]	
F1	n/c	-	No connection	
F2	n/c	-	No connection	
F3	n/c	-	No connection	
F4	VSS	Power	Ground pad	
F5	VSS	Power	Ground pad	
F7	n/c	-	No connection	
F8	UART_RTS	O	UART_RTS	
F9	UART_CTS	I	UART_CTS	
G1	n/c	-	No connection	
G2	n/c	-	No connection	
G3	n/c	-	No connection	
G4	n/c	-	No connection	
G5	n/c	-	No connection	
G7	n/c	-	No connection	
G8	UART_TXD	O	UART_TXD	
G9	UART_RXD	I	UART_RXD	

[3] GPIO and WAKE_HOST not yet supported

No	Name	I/O	Description	Remarks
H1	n/c	-	No connection	
H2	RSVD_H2	I/O	Reserved – do not connect	
H3	n/c	-	No connection	
H7	n/c	-	No connection	
H8	GREEN	O	Green LED	Active low
H9	BLUE	O	Blue LED	Active low
J1	n/c	-	No connection	
J2	RSVD_J2	O	Reserved – do not connect	
J3	nRESET	I	External system reset input	Internally pulled high, 10 KΩ
J4	n/c	-	No connection	
J5	n/c	-	No connection	
J7	n/c	-	No connection	
J8	RED	O	Red LED	Active low
J9	GPIO_J9	I/O	WAKE_UP from deep sleep	Input only when configured for WAKE_UP
K1	n/c	-	No connection	
K2	VSS	Power	Ground pad	
K3	VSS	Power	Ground pad	
K5	VSS	Power	Ground pad	
K7	VSS	Power	Ground pad	
K8	VSS	Power	Ground pad	
K9	ANT	I/O	Single-ended antenna connection Only connected on NORA-W361	
L1	VSS	Power	Ground pad	
L9	VSS	Power	Ground pad	
M1	VSS	Power	Ground pad	
M2	VSS	Power	Ground pad	
M8	VSS	Power	Ground pad	
M9	VSS	Power	Ground pad	

Table 4: NORA-W36 u-connectXpress pinout

4 Electrical specifications

Stressing the device above one or more of the ratings listed in the Absolute maximum ratings can cause permanent damage. These are stress ratings only.

Operating the module at these or at any conditions other than those specified in the Recommended operating conditions should be avoided. Exposure to absolute maximum rating conditions for extended periods can affect device reliability.

☞ All given application information is only advisory and does not form part of the specification.

4.1 Absolute maximum ratings

Symbol	Description	Condition	Min	Max	Unit
VDD	Module supply voltage	Input DC voltage at VDD pins	-0.3	3.63	V DC
$I_{VDD\ MAX}$	Absolute maximum current consumption[4]	3.3 VDC power supply		800	mA
T_{STR}	Storage temperature		-40	+105	°C

Table 5: Absolute maximum ratings

⚠ The product is not protected against overvoltage or reversed voltages. Any voltage spikes that exceed the power supply voltage specification shown in Table 5 must be limited to values within the specified boundaries. Use the appropriate protection devices to suppress the potential damage caused by such spikes.

4.1.1 ESD characteristics

Parameter	Min.	Typical	Max.	Unit	Remarks
Human body model (HBM)			±2000	V	JEDEC EIA/JESD22-A114
Charge device model (CDM)			±500	V	JEDED EIA/JESD22-C101

Table 6: ESD characteristics

4.2 Recommended operating conditions

⚠ Operation beyond the specified operating conditions is not recommended and extended exposure beyond them can adversely affect the reliability of the device.

☞ Unless otherwise specified, all operating condition specifications are at an ambient temperature of 25 °C and at a supply voltage of 3.3 V.

4.2.1 Operating temperature

Parameter	Min.	Max.	Unit
Operating temperature	-40	+105	°C

Table 7: Temperature range

[4] 800 mA @ 40 µsec during WLAN channel enable and change.

4.2.2 Supply / power pins

The input supply can operate at a nominal input voltage of 3.3 VDC.

Symbol	Parameter	Condition	Min	Typ	Max	Unit
VDD	Input supply voltage	Ambient temperature, 40 °C to +105 °C	3.00	3.30	3.60	V
t_{PRDY}	VDD ramp up to 1.76 VDC		0.1	0.6	4.6	ms
t_{CORE}	Internal MCU core power ready			15		ms

Table 8: Input characteristics of voltage supply pins

4.2.3 nRESET pin

Pin name	Parameter	Min	Typ	Max	Unit
nRESET	Low-level input	0		0.2*VDD	V
	Internal pull-up resistance		10		kΩ
$t_{STARTUP}$	Startup time after release of reset		2.3 (default settings) 1.9 (Bluetooth disabled)		sec
t_{RESET}	Minimum **nRESET** low pulse	1	1		ms

Table 9: nRESET pin characteristics

4.2.4 Digital pins

Digital pin specifications depend on the power supply voltage, **VDD**.

Pin name	Parameter	Min	Typ	Max	Unit	Remarks
Any digital pin	Input characteristic: Low-level input	0		0.8	V	
	Input characteristic: high-level input	2.0		VDD	V	
	Output characteristic: Low-level output	0		0.4	V	
	Output characteristic: High-level output	2.4		VDD	V	
	Drive capability	3.6		23.3	mA	
	External loading capacitance			15	pF	
	Pull-up/pull-down resistance	4.7		50	kΩ	Pull up/down value set by application

Table 10: Digital pin characteristics at VDD=3.3 VDC

4.2.5 Current consumption

The typical current consumption of a NORA-W36 module is shown in Table 11. The current consumption is highly dependent on the application implementation. Measurements are taken at 115200 baud rate, 25 °C with a 3.3 V supply, using u-connectXpress v1.2.0.

Radio mode	Role	Activity		No sleep (PSL=0)	Auto sleep (PSL=1)	Unit
Off		System Idle	Avg. current	19.5	0.46	mA
Off		CPU in deep sleep	Avg. current	8	-	µA
Wi-Fi	STA	Wi-Fi not connected	Avg. current	20	0.47	mA
		Wi-Fi passive scan	Avg. current	59	63	mA
		Wi-Fi active scan	Avg. current	59	68	mA
		Wi-Fi connected (idle)	Avg. current	26	3.6	mA
		Wi-Fi transmitting (10 bytes)	Avg. current	43	42	mA
			Avg. duration	550	560	ms
		Wi-Fi transmitting (1k bytes)	Avg. current	40	39	mA
			Avg. duration	710	720	ms
		Wi-Fi receiving (10 bytes)	Avg. current	37	32	mA
			Avg. duration	750	760	ms
		Wi-Fi receiving (1k bytes)	Avg. current	37	32	mA
			Avg. duration	824	830	ms
	AP	Wi-Fi no connections	Avg. current	20	0.46	mA
		Wi-Fi connected (idle)	Avg. current	59	53	mA
		Wi-Fi transmitting (10 bytes)	Avg. current	59	59	mA
			Avg. duration	639	692	ms
		Wi-Fi transmitting (1k bytes)	Avg. current	59	59	mA
			Avg. duration	648	706	ms
		Wi-Fi receiving (10 bytes)	Avg. current	59	59	mA
			Avg. duration	630	693	ms
		Wi-Fi receiving (1k bytes)	Avg. current	59	59	mA
			Avg. duration	742	756	ms
Bluetooth LE	Central	Bluetooth idle	Avg. current	57	57	mA
		Bluetooth scan	Avg. current	58	58	mA
		Bluetooth connected (idle)	Avg. current	58	58	mA
		Bluetooth transmit (10 bytes)	Avg. current	61	61	mA
			Avg. duration	165	165	ms
		Bluetooth transmit (1k bytes)	Avg. current	59	58	mA
			Avg. duration	264	267	ms
	Peripheral	Bluetooth idle	Avg. current	57	57	mA
		Bluetooth advertising	Avg. current	58	58	mA
		Bluetooth connected (idle)	Avg. current	58	58	mA
		Bluetooth transmit (10 bytes)	Avg. current	61	61	mA
			Avg. duration	155	155	ms
		Bluetooth transmit (1k bytes)	Avg. current	59	59	mA
			Avg. duration	300	300	ms

Table 11: Typical current consumption

4.2.6 Throughput performance

The throughput shown in Table 12 was measured in a conducted setup using u-connectXpress version 1.0.0.

For descriptions of the different transfer modes, see the NORA-W36 system integration manual [1].

Radio mode	Transfer mode	Direction	Baud rate	Throughput	Protocol	Remarks
Wi-Fi	Transparent	UL	4 Mbps	2.5 Mbps	TCP	2.4 GHz and 5 GHz
	Transparent	DL	4 Mbps	2.5 Mbps	TCP	2.4 GHz and 5 GHz
	AT	UL	4 Mbps	1 Mbps	TCP	2.4 GHz and 5 GHz, binary
	AT (direct)	DL	4 Mbps	0.9 Mbps	TCP	2.4 GHz and 5 GHz, binary
	AT (buffered)	DL	4 Mbps	0.9 Mbps	TCP	2.4 and 5 GHz, binary
Bluetooth LE	Transparent	UL/DL	4 Mbps	400 kbps	SPS	Central or peripheral LE1M PHY
	Transparent	UL/DL	4 Mbps	400 kbps	SPS	Central or peripheral LE2M PHY

Table 12: Throughput performance

4.2.7 Wi-Fi radio characteristics

V_{DD} = 3.3 V, T_{amb} = 25 °C

Parameter	Operation mode		Specification	Unit
RF frequency range	802.11a/n		5.180 – 5.825	GHz
	802.11b/g/n		2.412 – 2.472	GHz
	802.11b/g/n (Japan only)		2.412 – 2.484	GHz
Modulation	802.11b		CCK and DSSS	
	802.11a/g/n		OFDM	
Supported Data Rates	802.11a		6, 9, 12, 18, 24, 36, 48, 54	Mbit/s
	802.11b		1, 2, 5.5, 11	Mbit/s
	802.11g		6, 9, 12, 18, 24, 36, 48, 54	Mbit/s
	802.11n		MCS0 – MCS7	
Supported Bandwidth	802.11n		20, 40	MHz
Supported Guard Interval	802.11n		400, 800	ns
Conducted Transmit Power (typical)	2.4 GHz CCK	1 Mbit/s	20	dBm*
		11 Mbit/s	18	dBm*
	2.4 GHz OFDM	6 Mbit/s	19	dBm*
		54 Mbit/s	17	dBm*
	2.4 GHz HT20 / HT40[5]	MCS0	18	dBm*
		MCS7	16	dBm*
	5 GHz OFDM	6 Mbit/s	18	dBm*
		54 Mbit/s	14	dBm*
	5 GHz HT20 / HT40[5]	MCS0	16	dBm*
		MCS7	13	dBm*
Receiver Sensitivity (typical)	2.4 GHz CCK	1 Mbit/s	–98	dBm
		11 Mbit/s	–91	dBm
	2.4 GHz OFDM	6 Mbit/s	–95	dBm
		54 Mbit/s	–77	dBm
	2.4 GHz HT20	MCS0	–95	dBm
		MCS7	–75	dBm
	2.4 GHz HT40[5]	MCS0	–93	dBm
		MCS7	–72	dBm
	5 GHz OFDM	6 Mbit/s	–93	dBm
		54 Mbit/s	–76	dBm
	5GHz HT20	MCS0	–93	dBm
		MCS7	–74	dBm
	5 GHz HT40[5]	MCS0	–91	dBm
		MCS7	–71	dBm

* There is lower output power on band edge channels and certain regulatory domains.

Table 13: Wi-Fi radio characteristics

[5] HT40 not available with u-connectXpress

4.2.8 Bluetooth LE characteristics

V_{DD} = 3.3 V, T_{amb} = 25 °C

Parameter	Specification	Unit
RF Frequency Range	2.402 – 2.480	GHz
Supported Modes	Bluetooth LE	
Number of channels	40	
Modulation	GFSK	
Transmit Power (typical, conducted)	NORA-W361: 6.5 ± 1 NORA-W366: 8 ± 1	dBm
Receiver Sensitivity (typical, conducted)	-101 ± 2	dBm

Table 14: Bluetooth LE characteristics

4.2.9 Antenna radiation patterns

Antenna patterns for approved antennas associated with NORA-W361 can be found in the respective antenna data sheet. See the NORA-W36 system integration manual [1] for the list of approved antennas.

Table 15 and Table 16 show radiation patterns for NORA-W366.

2.4 GHz antenna radiation patterns	
X-Y plane, Z out of page	X-Y plane, Z into page
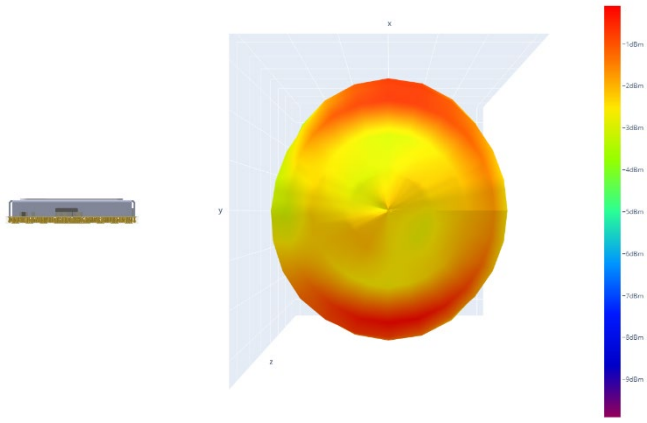	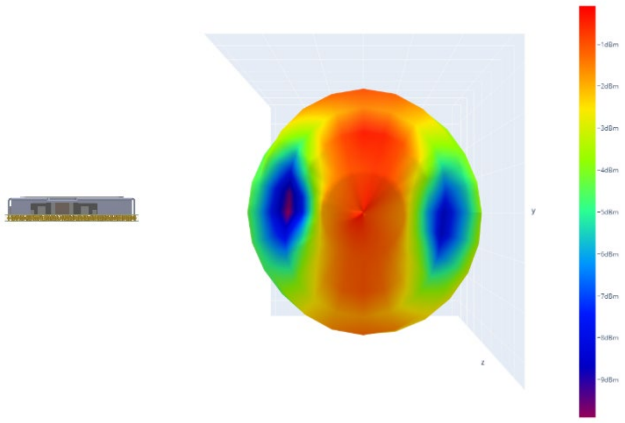
X-Z plane, Y out of page	X-Z plane, Y into page
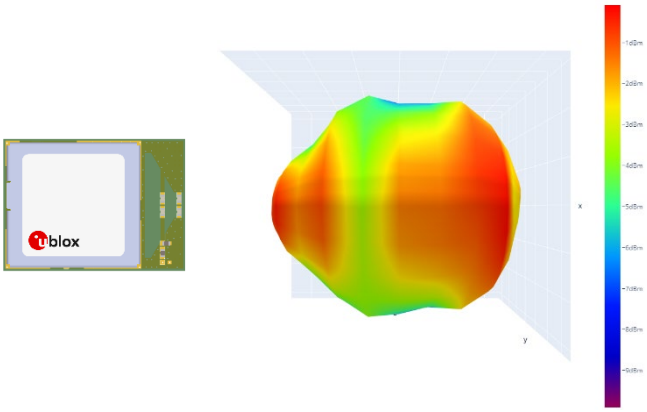	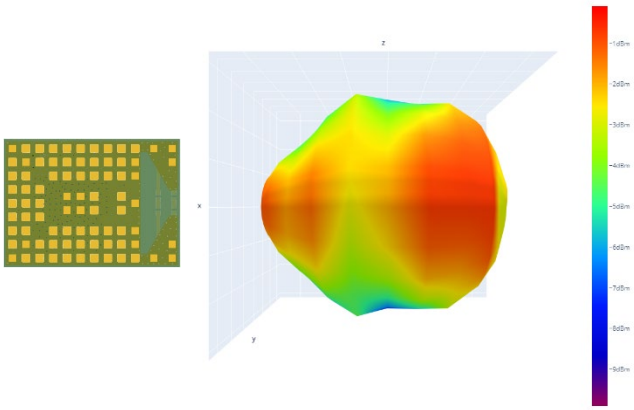
Y-Z plane, X out of page	Y-Z plane, X into page
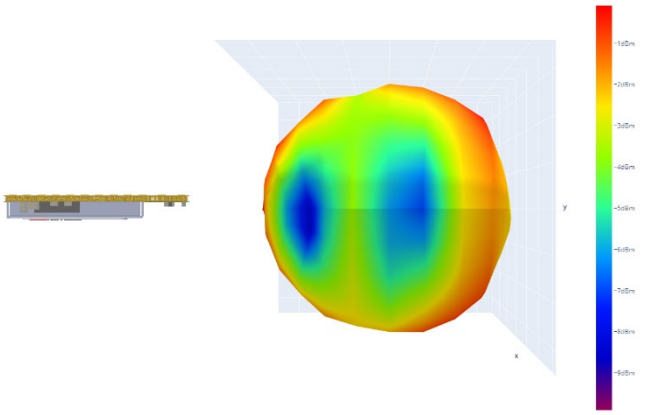	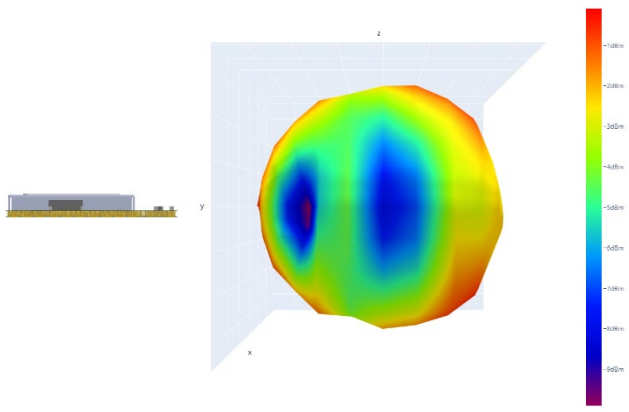

Table 15: NORA-W366 Wi-Fi and Bluetooth antenna characteristics in the 2.4 GHz band

5 GHz antenna radiation patterns	
X-Y plane, Z out of page	X-Y plane, Z into page
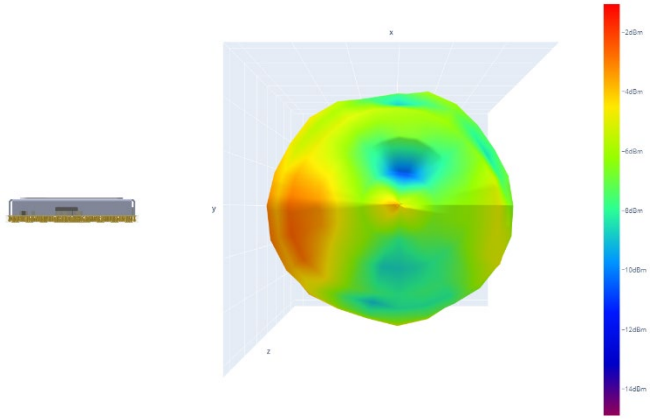	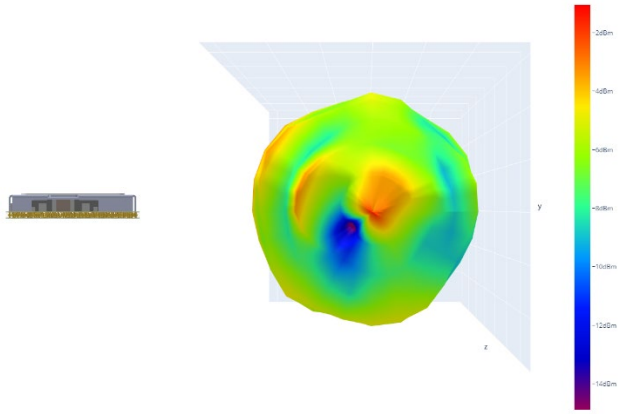
X-Z plane, Y out of page	X-Z plane, Y into page
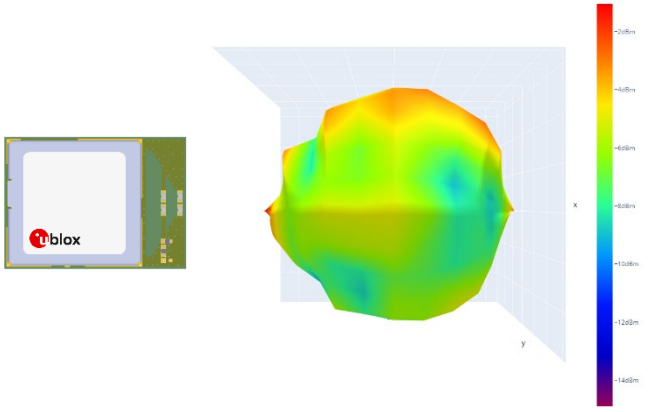	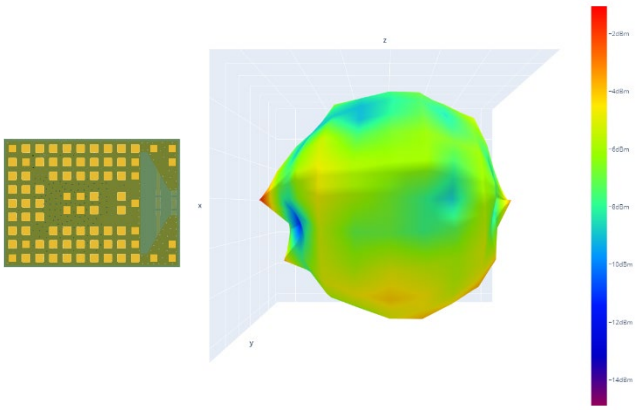
Y-Z plane, X out of page	Y-Z plane, X into page
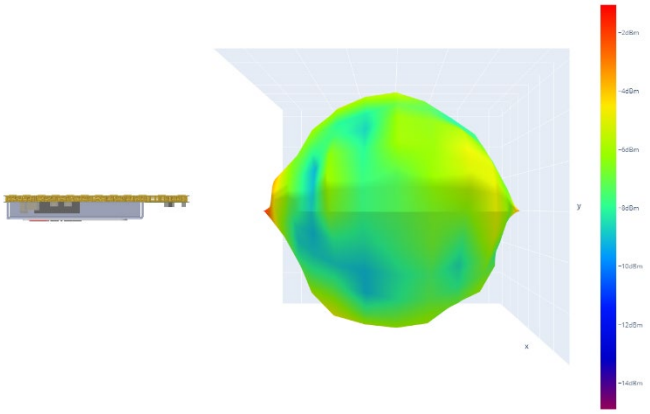	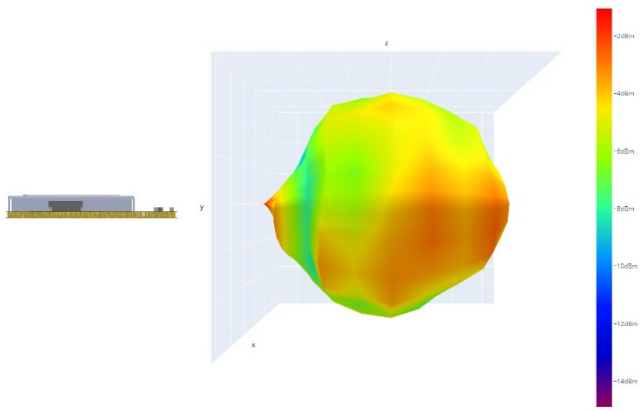

Table 16: NORA-W366 Wi-Fi antenna characteristics in the 5 GHz band

5 Mechanical specifications

5.1 NORA-W36 footprint dimensions

Figure 4 shows the common footprint and dimensions shared by NORA-W36 series modules across the whole product family.

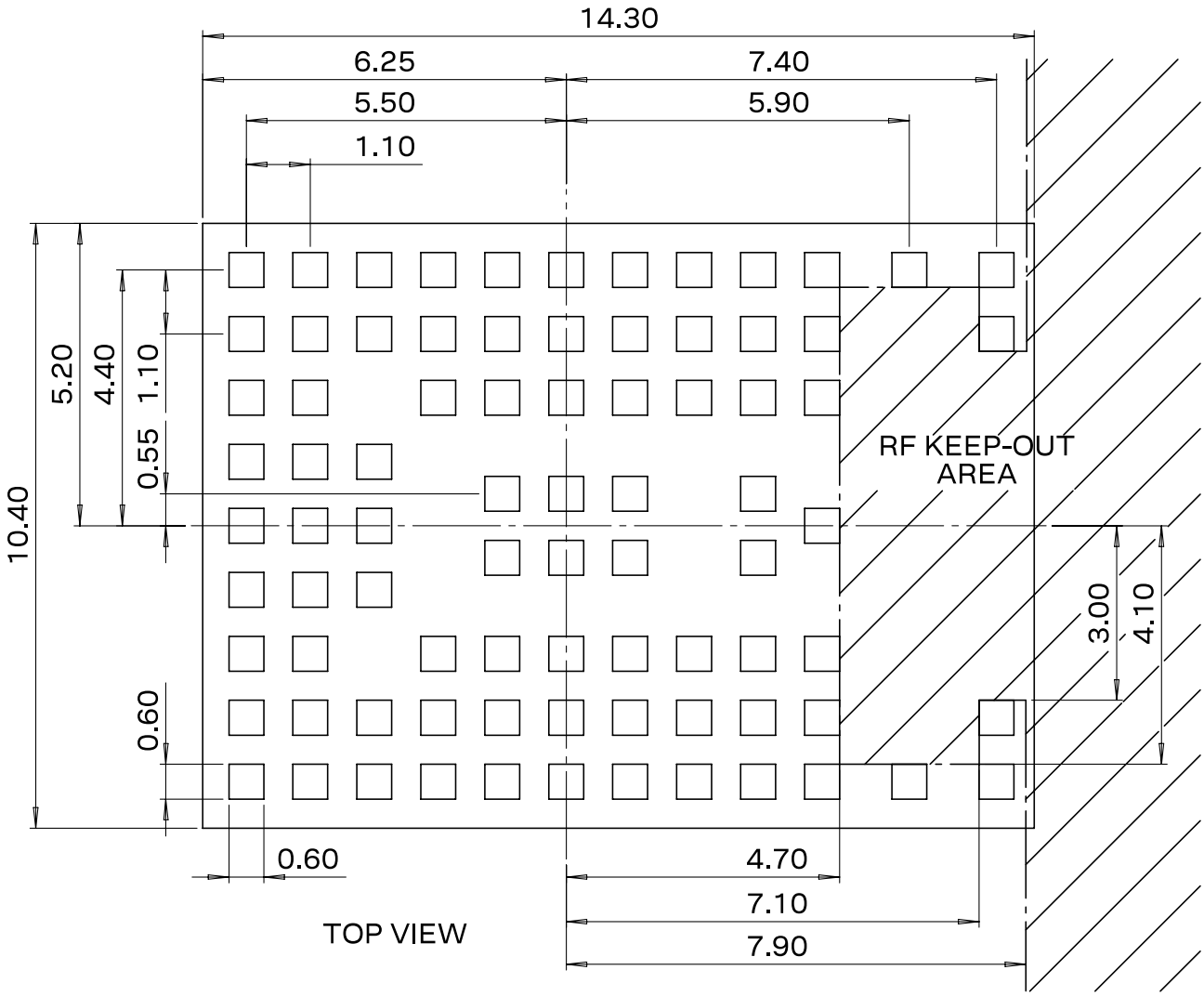

All dimensions in mm.

Figure 4: NORA-W36 footprint dimensions

☞ The RF keep-out area is only required for NORA-W366 modules.

5.2 NORA-W36 mechanical specifications

5.2.1 NORA-W361 mechanical specifications

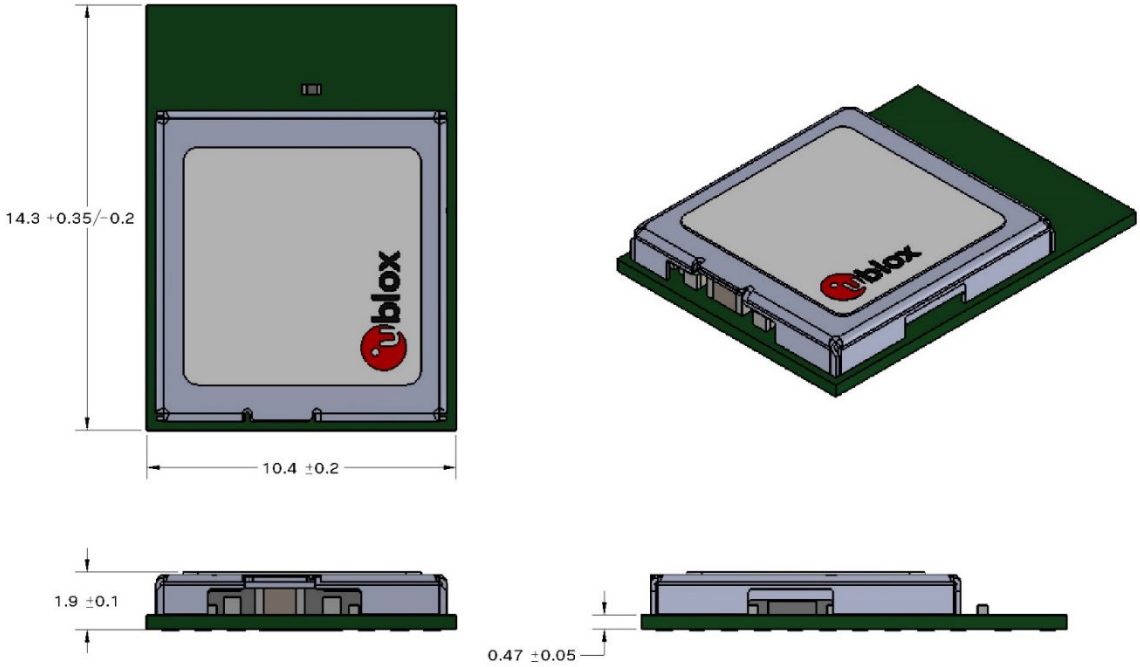

Dimensions in mm

Figure 5: NORA-W361 mechanical specification

5.2.2 NORA-W366 mechanical specifications

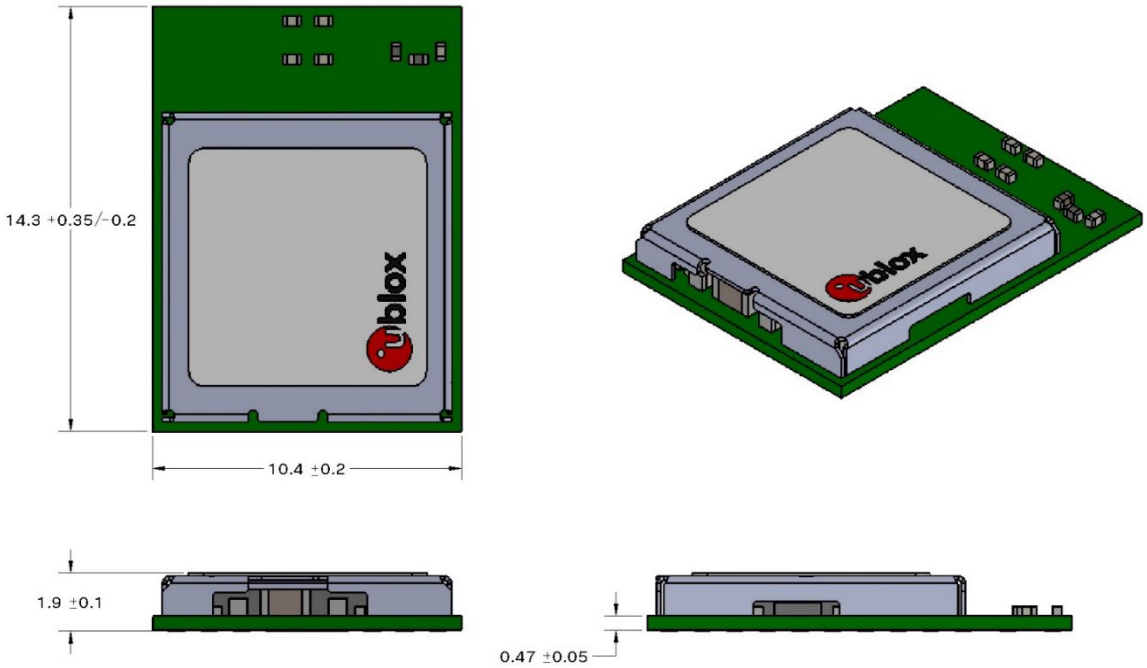

Dimensions in mm

Figure 6: NORA-W366 mechanical specification

6 Qualifications and approvals

6.1 Country approvals

The NORA-W36 module series is certified for use in the countries/regions shown in Table 17.

Country	Agency	Approval
Europe	RED	Approved
Great Britain	UKCA	Approved
USA	FCC	Approved
Canada	ISED	Approved
South Africa	ICASA	Approved[6]
Japan	MIC	Approved[6]
Taiwan	NCC	Approved[6]
South Korea	KCC	Approved[6]
Australia and New Zealand	ACMA	Approved[6]
Brazil	ANATEL	Approved[6]

Table 17: Country approvals

☞ For detailed information about the regulatory requirements that must be met when using NORA-W36 modules in an end-product, see the NORA-W36 system integration manual [1].

6.2 Bluetooth qualification

NORA-W36 series is a Bluetooth qualified design, listed in accordance with the Bluetooth specification.

All products that use Bluetooth technology must be qualified with the Bluetooth Special Interest Group (SIG) to obtain its own Design Number (DN). This is applicable also for products that are using an already Bluetooth qualified module.

The Bluetooth Qualification Process is initiated at the Bluetooth SIG Qualification Workspace (login required). At the “Specify the Design” tab, include the existing design QDID listed in Table 18.

Product type	Declaration ID	Referenced QDID
End product	D065864	194774

Table 18: Bluetooth qualified design ID for NORA-W36 series

6.3 Environmental

6.3.1 RoHS

NORA-W36 series modules are compliant with Directive 2011/65/EU (EU RoHS 2) and its amendment, Directive 2015/863 (EU RoHS3) of the European Parliament and the Council on the restriction of the use of certain hazardous substances in electrical and electronic equipment.

6.3.2 REACH

NORA-W36 series modules do not contain any SVHC (Substance of Very High Concern), as defined by Directive EC/1907/2006 Article according to REACH Annex XVII.

[6] Requires software update to u-connectXpress v3.0.0 or later

6.4 Antennas

NORA-W366 includes an internal PCB antenna, whereas NORA-W361 is equipped with an antenna pin for connecting an external antenna. For information about the approved antennas for use with NORA-W36 modules, see the system integration manual [1].

7 Product handling

7.1 Packaging

⚠ The information contained in this section is only valid after u-blox has thoroughly tested and approved the module during the Initial Production stage.

7.1.1 Reels

NORA-W36 series modules are delivered on hermetically sealed, reeled tapes for production for efficient production, lot set-up, and tear-down. For more information about packaging, see the Product packaging reference guide [2].

NORA-W36 modules are delivered in quantities of 500 pieces on a reel.

The reel types for NORA-W36 modules are shown in Table 19. For more information about the reel types and packaging used for shipping the modules, see the Product packaging reference guide [2].

Model	Reel type
NORA-W361	A3
NORA-W366	A3

Table 19: Reel types for different NORA-W36 series modules

7.1.2 Tapes

Figure 7 and Figure 8 show the position and orientation of NORA-W36 modules as they are delivered on tape.

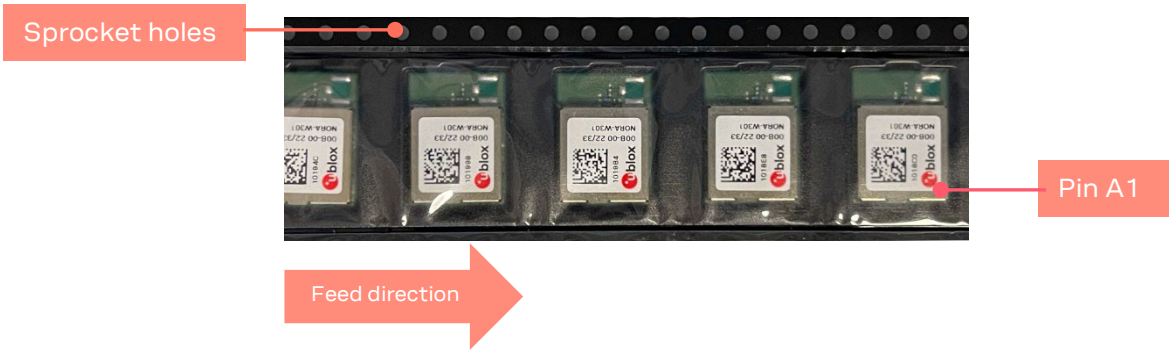

Figure 7: NORA-W361 module on tape orientation

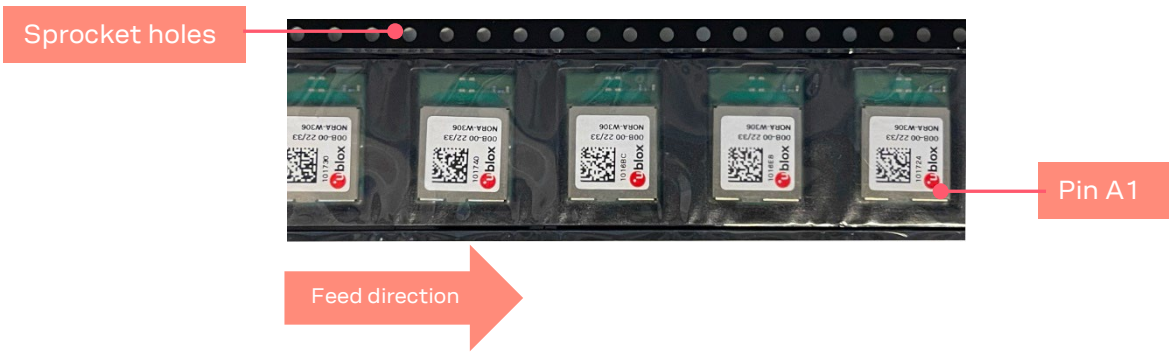

Figure 8: NORA-W366 module on tape orientation

The dimensions of the tapes are shown in Figure 9

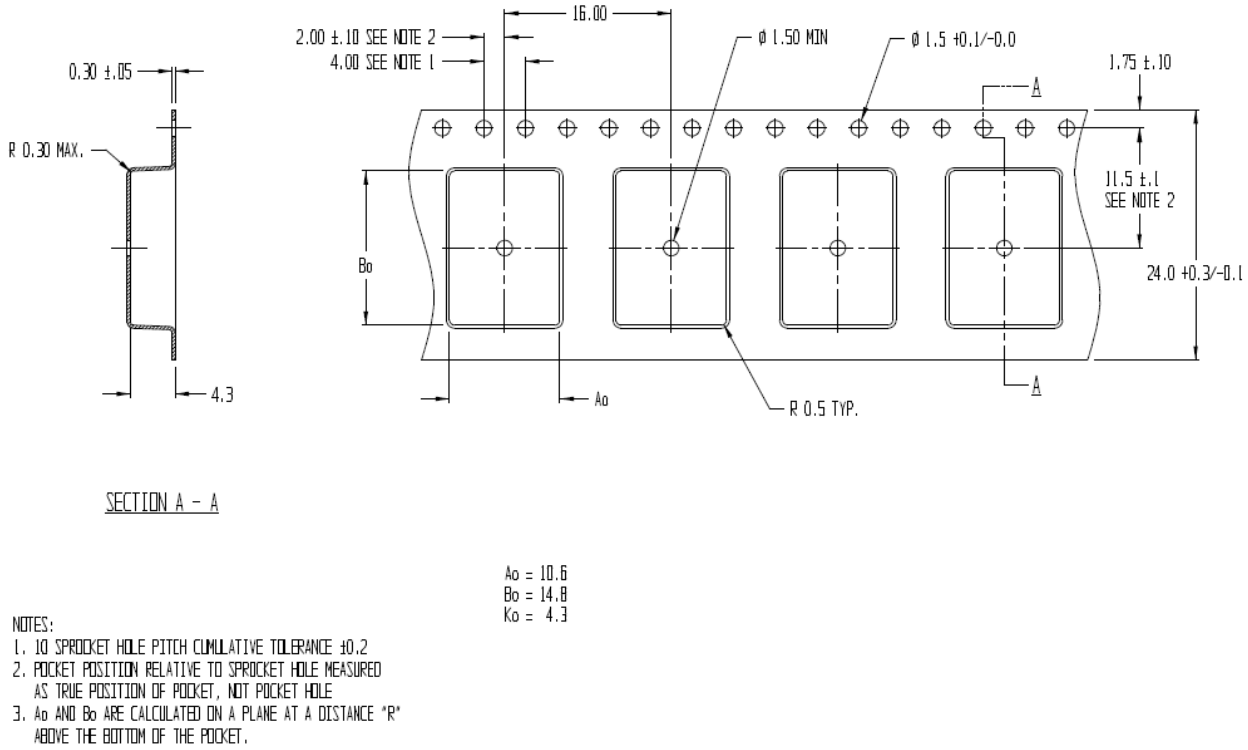

Figure 9: NORA-W361/NORA-W366 tape dimensions

7.2 Moisture sensitivity levels

⚠ NORA-W36 series modules are Moisture Sensitive Devices (MSD) in accordance with the descriptions included in the IPC/JEDEC specification.

The Moisture Sensitivity Level (MSL) defines the required packaging and handling precautions that must be observed when shipping the product. NORA-W36 series modules are rated at MSL level 4. For more information regarding moisture sensitivity levels, labeling, and storage of the modules, see the Product packaging reference guide [2].

☞ For MSL standards, see IPC/JEDEC J-STD-020, which can be downloaded from www.jedec.org.

7.3 Reflow soldering

Reflow profiles must be selected according to u-blox recommendations. For more information, see the NORA-W36 series system integration manual [1].

⚠ Failure to observe these recommendations can result in severe damage to the device.

7.4 ESD precautions

NORA-W36 series modules are Electrostatic Sensitive Devices (ESD) that contain highly sensitive electronic circuitry. Handling the NORA-W36 series modules without proper ESD protection can destroy or damage the modules permanently. See also Maximum ESD ratings.

Proper ESD handling and packaging procedures must be applied throughout the processing, handling, and operation of any application that incorporates the NORA-W36 series module. The ESD precautions must be observed during the production, test and verification of the application board on which the module is mounted, as described in the NORA-W36 series system integration manual [1].

⚠ Failure to observe these recommendations can result in severe damage to the device.

8 Labeling and ordering

8.1 Product labeling

The labels (8 x 8 mm) on NORA-W36 series modules include important product information.

Figure 10 shows the label applied to the modules, which includes the product type number, revision, and production date. The data matrix also bears a unique serial number and the u-blox logo.

All units in mm unless specified otherwise specified.

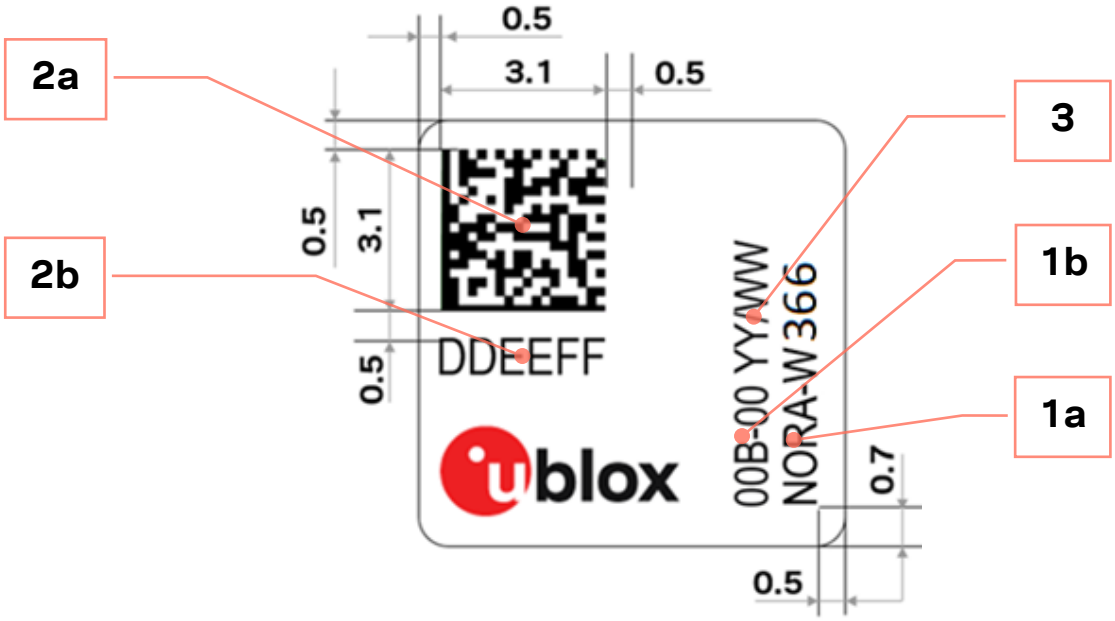

Figure 10: Location of product type number on the NORA-W36 series module label

Reference	Description
1a	Product Name (Applicable model names: NORA-W361, NORA-W366).
1b	Product type number suffix.
2a	Data Matrix with unique serial number comprising 19 alphanumeric symbols: • The first 3 symbols are used for production tracking and are an abbreviated representation of the Type number that is unique to each module variant. • The following 12 symbols represent the base MAC address (AABBCCDDEEFF) of the 4 unique addresses assigned to the module. See also the SIM [1]. • The last 4 symbols represent the hardware and firmware version encoded HHFF.
2b	The last 6 hex symbols of the base MAC address (AABBCC**DDEEFF**). See also the SIM [1].
3	Date of production encoded YY/WW (year/week).

Table 20: NORA-W36 series label description

8.2 Ordering information

Ordering code	Product	u-connectXpress version
NORA-W361-00B	Module with antenna pin, integrating RTL8720DF.	1.0.0
NORA-W366-00B	Module with internal PCB trace antenna, integrating RTL8720DF.	1.0.0
NORA-W361-01B	Module with antenna pin, integrating RTL8720DF.	3.2.0
NORA-W366-01B	Module with internal PCB trace antenna, integrating RTL8720DF.	3.2.0

Table 21: Product ordering codes

Appendix

A Glossary

Abbreviation	Definition
ADC	Analog to Digital Converter
ARM	Arm (Advanced RISC Machines) Holdings
BOD	Brown-Out Detect
CDM	Charge Device Model
COMP	Comparator
CPU	Central Processing Unit
DN	Design Number
ESD	ElectroStatic Discharge
IEEE	Institute of Electrical and Electronics Engineers
GATT	Generic Attributes
GPIO	General Purpose Input / Output
HBM	Human Body Model
I2C	Inter Integrated Circuit
IOT	Internet of Things
LAN	Local Area Network
LPO	Low Power Oscillator
MAC	Media Access Controller
MCU	Microcontroller Unit
MSL	Moisture Sensitivity Level
PCB	Printed Circuit Board
PCBA	Printed Circuit Board Assembly
PWM	Pulse Width Modulation
RF	Radio Frequency
RTC	Real-Time Clock
SPI	Serial Peripheral Interface
TBD	To Be Determined
TLS	Transport Layer Security
UART	Universal Asynchronous Receiver Transmitter
WLAN	Wireless LAN
WPA	Wi-Fi Protected Access

Table 22: Explanation of the abbreviations and terms used

Related documentation

[1] NORA-W36 system integration manual, UBX- 22021120
[2] Product packaging reference guide, UBX-14001652
[3] NORA-W36 u-connectXpress AT command manual and User Guide, https://github.com/u-blox/u-connectXpress#nora-w36

☞ For product change notifications and regular updates of u-blox documentation, register on our website, www.u-blox.com.

Revision history

Revision	Date	Name	Comments
R01	12-Oct-2022	brec	Initial release
R02	8-Nov-2022	brec	Revised disclosure restriction class.
R03	11-Oct-2023	brec	Updated for Bluetooth v5.3. Added UKCA in Country approvals, updated Absolute maximum ratings, updated debug UART information, updated table data for typical Current consumption. Updated Power save modes section including Wake-up sources table. Updated Table 4: NORA-W36 u-connectXpress pinout to include GPIO and wake up sources.
R04	17-May-2024	brec	Updates for initial production, updated Table 17, updated Current consumption, added Throughput performance.
R05	18-Oct-2024	brec, mhan	Updated Country approvals to include all listed countries as approved. Updated Bluetooth qualification with new qualification process. Corrected Table 4, pin B1 direction. Updated Table 11: Typical current consumption with current consumption values for Auto sleep.
R06	29-Oct-2025	magj	Changed product status to Mass Production. Minor editorial updates throughout the document.
R07	17-Feb-2026	lalb	Updated the links to the AT command manual and the User Guide in Related documentation.
R08	13-May-2026	mlju	Updated the applicable products tables with new ordering codes for modules running u-connectXpress v3.2.0.

Contact

u-blox AG

Address: Zürcherstrasse 68
8800 Thalwil
Switzerland

For further support and contact information, visit us at www.u-blox.com/support.