GD25B512ME

DATASHEET

Contents

1 FEATURES 4

2 GENERAL DESCRIPTIONS 5

3 MEMORY ORGANIZATION 9

4 DEVICE OPERATIONS 10

4.1 SPI MODE 10
4.2 QPI MODE 10
4.3 RESET FUNCTION 10

5 DATA PROTECTION 12

6 REGISTERS 14

6.1 STATUS REGISTER 14
6.2 EXTENDED ADDRESS REGISTER 16

7 INTERNAL CONFIGURATION REGISTER 17

7.1 NONVOLATILE CONFIGURATION REGISTER 17
7.2 VOLATILE CONFIGURATION REGISTER 18
7.3 SUPPORTED CLOCK FREQUENCIES 21
7.4 DATA SEQUENCE WRAPS BY DENSITY 21

8 COMMAND DESCRIPTIONS 22

8.1 ENABLE 4-BYTE MODE (B7H) 27
8.2 DISABLE 4-BYTE MODE (E9H) 27
8.3 WRITE ENABLE (WREN) (06H) 28
8.4 WRITE DISABLE (WRDI) (04H) 28
8.5 WRITE ENABLE FOR VOLATILE STATUS REGISTER (50H) 29
8.6 WRITE STATUS REGISTER (WRSR) (01H/31H) 29
8.7 WRITE EXTENDED ADDRESS REGISTER (C5H) 30
8.8 WRITE NONVOLATILE/VOLATILE CONFIGURATION REGISTER (B1H/81H) 31
8.9 READ STATUS REGISTER (05H/35H) 31
8.10 READ NONVOLATILE/VOLATILE CONFIGURATION REGISTER (B5H/85H) 32
8.11 READ EXTENDED ADDRESS REGISTER (C8H) 33
8.12 READ DATA BYTES (03H/13H) 33
8.13 READ DATA BYTES AT HIGHER SPEED (0BH/0CH) 34
8.14 QUAD OUTPUT FAST READ (6BH/6CH) 35
8.15 QUAD I/O FAST READ (EBH/ECH) 35
8.16 QUAD I/O DTR READ (EDH/EEH) 37
8.17 PAGE PROGRAM (PP) (02H/12H) 38
8.18 QUAD PAGE PROGRAM (32H/34H) 39

8.19 EXTEND QUAD PAGE PROGRAM (C2H/3EH) 40
8.20 SECTOR ERASE (SE) (20H/21H) 41
8.21 32KB BLOCK ERASE (BE32) (52H/5CH) 42
8.22 64KB BLOCK ERASE (BE64) (D8H/DCH) 43
8.23 CHIP ERASE (CE) (60H/C7H) 43
8.24 ENABLE QPI (38H) 44
8.25 DISABLE QPI (FFH) 44
8.26 DEEP POWER-DOWN (DP) (B9H) 45
8.27 RELEASE FROM DEEP POWER-DOWN (ABH) 45
8.28 READ UNIQUE ID (4BH) 46
8.29 READ IDENTIFICATION (RDID) (9FH/9EH) 47
8.30 PROGRAM/ERASE SUSPEND (PES) (75H) 48
8.31 PROGRAM/ERASE RESUME (PER) (7AH) 48
8.32 ERASE SECURITY REGISTERS (44H) 49
8.33 PROGRAM SECURITY REGISTERS (42H) 50
8.34 READ SECURITY REGISTERS (48H) 51
8.35 INDIVIDUAL BLOCK/SECTOR LOCK (36H)/UNLOCK (39H)/READ (3DH) 52
8.36 GLOBAL BLOCK/SECTOR LOCK (7EH) OR UNLOCK (98H) 53
8.37 ENABLE RESET (66H) AND RESET (99H) 54
8.38 READ SERIAL FLASH DISCOVERABLE PARAMETER (5AH) 55

9 ELECTRICAL CHARACTERISTICS 57

9.1 POWER-ON TIMING 57
9.2 INITIAL DELIVERY STATE 57
9.3 ABSOLUTE MAXIMUM RATINGS 57
9.4 CAPACITANCE MEASUREMENT CONDITIONS 58
9.5 DC CHARACTERISTICS 59
9.6 AC CHARACTERISTICS 62

10 ORDERING INFORMATION 70

10.1 VALID PART NUMBERS 71

11 PACKAGE INFORMATION 73

11.1 PACKAGE SOP16 300MIL 73
11.2 PACKAGE WSON8 (8X6MM) 73
11.3 PACKAGE TFBGA-24BALL (5X5 BALL ARRAY) 75

12 REVISION HISTORY 76

1 FEATURES

- 512M-bit Serial Flash
  - 64M-Byte
  - 256 Bytes per programmable page

- Standard, Quad SPI, DTR,QPI
  - Standard SPI: SCLK, CS#, SI, SO, WP#, RESET#
  - Quad SPI: SCLK, CS#, IO0, IO1, IO2, IO3, RESET#
  - QPI: SCLK, CS#, IO0, IO1, IO2, IO3, RESET#
  - SPI DTR (Double Transfer Rate) Read
  - 3 or 4-Byte Address Mode

- High Speed Clock Frequency
  - 133MHz for fast read
  - Quad I/O Data transfer up to 532Mbits/s
  - QPI Mode Data transfer up to 532Mbits/s
  - DTR Quad I/O Data transfer up to 720Mbits/s

- Allows XIP (eXecute in Place) Operation
  - High speed Read reduce overall XiP instruction fetch time
  - Continuous Read with Wrap further reduce data latency to fill up SoC cache

- Software/Hardware Write Protection
  - Write protect all/portion of memory via software
  - Enable/Disable protection with WP# Pin
  - Individual Block Protection

- Fast Program/Erase Speed
  - Page Program time: 0.15ms typical
  - Sector Erase time: 30ms typical
  - Block Erase time: 0.15/0.22s typical
  - Chip Erase time: 150s typical

- Flexible Architecture
  - Sector of 4K-Byte
  - Block of 32/64K-Byte
  - Erase/Program Suspend/Resume

- Low Power Consumption
  - 16μA typical stand-by current
  - 2μA typical power-down current

- Advanced Security Features
  - 128-bit Unique ID
  - 4K-Byte Security Registers With OTP Lock

- Single Power Supply Voltage
  - Full voltage range: 2.7~3.6V

- Endurance and Data Retention
  - Minimum 100,000 Program/Erase Cycles
  - 20-year data retention typical

- Package Information
  - SOP16 300mil
  - WSON8 (8x6mm)
  - TFBGA-24ball (5x5 Ball Array)

2 GENERAL DESCRIPTIONS

The GD25B512ME (512M-bit) Serial flash supports the standard Serial Peripheral Interface (SPI), and supports the Quad SPI and DTR mode: Serial Clock, Chip Select, Serial Data I/O0 (SI), I/O1 (SO), I/O2 (WP#), I/O3, and RESET#. The Quad I/O & Quad output data is transferred with speed of 532Mbits/s, and the DTR Quad I/O data is transferred with speed of 720Mbits/s.

CONNECTION DIAGRAM AND PIN DESCRIPTION

Figure 1 Connection Diagram for SOP16 package

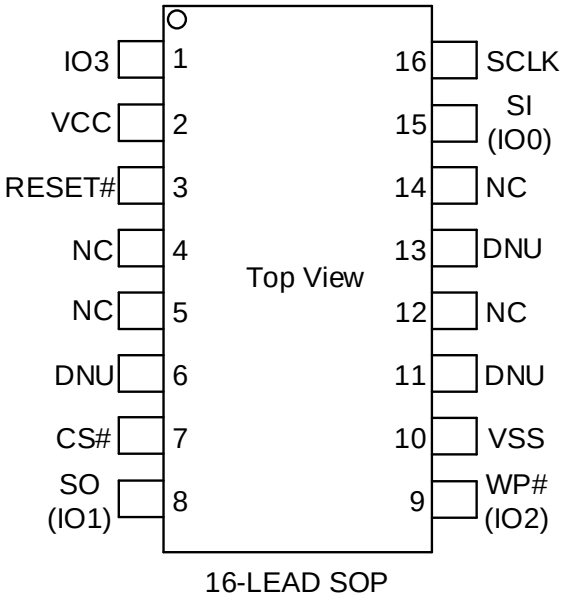

Table 1 Pin Description for SOP16 package

Pin No.	Pin Name	I/O	Description
1	IO3	I/O	Data Input Output 3
2	VCC		Power Supply
3	RESET#	I	Reset Input
6/11/13	DNU		Do Not Use (It may connect to internal signal inside)
7	CS#	I	Chip Select Input
8	SO (IO1)	I/O	Data Output (Data Input Output 1)
9	WP# (IO2)	I/O	Write Protect Input (Data Input Output 2)
10	VSS		Ground
15	SI (IO0)	I/O	Data Input (Data Input Output 0)
16	SCLK	I	Serial Clock Input
Multiple	NC		Not Connect

Note:

1. CS# must be driven high if chip is not selected. Please don't leave CS# floating any time after power is on.
2. The DNU pin must be floating. It may connect to internal signal inside.
3. The NC pin is not connected to any internal signal. It is OK to connect it to the system ground (GND) or leave it floating.

4. The RESET# pin is a dedicated hardware reset pin regardless of device settings or operation states. If the hardware reset function is not used, it is recommended to connect it to VCC in the system but leaving it floating is OK.

Figure 2 Connection Diagram for WSON8 package

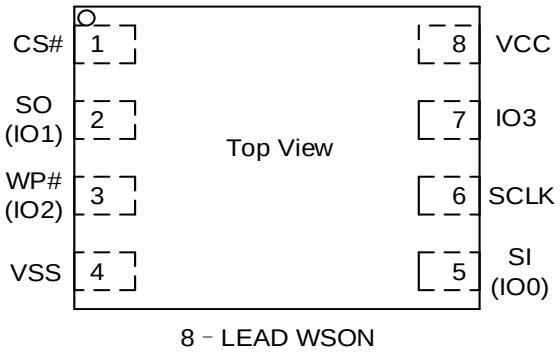

Table 2 Pin Description for WSON8 package

Pin No.	Pin Name	I/O	Description
1	CS#	I	Chip Select Input
2	SO (IO1)	I/O	Data Output (Data Input Output 1)
3	WP# (IO2)	I/O	Write Protect Input (Data Input Output 2)
4	VSS		Ground
5	SI (IO0)	I/O	Data Input (Data Input Output 0)
6	SCLK	I	Serial Clock Input
7	IO3	I/O	Data Input Output 3
8	VCC		Power Supply

Note:

1. CS# must be driven high if chip is not selected. Please don’t leave CS# floating any time after power is on.

Figure 3 Connection Diagram for TFBGA24 5x5 ball array package

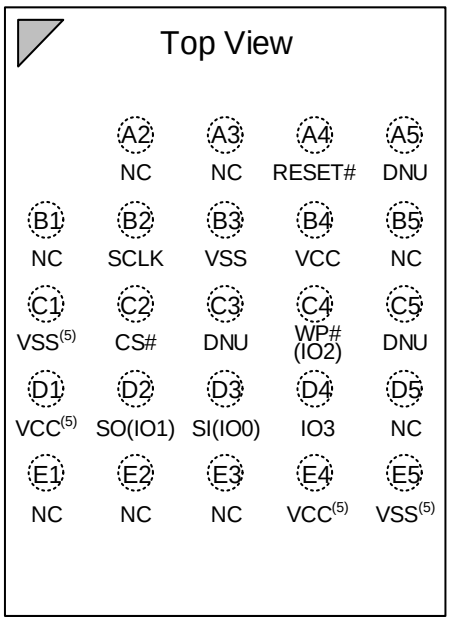

24-BALL TFBGA (5x5 ball array)

Table 3 Ball Description for TFBGA24 5x5 ball array package

Pin No.	Pin Name	I/O	Description
A4	RESET#	I	Reset Input
A5/C3/C5	DNU		Do Not Use (It may connect to internal signal inside)
B2	SCLK	I	Serial Clock Input
B3/C1/E5	VSS		Ground
B4/D1/E4	VCC		Power Supply
C2	CS#	I	Chip Select Input
C4	WP# (IO2)	I/O	Write Protect Input (Data Input Output 2)
D2	SO (IO1)	I/O	Data Output (Data Input Output 1)
D3	SI (IO0)	I/O	Data Input (Data Input Output 0)
D4	IO3	I/O	Data Input Output 3
Multiple	NC		Not Connect

Note:

1. CS# must be driven high if chip is not selected. Please don't leave CS# floating any time after power is on.
2. The DNU ball must be floating. It may connect to internal signal inside.
3. The NC ball is not connected to any internal signal. It is OK to connect it to the system ground (GND) or leave it floating.
4. The RESET# pin is a dedicated hardware reset pin regardless of device settings or operation states. If the hardware reset function is not used, it is recommended to connect it to VCC in the system but leaving it floating is OK.
5. The device can work with only one group of VCC/VSS connected. Ball B4 must be connected to VCC and Ball B3 must be connected to VSS. The other two groups of VCC/VSS balls (Ball C1/D1/E4/E5) are optional. If Ball C1/D1/E4/E5 are not used, they must be left floating.

BLOCK DIAGRAM

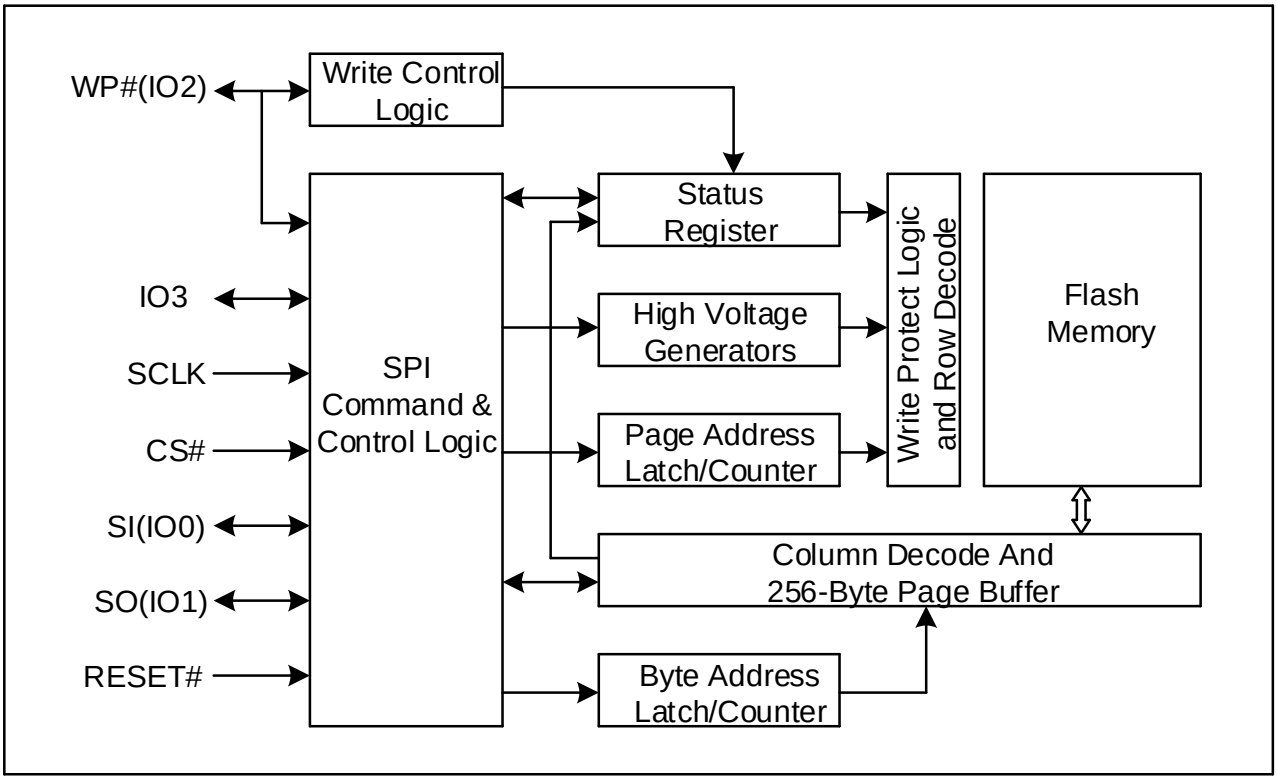

3 MEMORY ORGANIZATION

GD25B512ME

Each device has	Each block has	Each sector has	Each page has	
64M	64/32K	4K	256	Bytes
256K	256/128	16	-	pages
16K	16/8	-	-	sectors
1K/2K	-	-	-	blocks

UNIFORM BLOCK SECTOR ARCHITECTURE

GD25B512ME 64K Bytes Block Sector Architecture

Block	Sector	Address range	
1023	16383	3FFF000H	3FFFFFFH
	.....	.....	.....
	16368	3FF0000H	3FF0FFFH
1022	16367	3FEF000H	3FEFFFFH
	.....	.....	.....
	16352	3FE0000H	3FE0FFFH
.....	.....	.....	.....
	.....	.....	.....
	.....	.....	.....
.....	.....	.....	.....
	.....	.....	.....
	.....	.....	.....
2	47	02F000H	02FFFFH
	.....	.....	.....
	32	020000H	020FFFH
1	31	01F000H	01FFFFH
	.....	.....	.....
	16	010000H	010FFFH
0	15	00F000H	00FFFFH
	.....	.....	.....
	0	000000H	000FFFH

4 DEVICE OPERATIONS

4.1 SPI Mode

Standard SPI

The GD25B512ME features a serial peripheral interface on 4 signals bus: Serial Clock (SCLK), Chip Select (CS#), Serial Data Input (SI) and Serial Data Output (SO). Both SPI bus mode 0 and 3 are supported. Input data is latched on the rising edge of SCLK and data shifts out on the falling edge of SCLK.

Quad SPI

The GD25B512ME supports Quad SPI operation when using the “Quad Output Fast Read”, “Quad I/O Fast Read”, “Quad Page Program” (6BH/6CH, EBH/ECH, 32H/34H, C2H/3EH) commands. These commands allow data to be transferred to or from the device at four times the rate of the standard SPI. When using the Quad SPI command the SI and SO pins become bidirectional I/O pins: IO0 and IO1.

DTR Quad SPI

The GD25B512ME supports DTR Quad SPI operation when using the “DTR Quad I/O Fast Read” (EDH/EEH) command. These commands allow data to be transferred to or from the device at eight times the rate of the standard SPI, and data output will be latched on both rising and falling edges of the serial clock. When using the DTR Quad SPI command the SI and SO pins become bidirectional I/O pins: IO0 and IO1.

4.2 QPI Mode

The GD25B512ME supports Quad Peripheral Interface (QPI) operations only when the device is switched from Standard/Quad SPI mode to QPI mode using the “Enable the QPI (38H)” command. The QPI mode utilizes all four IO pins to input the command code. Standard/Quad SPI mode and QPI mode are exclusive. Only one mode can be active at any given times. “Enable the QPI (38H)” and “Disable the QPI (FFH)” commands are used to switch between these two modes. Upon power-up and after software reset using “Enable Reset (66H) and Reset (99H)” command, the default state of the device is Standard/Quad SPI mode.

4.3 RESET Function

The RESET# pin allows the device to be reset by the control.

The RESET# pin goes low for a minimum period of tRLRH will reset the flash. After reset cycle, the flash is at the following states:

- Standby mode
- All the volatile bits will return to the default status as power on.

Figure 4 RESET Condition

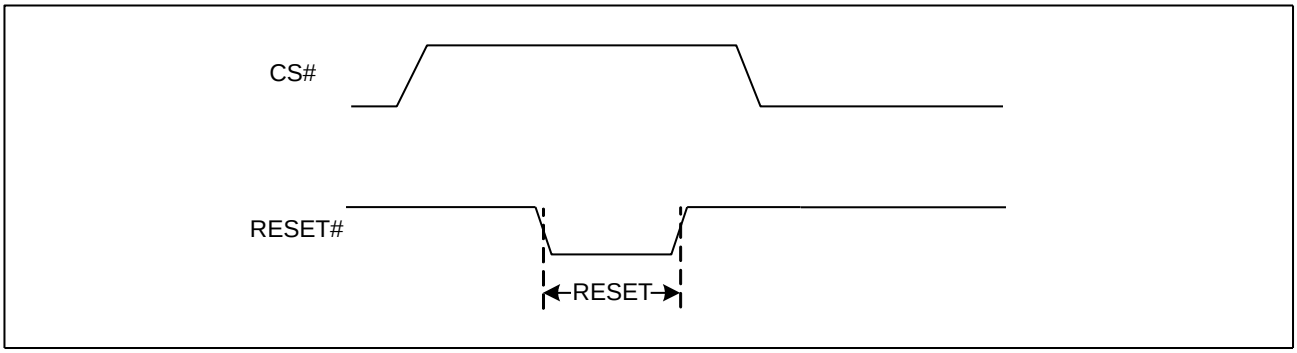

5 DATA PROTECTION

The GD25B512ME provide the following data protection methods:

- Write Enable (WREN) command: The WREN command is set the Write Enable Latch bit (WEL). The WEL bit will return to reset by the following situation:
  - Power-Up/ Software reset (66H+99H)
  - Write Disable (WRDI)
  - Write Status Register (WRSR)
  - Write Extended Address Register (WEAR)
  - Write Nonvolatile Configuration Register (WNVCR)
  - Write Volatile Configuration Register (WVCR)
  - Page Program (PP)
  - Sector Erase (SE) / Block Erase (BE) / Chip Erase (CE)
  - Erase Security Registers / Program Security Registers
- Software Protection Mode:
  -The Block Protect (BP4, BP3, BP2, BP1, and BP0) bits define the section of the memory array that can be read but cannot be changed.
  - Individual Block Protection bit provides the protection selection of each individual block.
- Hardware Protection Mode: WP# goes low to protect the BP0~BP4 bits and SRP0 bit.
- Deep Power-Down Mode: In Deep Power-Down Mode, all commands are ignored except the Release from Deep Power-Down Mode command and reset command (66H+99H).

Table 4. GD25B512ME Protected area size

Status Register Content					Memory Content			
BP4	**BP3**	**BP2**	**BP1**	**BP0**	**Blocks**	**Addresses**	**Density**	**Portion**
X	0	0	0	0	NONE	NONE	NONE	NONE
0	0	0	0	1	1023	03FF0000h-03FFFFFFh	64KB	Upper 1/1024
0	0	0	1	0	1022 to 1023	03FE0000h-03FFFFFFh	128KB	Upper 1/512
0	0	0	1	1	1020 to 1023	03FC0000h-03FFFFFFh	256KB	Upper 1/256
0	0	1	0	0	1016 to 1023	03F80000h-03FFFFFFh	512KB	Upper 1/128
0	0	1	0	1	1008 to 1023	03F00000h-03FFFFFFh	1MB	Upper 1/64
0	0	1	1	0	992 to 1023	03E00000h-03FFFFFFh	2MB	Upper 1/32
0	0	1	1	1	960 to 1023	03C00000h-03FFFFFFh	4MB	Upper 1/16
0	1	0	0	0	896 to 1023	03800000h-03FFFFFFh	8MB	Upper 1/8
0	1	0	0	1	768 to 1023	03000000h-03FFFFFFh	16MB	Upper 1/4
0	1	0	1	0	512 to 1023	02000000h-03FFFFFFh	32MB	Upper 1/2
1	0	0	0	1	0	00000000h-0000FFFFh	64KB	Lower 1/1024
1	0	0	1	0	0 to 1	00000000h-0001FFFFh	128KB	Lower 1/512
1	0	0	1	1	0 to 3	00000000h-0003FFFFh	256KB	Lower 1/256
1	0	1	0	0	0 to 7	00000000h-0007FFFFh	512KB	Lower 1/128
1	0	1	0	1	0 to 15	00000000h-000FFFFFh	1MB	Lower 1/64
1	0	1	1	0	0 to 31	00000000h-001FFFFFh	2MB	Lower 1/32

1	0	1	1	1	0 to 63	00000000h-003FFFFFh	4MB	Lower 1/16
1	1	0	0	0	0 to 127	00000000h-007FFFFFh	8MB	Lower 1/8
1	1	0	0	1	0 to 255	00000000h-00FFFFFFh	16MB	Lower 1/4
1	1	0	1	0	0 to 511	00000000h-01FFFFFFh	32MB	Lower 1/2
X	1	1	X	X	ALL	00000000h-03FFFFFFh	64MB	ALL
X	1	0	1	1	ALL	00000000h-03FFFFFFh	64MB	ALL

Table 5. GD25B512ME Individual Block Protection (WPS=0)

Block	Sector	Address range		Individual Block Lock Operation
1023	16383	03FF F000h	03FF FFFFh	**1024 Blocks** **Block Lock: 36H+Address** **Block Unlock: 39H+Address** **Read Block Lock: 3DH+Address** **Global Block Lock: 7EH** **Global Block Unlock: 98H**
	……	……	……	
	16368	03FF 0000h	03FF 0FFFh	
1022	16352~16367	03FE 0000h	03FE FFFFh	
……	……	……	……	
……	……	……	……	
……	……	……	……	
1	16~31	0001 0000h	0001 FFFFh	
0	15	0000 F000h	0000 FFFFh	
	……	……	……	
	0	0000 0000h	0000 0FFFh	

Notes:

1. Protection configuration: This bit is used to select which Write Protect scheme should be used.
2. Individual Block Protection bits are volatile lock bits. Each volatile bit corresponds to and provides volatile protection for an individual memory sector, which is locked temporarily (protection is cleared when the device is reset or powered down).
3. The first and last sectors will have volatile protections at the 4KB sector level. Each 4KB sector in these sectors can be individually locked by volatile lock bits setting.

6 REGISTERS

6.1 Status Register

Table 6. Status Register-SR No.1

No.	Bit Name	Description	Note
S7	SRP0	Status Register Protection Bit	Non-volatile writable
S6	BP4	Block Protect Bit	Non-volatile writable
S5	BP3	Block Protect Bit	Non-volatile writable
S4	BP2	Block Protect Bit	Non-volatile writable
S3	BP1	Block Protect Bit	Non-volatile writable
S2	BP0	Block Protect Bit	Non-volatile writable
S1	WEL	Write Enable Latch	Volatile, read only
S0	WIP	Erase/Write In Progress	Volatile, read only

Table 7. Status Register-SR No.2

No.	Bit Name	Description	Note
S15	SUS1	Erase Suspend Bit	Volatile, read only
S14	SRP1	Status Register Protection Bit	Non-volatile writable
S13	EE	Erase Error Bit	Volatile, read only
S12	PE	Program Error	Volatile, read only
S11	LB	Security Register Lock Bit	Non-volatile writable (OTP)
S10	SUS2	Program Suspend Bit	Volatile, read only
S9	Reserved	Reserved	Reserved
S8	ADS	Current Address Mode	Volatile, read only

The status and control bits of the Status Register are as follows:

WIP bit

The Write in Progress (WIP) bit indicates whether the memory is busy in program/erase/write status register or configuration register progress. When WIP bit sets to 1, means the device is busy in program/erase/write status register or configuration register progress, when WIP bit sets 0, means the device is not in program/erase/write status register or configuration register progress.

WEL bit

The Write Enable Latch (WEL) bit indicates the status of the internal Write Enable Latch. When set to 1 the internal Write Enable Latch is set, when set to 0 the internal Write Enable Latch is reset and no Write, Program or Erase command is accepted.

BP4, BP3, BP2, BP1, BP0 bits

The Block Protect (BP4, BP3, BP2, BP1, and BP0) bits are non-volatile. They define the size of the area to be software protected against Program and Erase commands. These bits are written with the Write Status Register (WRSR) command.

When the Block Protect (BP4, BP3, BP2, BP1, and BP0) bits are set to 1, the relevant memory area becomes protected against Page Program (PP), Sector Erase (SE) and Block Erase (BE) commands. The Block Protect (BP4, BP3, BP2, BP1, and BP0) bits can be written provided that the Hardware Protected mode has not been set. The Chip Erase (CE) command is executed only if none sector or block is protected.

SRP0, SRP1 bits

The Status Register Protect (SRP1 and SRP0) bits are non-volatile Read/Write bits in the status register. The SRP bits control the method of write protection: software protection, hardware protection, power supply lock-down or one time programmable protection.

SRP1	SRP0	#WP	Status Register	Description
0	0	X	Software Protected	The Status Register can be written to after a Write Enable command, WEL=1.(Default)
0	1	0	Hardware Protected	WP#=0, the Status Register locked and cannot be written to.
0	1	1	Hardware Unprotected	WP#=1, the Status Register is unlocked and can be written to after a Write Enable command, WEL=1.
1	0	X	Power Supply Lock-Down(1)(2)	Status Register is protected and cannot be written to again until the next Power-Down, Power-Up cycle.
1	1	X	One Time Program(2)	Status Register is permanently protected and cannot be written to.

NOTE:

1. When SRP1, SRP0= (1, 0), a Power-Down, Power-Up cycle will change SRP1, SRP0 to (0, 0) state.
2. This feature is available on special order. Please contact GigaDevice for details.

ADS bit

The Address Status (ADS) bit is a read only bit that indicates the current address mode the device is operating in. The device is in 3-Byte address mode when ADS=0 (default), and in 4-Byte address mode when ADS=1.

SUS1, SUS2 bits

The SUS1 and SUS2 bits are read only bits in the status register (S15 and S10) that are set to 1 after executing an Program/Erase Suspend (75H) command (The Erase Suspend will set the SUS1 bit to 1, and the Program Suspend will set the SUS2 bit to 1). The SUS1 and SUS2 bits are cleared to 0 by Erase/Program Resume (7AH) command, software reset (66H+99H) command as well as a power-down, power-up cycle.

LB bit

The LB bit is non-volatile One Time Program (OTP) bit in Status Register (S11) that provide the write protect control and status to the Security Registers. The default state of LB bit is 0, the security registers are unlocked. The LB bit can be set to 1 using the Write Register instruction. The LB bit is One Time Programmable, once they are set to 1, the Security Registers will become read-only permanently.

PE bit

The Program Error (PE) bit is a read only bit that indicates a program failure. It will also be set when the user attempts to

program a protected array sector or access the locked OTP space. PE is cleared to "0" after program operation resumes

EE bit

The Erase Error (EE) bit is a read only bit that indicates an erase failure. It will also be set when the user attempts to erase a protected array sector or access the locked OTP space. EE is cleared to "0" after erase operation resumes

6.2 Extended Address Register

Table 8 Extended Address Register

No.	Name	Description	Note
EA7	Reserved	Reserved	Reserved
EA6	Reserved	Reserved	Reserved
EA5	Reserved	Reserved	Reserved
EA4	Reserved	Reserved	Reserved
EA3	Reserved	Reserved	Reserved
EA2	Reserved	Reserved	Reserved
EA1	A25	Address bit	Volatile writable
EA0	A24	Address bit	Volatile writable

The extended address register is only used when the address mode is 3-Byte mode, as to set the higher address. The default value of the address bit is “0”.

For the read operation, the whole array can be continually read out with one command. Data output starts from the selected 128Mb, and it can cross the boundary. When the last Byte of the segment is reached, the next Byte (in a continuous reading) is the first Byte of the next segment. However, the EAR (Extended Address Register) value does not change. The random access reading can only be operated in the selected segment.

The Chip erase command will erase the whole chip and is not limited by EAR selected segment. However, the sector erase, block erase, program operation are limited in selected segment and will not cross the boundary.

A24, A25 bits

The Extended Address Bits are used only when the device is operating in the 3-Byte Address Mode (ADS=0), which is volatile writable by C5H command.

If Configuration Register Byte <5> set to FEH, or an “Enter 4-Byte Address Mode (B7H)” instruction is issued, the device will require 4-Byte address input for all address related instructions, and the Extended Address Bit setting will be ignored.

A25, A24	Address Range
00	0000 0000h-00FF FFFFh
01	0100 0000h-01FF FFFFh
10	0200 0000h-02FF FFFFh
11	0300 0000h-03FF FFFFh

7 INTERNAL CONFIGURATION REGISTER

The memory configuration is set by an internal configuration register that is not directly accessible to users. The user can change the default configuration at power up by using the WRITE NONVOLATILE CONFIGURATION REGISTER. Information from the nonvolatile configuration register overwrites the internal configuration register during power on or after a reset.

The user can change the configuration during device operation using the WRITE VOLATILE CONFIGURATION REGISTER command. Information from the volatile configuration registers overwrite the internal configuration register immediately after the WRITE command completes.

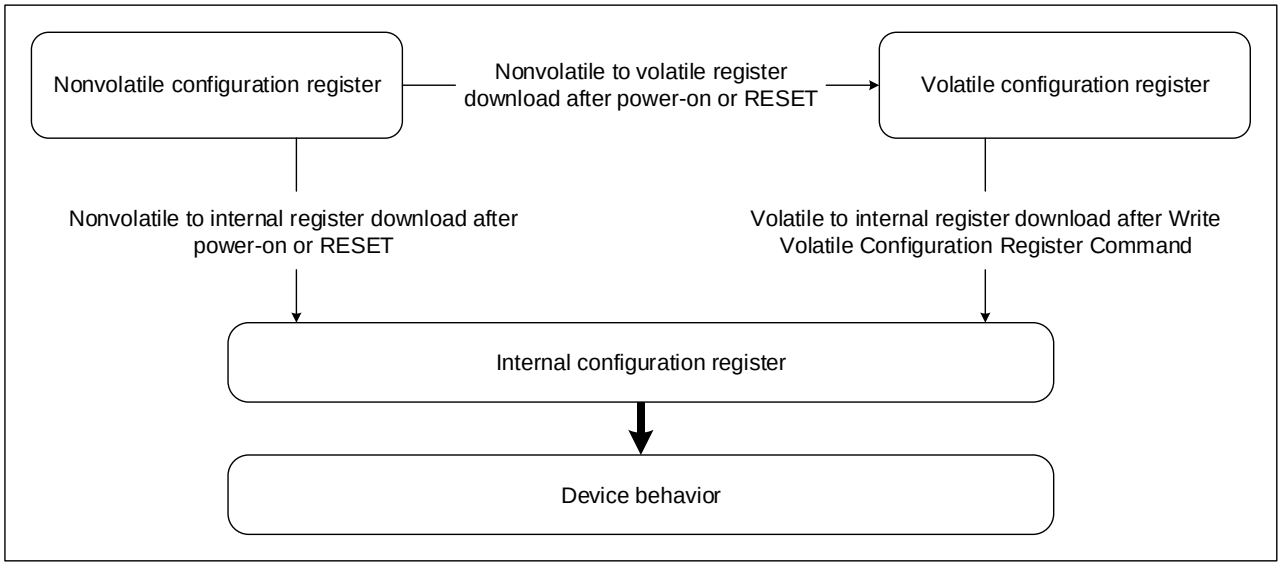

7.1 Nonvolatile Configuration Register

Nonvolatile Configuration Register bits set the device configuration after power-up or reset. All bits are erased (FFh) unless stated otherwise. This register is read from and written to using the READ NONVOLATILE CONFIGURATION REGISTER and the WRITE NONVOLATILE CONFIGURATION REGISTER commands, respectively. The commands use the main array address scheme, but only the LSB is used to access different register settings, thereby providing up to 256 Bytes of registers (See the table below for the details). A WRITE command to a reserved address will set the device to the default status of the corresponding Byte.

Table 9 Nonvolatile Configuration Register

Addr	Settings	bit7	bit6	bit5	bit4	bit3	bit2	bit1	bit0	Description
<1>	Dummy cycle configuration(6-7)	0	0	0	0	0	0	1	1	3 Dummy
		0	0	0	0	0	1	0	0	4 Dummy
		…	…	…	…	…	…	…	…	05~1E: 5~30 Dummy (Default=06h)
		Others								Reserved
<3>	On die termination	1	1	1	1	x	x	x	x	ODT Disabled (Default)
		1	1	1	0	x	x	x	x	300-Ohm ODT
		1	1	0	1	x	x	x	x	150-Ohm ODT

		1	1	0	0	x	x	x	x	100-Ohm ODT
	Driver strength configuration	x	x	x	x	1	1	1	1	50 Ohm (Default)
		x	x	x	x	1	1	1	0	35 Ohm
		x	x	x	x	1	1	0	1	25 Ohm
		x	x	x	x	1	1	0	0	18 Ohm
<4>	DLP enable	x	x	x	x	1	x	x	x	DLP Disabled (Default)
		x	x	x	x	0	x	x	x	DLP Enabled
	Protection configuration	x	x	x	x	x	1	x	x	BP Protection (Default)
		x	x	x	x	x	0	x	x	WPS Protection(8)
<5>	Beyond 128Mb addr configuration	1	1	1	1	1	1	1	1	3-Byte Address (Default)
		1	1	1	1	1	1	1	0	4-Byte Address
		Others								Reserved
<6>	Continuous Read configuration(9)	1	1	1	1	1	1	1	1	XIP Disabled (Default)
		1	1	1	1	1	1	1	0	XIP Enabled
		Others								Reserved
<7>	Wrap configuration(9)	1	1	1	1	1	1	1	1	Wrap Disabled (Default)
		1	1	1	1	1	1	1	0	64-Byte Wrap
		1	1	1	1	1	1	0	1	32-Byte Wrap
		1	1	1	1	1	1	0	0	16-Byte Wrap
		Others								Reserved

Notes:

1. The number of cycles must be set to accord with the clock frequency, which varies by the type of FAST READ command (See Supported Clock Frequencies table). Insufficient dummy clock cycles for the operating frequency causes the memory to read incorrect data.
2. 03H/13H: SPI 0 dummy; QPI N/A
3. 05H/35H/9EH/9FH: SPI&QPI 0 dummy.
4. 3DH: SPI 0 dummy; QPI 8 dummy.
5. 4BH/5AH/B5H/85H: SPI&QPI 8 dummy.
6. 0BH/0CH/6BH/6CH/48H: SPI 8 dummy; QPI dummy follow CONFIGURATION REGISTER<1> (initiation = 6 dummy)
7. EBH/ECH/EDH/EEH: SPI&QPI dummy follow CONFIGURATION REGISTER<1> (initiation = 6 dummy)
8. When WPS protection is enabled, the entire memory array is being protected after Power-up or Reset.
9. Only Quad I/O (EBH and ECH) and DTR Quad I/O fast read (EDH and EEH) support wrap read and XIP operation.

7.2 Volatile Configuration Register

Volatile Configuration Register bits temporarily set the device configuration after power-up or reset. All bits are erased (FFh) unless stated otherwise. This register is read from and written to using the READ VOLATILE CONFIGURATION REGISTER and the WRITE VOLATILE CONFIGURATION REGISTER commands, respectively. The commands use the main array address scheme; however, only the LSB is used to access different register settings to provide up to 256 Bytes of registers (See the table below for the details). A WRITE command to a reserved address will set the device to the default status of the corresponding Byte.

Table 10 Volatile Configuration Register

Addr	Settings	bit7	bit6	bit5	bit4	bit3	bit2	bit1	bit0	Description
<1>	Dummy cycle configuration(6-7)	0	0	0	0	0	0	1	1	3 Dummy
		0	0	0	0	0	1	0	0	4 Dummy
		…	…	…	…	…	…	…	…	05~1E: 5~30 Dummy (Default=06h)
		Others								Reserved
<3>	On die termination	1	1	1	1	x	x	x	x	ODT Disabled (Default)
		1	1	1	0	x	x	x	x	300-Ohm ODT
		1	1	0	1	x	x	x	x	150-Ohm ODT
		1	1	0	0	x	x	x	x	100-Ohm ODT
	Driver strength configuration	x	x	x	x	1	1	1	1	50 Ohm (Default)
		x	x	x	x	1	1	1	0	35 Ohm
		x	x	x	x	1	1	0	1	25 Ohm
		x	x	x	x	1	1	0	0	18 Ohm
<4>	DLP enable	x	x	x	x	1	x	x	x	DLP Disabled (Default)
		x	x	x	x	0	x	x	x	DLP Enabled
	Protection configuration	x	x	x	x	x	1	x	x	BP Protection (Default)
		x	x	x	x	x	0	x	x	WPS Protection(8)
<5>	Beyond 128Mb addr configuration	1	1	1	1	1	1	1	1	3-Byte Address (Default)
		1	1	1	1	1	1	1	0	4-Byte Address
		Others								Reserved
<6>	Continuous Read configuration(9)	1	1	1	1	1	1	1	1	XIP Disabled (Default)
		1	1	1	1	1	1	1	0	XIP Enabled
		Others								Reserved
<7>	Wrap configuration(9)	1	1	1	1	1	1	1	1	Wrap Disabled (Default)
		1	1	1	1	1	1	1	0	64-Byte Wrap
		1	1	1	1	1	1	0	1	32-Byte Wrap
		1	1	1	1	1	1	0	0	16-Byte Wrap
		Others								Reserved

Notes:

1. The number of cycles must be set to accord with the clock frequency, which varies by the type of FAST READ command (See Supported Clock Frequencies table). Insufficient dummy clock cycles for the operating frequency causes the memory to read incorrect data.
2. 03H/13H: SPI 0 dummy; QPI N/A
3. 05H/35H/9EH/9FH: SPI&QPI 0 dummy.
4. 3DH: SPI 0 dummy; QPI 8 dummy.
5. 4BH/5AH/B5H/85H: SPI&QPI 8 dummy.
6. 0BH/0CH/6BH/6CH/48H: SPI 8 dummy; QPI dummy follow CONFIGURATION REGISTER<1> (initiation = 6 dummy)
7. EBH/ECH/EDH/EEH: SPI&QPI dummy follow CONFIGURATION REGISTER<1> (initiation = 6 dummy)
8. When WPS protection is enabled, the entire memory array is being protected after Power-up or Reset.

9. Only Quad I/O (EBH and ECH) and DTR Quad I/O fast read (EDH and EEH) support wrap read and XIP operation.

DLP bit

The DLP bit is Data Learning Pattern Enable bit, which is writable by B1/81H command. For Quad output, Quad I/O and Quad I/O DTR Fast Read commands, a pre-defined "Data Learning Pattern" can be used by the flash memory controller to determine the flash data output timing on 4 I/O pins. When DLP=0, from the third dummy clock, the flash will output "00110100" Data Learning Pattern sequence on each of the I/O or 4 I/O pins until data output. If the dummy clock is not enough for the output of the whole Data Learning Pattern, the last several bit of the Data Learning Pattern would be cut-off. During this period, controller can fine tune the data latching timing for each I/O pins to achieve optimum system performance. DLP=1 will disable the Data Learning Pattern output.

Figure 5. Data Learning Pattern Sequence Diagram (STR, Dummy Clock ≥ 10)

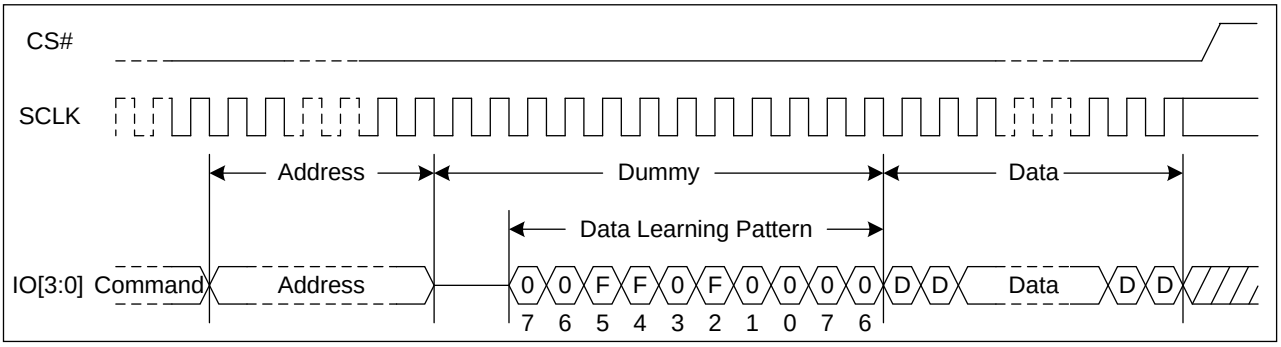

Note: 12 dummy cycle example

Figure 6. Data Learning Pattern Sequence Diagram (STR, Dummy Clock < 10)

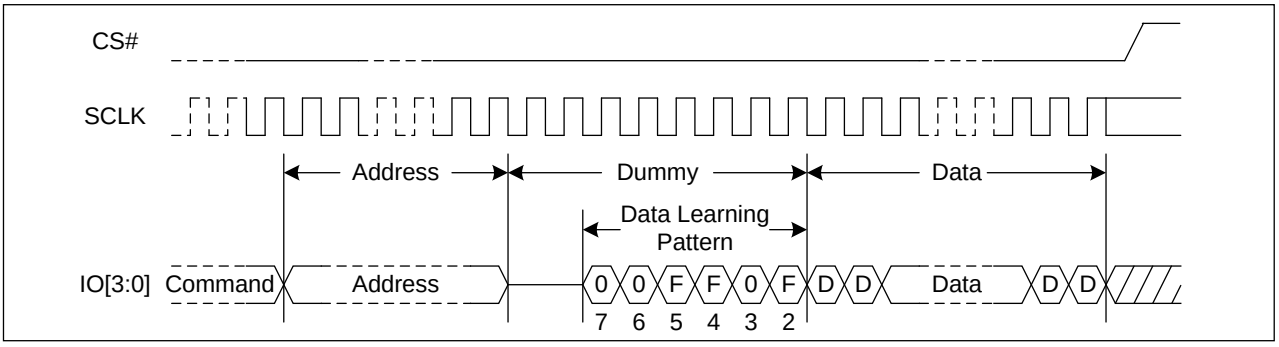

Note: 8 dummy cycle example

Figure 7. Data Learning Pattern Sequence Diagram (DTR, Dummy Clock ≥ 6)

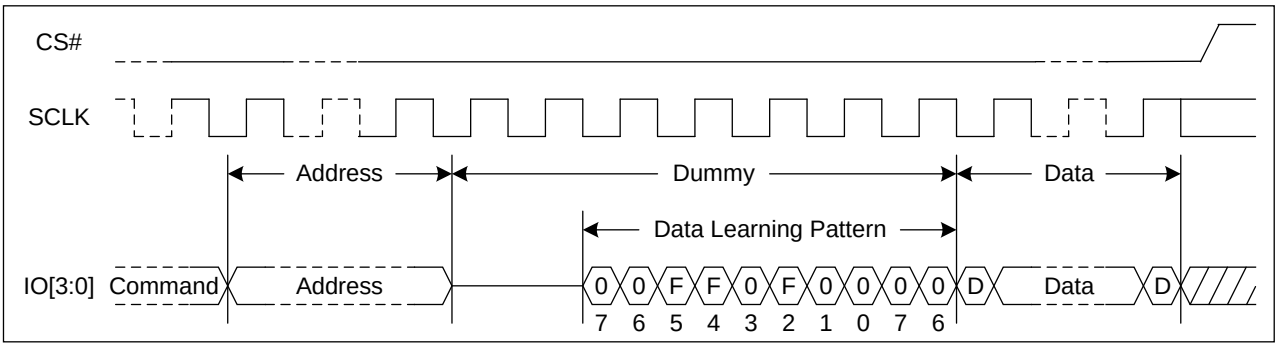

Note: 7 dummy cycle example

Figure 8. Data Learning Pattern Sequence Diagram (DTR, Dummy Clock < 6)

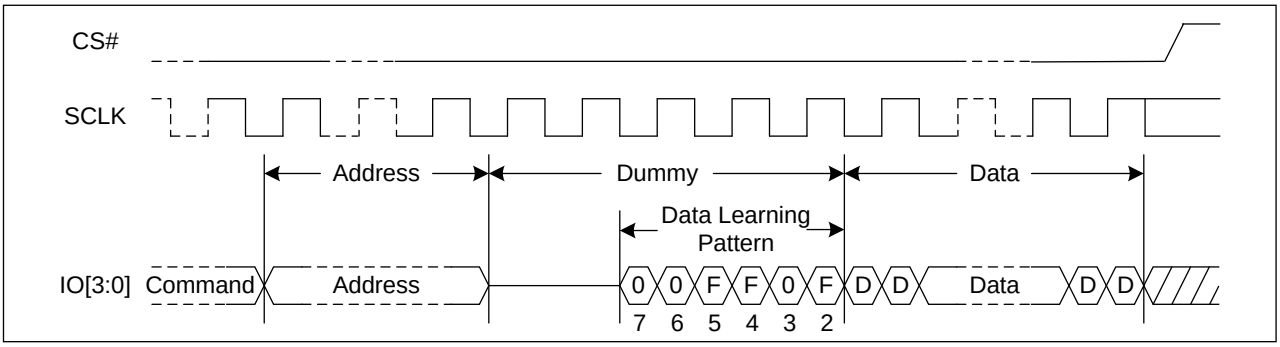

Note: 5 dummy cycle example

7.3 Supported Clock Frequencies

Table 11 Clock Frequencies

Number of Dummy Clock Cycle	Quad Output Fast Read (6BH/6CH) (Only QPI Mode) (1)	Quad I/O Fast Read (EBH/ECH)	DTR Quad I/O Fast Read (EDH/EEH)
4	40	40	40
6	84	84	66
8	104	104	84
10 and above	133	133	90

Note:

1. Quad Output Fast Read (6BH/6CH): SPI Mode 8 dummy.
2. Values are guaranteed by characterization and not 100% tested in production
3. Dummy clock cycle listed above is recommended. Please contact GigaDevice for clock frequency of dummy clock cycle configuration out of the table above.

7.4 Data Sequence Wraps by Density

Table 12 Sequence of Bytes during Wrap

Starting Address	16-Byte Wrap	32-Byte Wrap	64-Byte Wrap
0	0-1-2- . . . -15-0-1- . .	0-1-2- . . . -31-0-1- . .	0-1-2- . . . -63-0-1- . .
1	1-2- . . . -15-0-1-2- . .	1-2- . . . -31-0-1-2- . .	1-2- . . . -63-0-1-2- . .
….	….	….	….
15	15-0-1-2-3- . . . -15-0-1- . .	15-16-17- . . . -31-0-1- . .	15-16-17- . . . -63-0-1- . .
….	….	….	
31	-	31-0-1-2-3- . . . -31-0-1- . .	31-32-33- . . . -63-0-1- . .
…	….	….	….
63	-	-	63-0-1- . . . -63-0-1- . .

8 COMMAND DESCRIPTIONS

All commands, addresses and data are shifted in and out of the device, beginning with the most significant bit on the first rising edge of SCLK after CS# is driven low. Then, the one-Byte command code must be shifted in to the device, with most significant bit first on SI, and each bit is latched on the rising edges of SCLK.

Every command sequence starts with a one-Byte command code. Depending on the command, this might be followed by address Bytes, or by data Bytes, or by both or none. CS# must be driven high after the last bit of the command sequence has been completed. For the command of Read, Fast Read, Read Status Register or Release from Deep Power-Down, and Read Device ID, the shifted-in command sequence is followed by a data-out sequence. All read instruction can be completed after any bit of the data-out sequence is being shifted out, and then CS# must be driven high to return to deselected status.

For the command of Page Program, Sector Erase, Block Erase, Chip Erase, Write Status Register, Write Enable, Write Disable or Deep Power-Down command, CS# must be driven high exactly at a Byte boundary, otherwise the command is rejected, and is not executed. That is CS# must be driven high when the number of clock pulses after CS# being driven low is an exact multiple of eight. For Page Program, if at any time the input Byte is not a full Byte, nothing will happen and WEL will not be reset.

Table 13 Commands (Standard/DTR Quad SPI)

Command name	Code	Standard SPI		Address Bytes	Data Bytes
		Command-Address-Data	Dummy Clock Cycles		
Software Reset Operations					
Enable Reset	66h	1-0-0	0	0	0
Reset	99h	1-0-0	0	0	0
Read ID Operations					
Read Identification	9Eh/9Fh	1-0-(1)	0	0	1 to ∞
Read Serial Flash Discoverable Parameter	5Ah	1-1-(1)	8	3	1 to ∞
Read Unique ID	4Bh	1-1-(1)	8	3(4)	1 to ∞
Read Memory Operations					
Read Data Bytes	03h	1-1-(1)	0	3(4)	1 to ∞
Read Data Bytes at Higher Speed	0Bh	1-1-(1)	8	3(4)	1 to ∞
Quad Output Fast Read	6Bh	1-1-(4)	8	3(4)	1 to ∞
Quad I/O Fast Read	EBh	1-4-(4)	6	3(4)	1 to ∞
Quad I/O DTR Fast Read	EDh	1-4d-(4d)	6	3(4)	1 to ∞
Read Memory Operations with 4-Byte Address					
4-Byte Read Data Bytes	13h	1-1-(1)	0	4	1 to ∞
4-Byte Read Data Bytes at Higher Speed	0Ch	1-1-(1)	8	4	1 to ∞

4-Byte Quad Output Fast Read	6Ch	1-1-(4)	8	4	1 to ∞
4-Byte Quad I/O Fast Read	ECh	1-4-(4)	6	4	1 to ∞
4-Byte Quad I/O DTR Fast Read	EEh	1-4d-(4d)	6	4	1 to ∞
Write Operations					
Write Enable	06h	1-0-0	0	0	0
Write Disable	04h	1-0-0	0	0	0
Write Enable for Volatile Status Register	50h	1-0-0	0	0	0
Read Register Operations					
Read Status Register-1	05h	1-0-(1)	0	0	1 to ∞
Read Status Register-2	35h	1-0-(1)	0	0	1 to ∞
Read Nonvolatile Configuration Register	B5h	1-1-(1)	8	3(4)	1
Read Volatile Configuration Register	85h	1-1-(1)	8	3(4)	1
Read Extended Address Register	C8h	1-0-(1)	0	0	1 to ∞
Write Register Operations					
Write Status Register-1	01h	1-0-1	0	0	1
Write Status Register-2	31h	1-0-1	0	0	1
Write Nonvolatile Configuration Register	B1h	1-1-1	0	3(4)	1
Write Volatile Configuration Register	81h	1-1-1	0	3(4)	1
Write Extended Address Register	C5h	1-0-1	0	0	1
Program Operations					
Page Program	02h	1-1-1	0	3(4)	1 to 256
Quad Page Program	32h	1-1-4	0	3(4)	1 to 256
Extended Quad Page Program	C2h	1-4-4	0	3(4)	1 to 256
Program Operations with 4-Byte Address					
4-Byte Page Program	12h	1-1-1	0	4	1 to 256
4-Byte Quad Page Program	34h	1-1-4	0	4	1 to 256
4-Byte Extended Quad Page Program	3Eh	1-4-4	0	4	1 to 256
Erase Operations					
Sector Erase	20h	1-1-0	0	3(4)	0
32KB Block Erase	52h	1-1-0	0	3(4)	0
64KB Block Erase	D8h	1-1-0	0	3(4)	0

Chip Erase	C7h/60h	1-0-0	0	0	0
Erase Operations with 4-Byte Address					
4-Byte Sector Erase	21h	1-1-0	0	4	0
4-Byte 32KB Block Erase	5Ch	1-1-0	0	4	0
4-Byte 64KB Block Erase	DCh	1-1-0	0	4	0
Suspend/Resume Operations					
Program/Erase Suspend	75h	1-0-0	0	0	0
Program/Erase Resume	7Ah	1-0-0	0	0	0
One-Time Programmable (OTP) Operations					
Read Security Registers	48h	1-1-(1)	8	3(4)	1 to ∞
Program Security Registers	42h	1-1-1	0	3(4)	1 to 256
Erase Security Registers	44h	1-1-0	0	3(4)	0
QPI Mode Operation					
Enable QPI	38h	1-0-0	0	0	0
4-Byte Address Mode Operations					
Enable 4-Byte Address Mode	B7h	1-0-0	0	0	0
Disable 4-Byte Address Mode	E9h	1-0-0	0	0	0
Deep Power-Down Operations					
Deep Power-Down	B9h	1-0-0	0	0	0
Release From Deep Power-Down	ABh	1-0-0	0	0	0
Advanced Sector Protection Operations					
Individual Block/Sector Lock	36h	1-1-0	0	3(4)	0
Individual Block/Sector Unlock	39h	1-1-0	0	3(4)	0
Read Individual Block/Sector Lock	3Dh	1-1-(1)	0	3(4)	1
Global Block/Sector Lock	7Eh	1-0-0	0	0	0
Global Block/Sector Unlock	98h	1-0-0	0	0	0

Table 14 Commands (QPI)

Command name	Code	Command-Address-Data	Dummy Clock Cycles	Address Bytes	Data Bytes
Software Reset Operations					
Enable Reset	66h	4-0-0	0	0	0
Reset	99h	4-0-0	0	0	0
Read ID Operations					
Read Identification	9Eh/9Fh	4-0-(4)	0	0	1 to ∞

Read Serial Flash Discoverable Parameter	5Ah	4-4-(4)	8	3	1 to ∞
Read Unique ID	4Bh	4-4-(4)	8	3(4)	1 to ∞
Read Memory Operations					
Read Data Bytes at Higher Speed	0Bh	4-4-(4)	6	3(4)	1 to ∞
Quad Output Fast Read	6Bh	4-4-(4)	6	3(4)	1 to ∞
Quad I/O Fast Read	EBh	4-4-(4)	6	3(4)	1 to ∞
Quad I/O DTR Fast Read	EDh	4-4d-(4d)	6	3(4)	1 to ∞
Read Memory Operations with 4-Byte Address					
4-Byte Read Data Bytes at Higher Speed	0Ch	4-4-(4)	6	4	1 to ∞
4-Byte Quad Output Fast Read	6Ch	4-4-(4)	6	4	1 to ∞
4-Byte Quad I/O Fast Read	ECh	4-4-(4)	6	4	1 to ∞
4-Byte Quad I/O DTR Fast Read	EEh	4-4d-(4d)	6	4	1 to ∞
Write Operations					
Write Enable	06h	4-0-0	0	0	0
Write Disable	04h	4-0-0	0	0	0
Write Enable for Volatile Status Register	50h	4-0-0	0	0	0
Read Register Operations					
Read Status Register-1	05h	4-0-(4)	0	0	1 to ∞
Read Status Register-2	35h	4-0-(4)	0	0	1 to ∞
Read Nonvolatile Configuration Register	B5h	4-4-(4)	8	3(4)	1
Read Volatile Configuration Register	85h	4-4-(4)	8	3(4)	1
Read Extended Address Register	C8h	4-0-(4)	0	0	1 to ∞
QPI Mode Operation					
Disable QPI	FFh	4-0-0	0	0	0
Write Register Operations					
Write Status Register-1	01h	4-0-4	0	0	1
Write Status Register-2	31h	4-0-4	0	0	1
Write Nonvolatile Configuration Register	B1h	4-4-4	0	3(4)	1
Write Volatile Configuration Register	81h	4-4-4	0	3(4)	1
Write Extended Address Register	C5h	4-0-4	0	0	1
Program Operations					
Page Program	02h	4-4-4	0	3(4)	1 to 256
Quad Page Program	32h	4-4-4	0	3(4)	1 to 256
Extended Quad Page Program	C2h	4-4-4	0	3(4)	1 to 256
Program Operations with 4-Byte Address					

4-Byte Page Program	12h	4-4-4	0	4	1 to 256
4-Byte Quad Page Program	34h	4-4-4	0	4	1 to 256
4-Byte Extended Quad Page Program	3Eh	4-4-4	0	4	1 to 256
Erase Operations					
Sector Erase	20h	4-4-0	0	3(4)	0
32KB Block Erase	52h	4-4-0	0	3(4)	0
64KB Block Erase	D8h	4-4-0	0	3(4)	0
Chip Erase	C7h/60h	4-0-0	0	0	0
Erase Operations with 4-Byte Address					
4-Byte Sector Erase	21h	4-4-0	0	4	0
4-Byte 32KB Block Erase	5Ch	4-4-0	0	4	0
4-Byte 64KB Block Erase	DCh	4-4-0	0	4	0
Suspend/Resume Operations					
Program/Erase Suspend	75h	4-0-0	0	0	0
Program/Erase Resume	7Ah	4-0-0	0	0	0
One-Time Programmable (OTP) Operations					
Read Security Registers	48h	4-4-(4)	6	3(4)	1 to ∞
Program Security Registers	42h	4-4-4	0	3(4)	1 to 256
Erase Security Registers	44h	4-4-0	0	3(4)	0
4-ByteAddress Mode Operations					
Enable 4-Byte Address Mode	B7h	4-0-0	0	0	0
Disable 4-Byte Address Mode	E9h	4-0-0	0	0	0
Deep Power-Down Operations					
Deep Power-Down	B9h	4-0-0	0	0	0
Release From Deep Power-Down	ABh	4-0-0	0	0	0
Advanced Sector Protection Operations					
Individual Block/Sector Lock	36h	4-4-0	0	3(4)	0
Individual Block/Sector Unlock	39h	4-4-0	0	3(4)	0
Read Individual Block/Sector Lock	3Dh	4-4-(4)	8	3(4)	1
Global Block/Sector Lock	7Eh	4-0-0	0	0	0
Global Block/Sector Unlock	98h	4-0-0	0	0	0

Table of ID Definitions

GD25B512ME

Operation Code	M7-M0	ID23-ID16	ID15-ID8	ID7-ID0
9EH/9FH	C8	47	1A	FF

8.1 Enable 4-Byte Mode (B7H)

The Enable 4-Byte Mode command enables accessing the address length of 32-bit for the memory area of the higher density (larger than 128Mb). After sending the Enable 4-Byte Mode command, the ADS bit (S8) will be set to 1 to indicate the 4-Byte address mode has been enabled. Once the 4-Byte address mode is enabled, the address length becomes 32-bit.

Figure 9 Enable 4-Byte Mode Sequence Diagram (SPI)

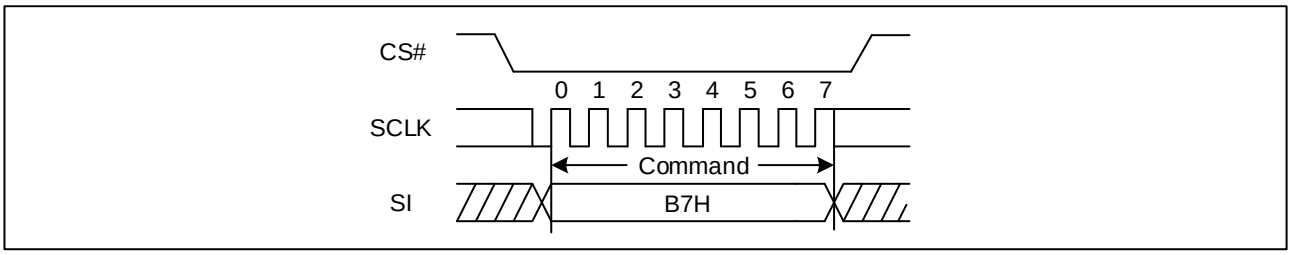

Figure 10 Enable 4-Byte Mode Sequence Diagram (QPI)

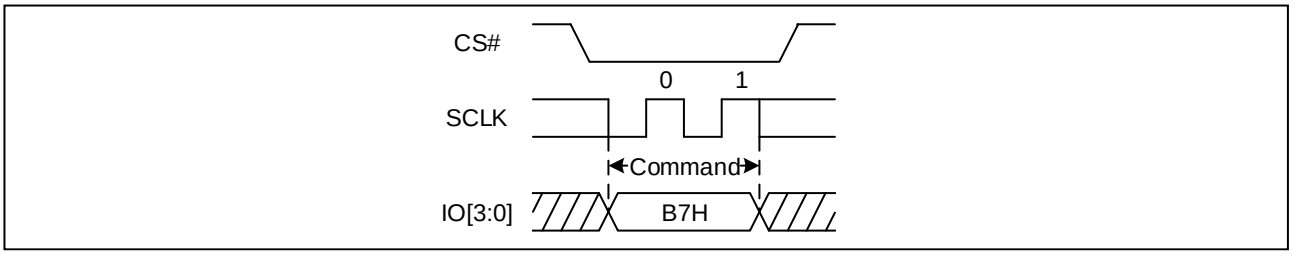

8.2 Disable 4-Byte Mode (E9H)

The Disable 4-Byte Mode command is executed to exit the 4-Byte address mode and enter the 3-Byte address mode. After sending the Disable 4-Byte Mode command, the ADS bit (S8) will be clear to be 0 to indicate the 4-Byte address mode has been disabled, and then the address length will return to 24-bit.

Figure 11 Disable 4-Byte Mode Sequence Diagram (SPI)

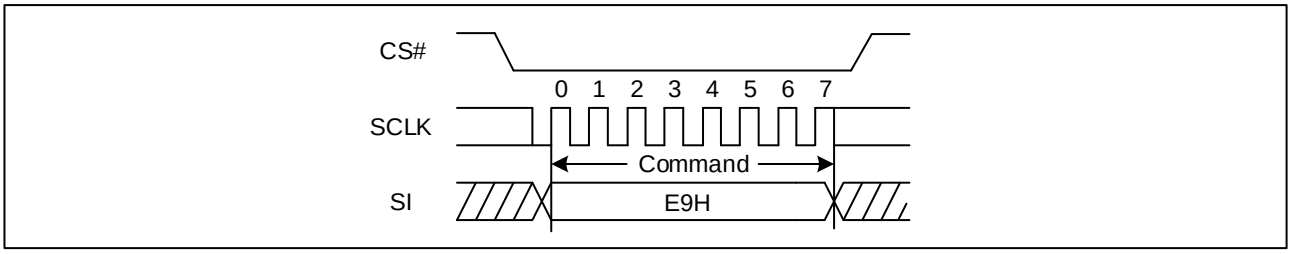

Figure 12 Disable 4-Byte Mode Sequence Diagram (QPI)

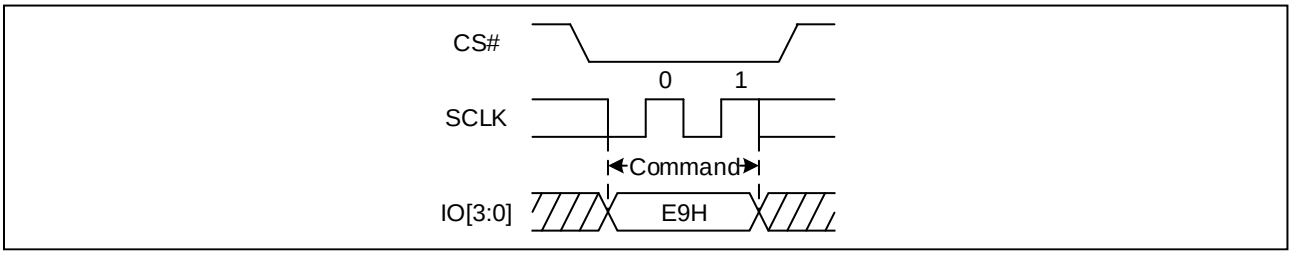

8.3 Write Enable (WREN) (06H)

The Write Enable (WREN) command is for setting the Write Enable Latch (WEL) bit. The Write Enable Latch (WEL) bit must be set prior to every Page Program (PP), Sector Erase (SE), Block Erase (BE), Chip Erase (CE), Write Status Register (WRSR), Write Extended Address Register (WEAR), Write Nonvolatile/Volatile configure register and Erase/Program Security Registers command. The Write Enable (WREN) command sequence: CS# goes low → sending the Write Enable command → CS# goes high.

Figure 13 Write Enable Sequence Diagram (SPI)

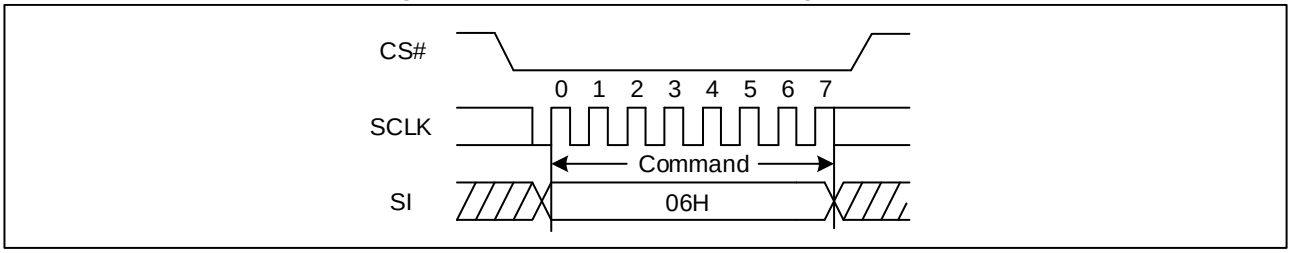

Figure 14 Write Enable Sequence Diagram (QPI)

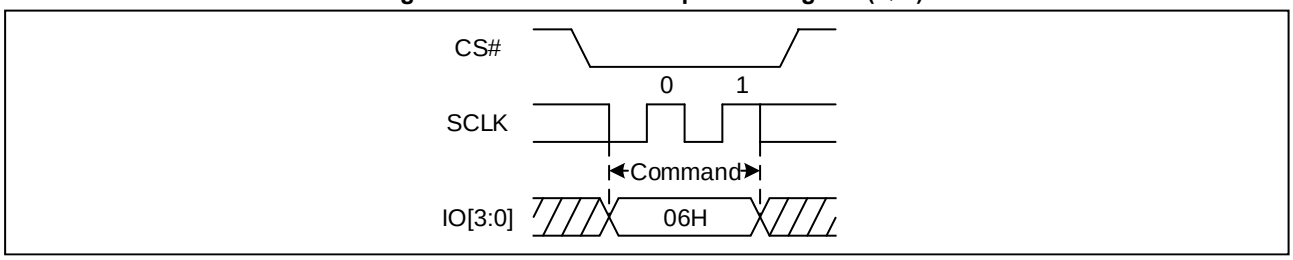

8.4 Write Disable (WRDI) (04H)

The Write Disable command is for resetting the Write Enable Latch (WEL) bit. The Write Disable command sequence: CS# goes low →Sending the Write Disable command →CS# goes high. The WEL bit is reset by following condition: Power-up and upon completion of the Write Status Register, Write Extended Address Register (WEAR), Write Nonvolatile/Volatile configure register, Page Program, Sector Erase, Block Erase, Chip Erase, Erase/Program Security Registers and Reset commands.

Figure 15 Write Disable Sequence Diagram (SPI)

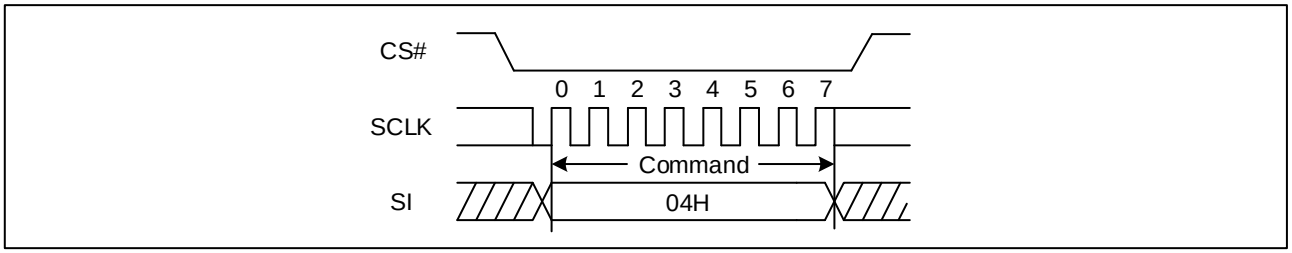

Figure 16 Write Disable Sequence Diagram (QPI)

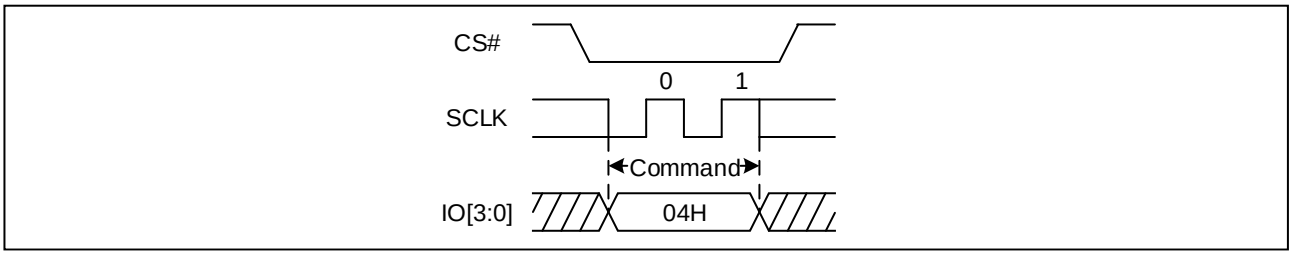

8.5 Write Enable for Volatile Status Register (50H)

The non-volatile Status Register bits can also be written to as volatile bits. This gives more flexibility to change the system configuration and memory protection schemes quickly without waiting for the typical non-volatile bit write cycles or affecting the endurance of the Status Register non-volatile bits. The Write Enable for Volatile Status Register command must be issued prior to a Write Status Register command, and any other commands cannot be inserted between them. Otherwise, Write Enable for Volatile Status Register will be cleared. The Write Enable for Volatile Status Register command will not set the Write Enable Latch bit, it is only valid for the Write Status Register command to change the volatile Status Register bit values.

Figure 17 Write Enable for Volatile Status Register Sequence Diagram (SPI)

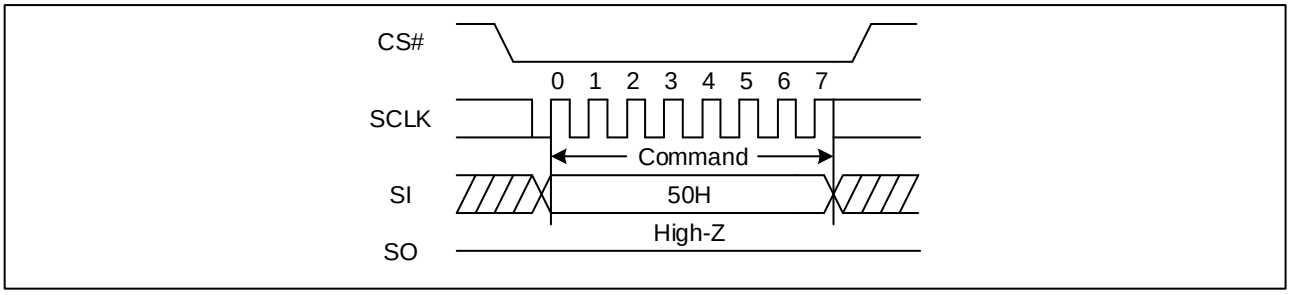

Figure 18 Write Enable for Volatile Status Register Sequence Diagram (QPI)

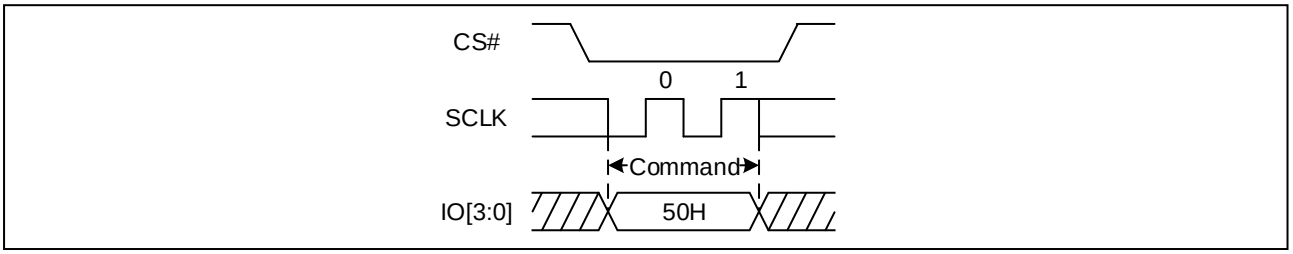

8.6 Write Status Register (WRSR) (01H/31H)

The Write Status Register (WRSR) command allows new values to be written to the Status Register. Before it can be accepted, a Write Enable (WREN) command must previously have been executed. After the Write Enable (WREN) command has been decoded and executed, the device sets the Write Enable Latch (WEL).

CS# must be driven high after the eighth of the data Byte has been latched in. Otherwise, the Write Status Register (WRSR) command is not executed. As soon as CS# is driven high, the self-timed Write Status Register cycle (whose duration is tW) is initiated. While the Write Status Register cycle is in progress, the Status Register may still be read to check the value of the Write In Progress (WIP) bit. The Write In Progress (WIP) bit is 1 during the self-timed Write Status Register cycle, and is 0 when it is completed. When the cycle is completed, the Write Enable Latch (WEL) is reset.

The Write Status Register (WRSR) command allows the user to change the values of the Block Protect (BP4, BP3, BP2, BP1, and BP0) bits, to define the size of the area that is to be treated as read-only. The Write Status Register (WRSR) command also allows the user to set or reset the Status Register Protect (SRP0) bit in accordance with the Write Protect (WP#) signal. The Status Register Protect (SRP1 and SRP0) bits and Write Protect (WP#) signal allow the device to be put in the Hardware Protected Mode. The Write Status Register (WRSR) command is not executed once the Hardware Protected Mode is entered.

Figure 19 Write Status Register Sequence Diagram (SPI)

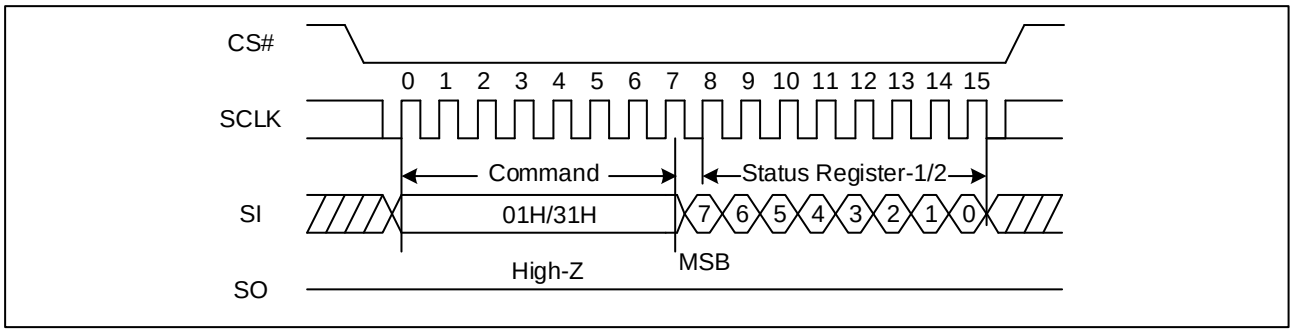

Figure 20 Write Status Register Sequence Diagram (QPI)

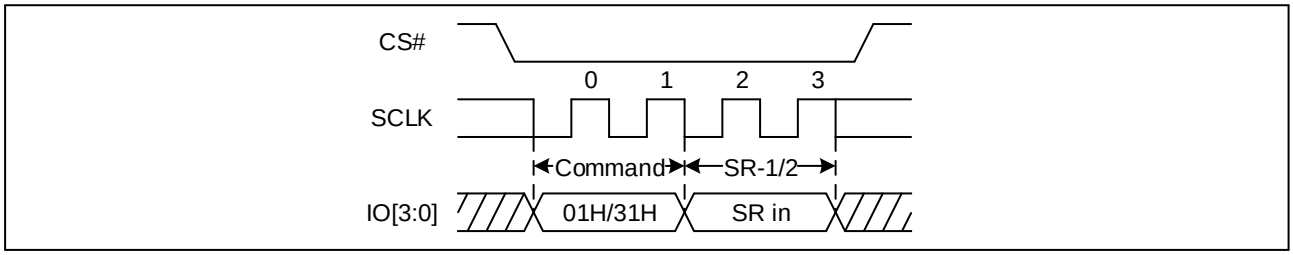

8.7 Write Extended Address Register (C5H)

The Extended Address Register is a volatile register that stores the 4th Byte address (A31-A24) when the device is operating in the 3-Byte Address Mode (ADS=0). To write the Extended Address Register bits, a Write Enable (06h) instruction must previously have been executed for the device to accept the Write Extended Address Register instruction (Status Register bit WEL must equal 1). Once write enabled, the instruction is entered by driving CS# low, sending the instruction code "C5H", and then writing the Extended Address Register data Byte.

Upon power up or the execution of a Software/Hardware Reset, the Extended Address Register bit values will be cleared to 0.

The Extended Address Bit is only effective when the device is in the 3-Byte Address Mode. When the device operates in the 4-Byte Address Mode (ADS=1), any command with address input of A31-A24 will replace the Extended Address Register values. It is recommended to check and update the Extended Address Register if necessary when the device is switched from 4-Byte to 3-Byte Address Mode.

Figure 21 Write Extended Address Register Sequence Diagram (SPI)

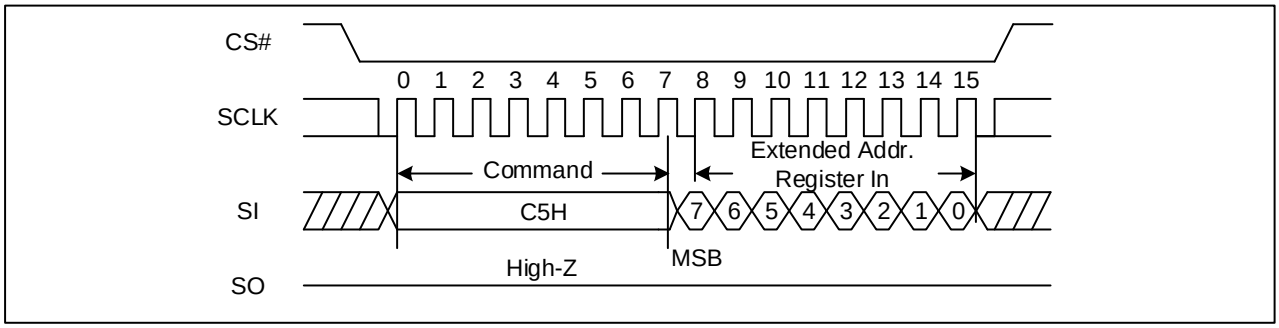

Figure 22 Write Extended Address Register Sequence Diagram (QPI)

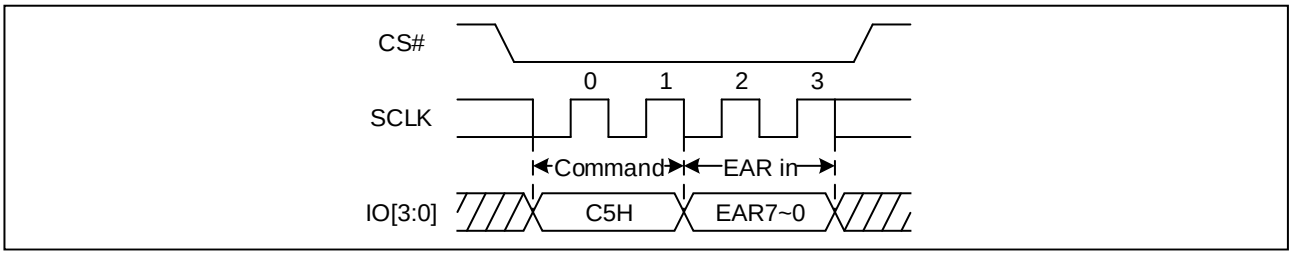

8.8 Write Nonvolatile/Volatile Configuration Register (B1H/81H)

The Write Nonvolatile/Volatile Configuration Register command allows new values to be written to the Nonvolatile/Volatile Configuration Register. Before it can be accepted, a Write Enable (WREN) command must previously have been executed. After the Write Enable (WREN) command has been decoded and executed, the device sets the Write Enable Latch (WEL). CS# must be driven high after the data Byte has been latched in. If not, the Write Configuration Register command is not executed. As soon as CS# is driven high, the self-timed Write Configuration Register cycle (whose duration is tW for B1H) is initiated. The Write In Progress (WIP) bit is 1 during the self-timed Write Configuration Register cycle, and is 0 when it is completed. When the cycle is completed, the Write Enable Latch (WEL) is reset.

Figure 23 Write Nonvolatile/Volatile Configuration Register Sequence Diagram (SPI)

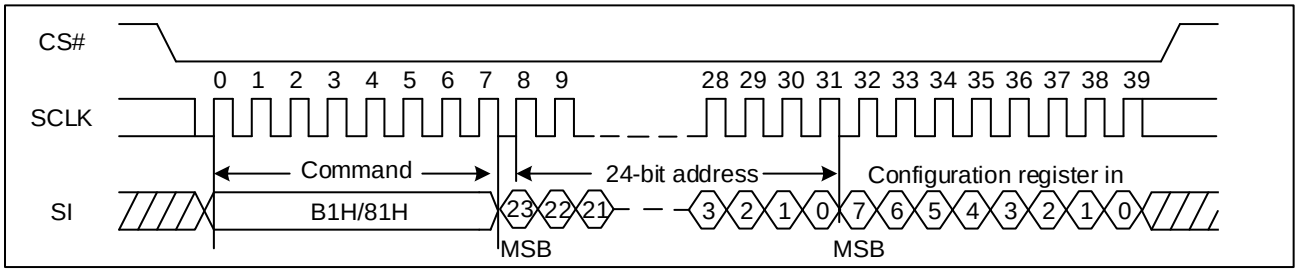

Note: The device default is in 24-bit address mode. For 4-Byte mode, the address length becomes 32-bit.

Figure 24 Write Nonvolatile/Volatile Configuration Register Sequence Diagram (QPI)

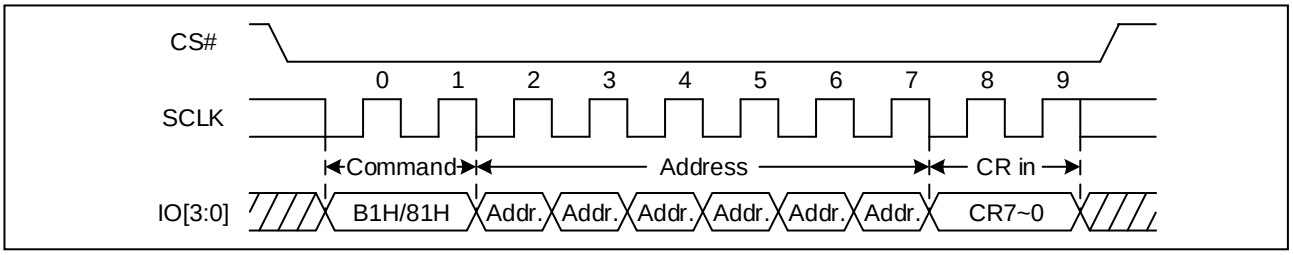

Note: The device default is in 24-bit address mode. For 4-Byte mode, the address length becomes 32-bit.

8.9 Read Status Register (05H/35H)

The Read Status Register command is for reading the Status Register. The Status Register may be read at any time, even while a Program, Erase or Write Status Register cycle is in progress. When one of these cycles is in progress, it is recommended to check the Write in Progress (WIP) bit before sending a new command to the device. It is also possible to read the Status Register continuously. For command code “05H”/“35H”, the SO will output Status Register bits S7~S0/S15~S8.

Figure 25 Read Status Register Sequence Diagram (SPI)

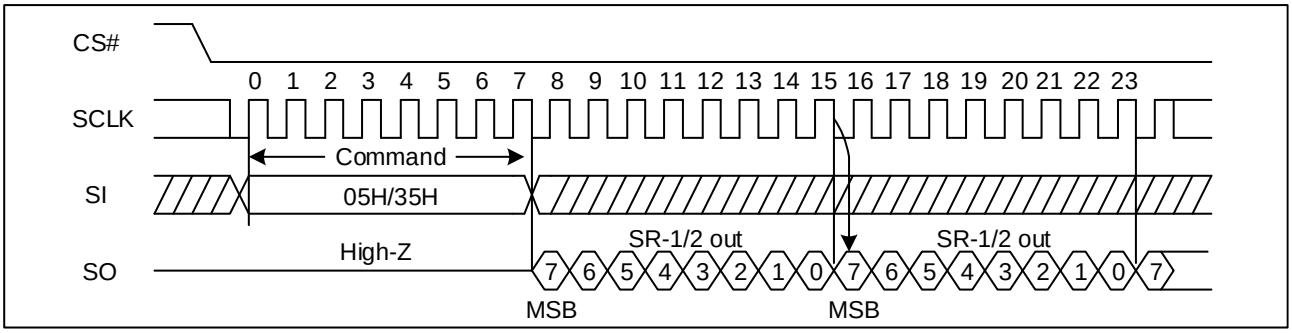

Figure 26 Read Status Register Sequence Diagram (QPI)

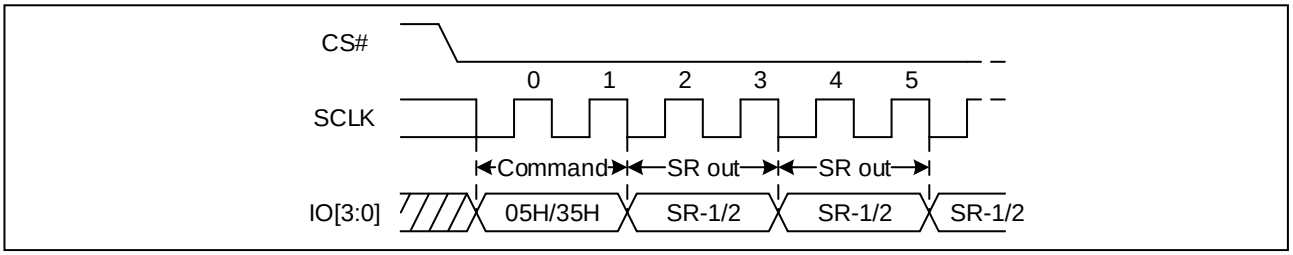

8.10 Read Nonvolatile/Volatile Configuration Register (B5H/85H)

The Read Nonvolatile/Volatile Configuration Register command is for reading the Nonvolatile/Volatile Configuration Registers. It is followed by a 3-Byte address (A23-A0) or a 4-Byte address (A31-A0) and a dummy Byte, and each bit is latched-in on the rising edge of SCLK. Then the Configuration Register, at that address, is shifted out on SO, and each bit is shifted out, at a Max frequency f_C, on the falling edge of SCLK. Read Nonvolatile/Volatile Configuration Register command, while an Erase, Program or Write cycle is in progress, is rejected without having any effects on the cycle that is in progress.

Figure 27 Read Configuration Registers Sequence Diagram (SPI)

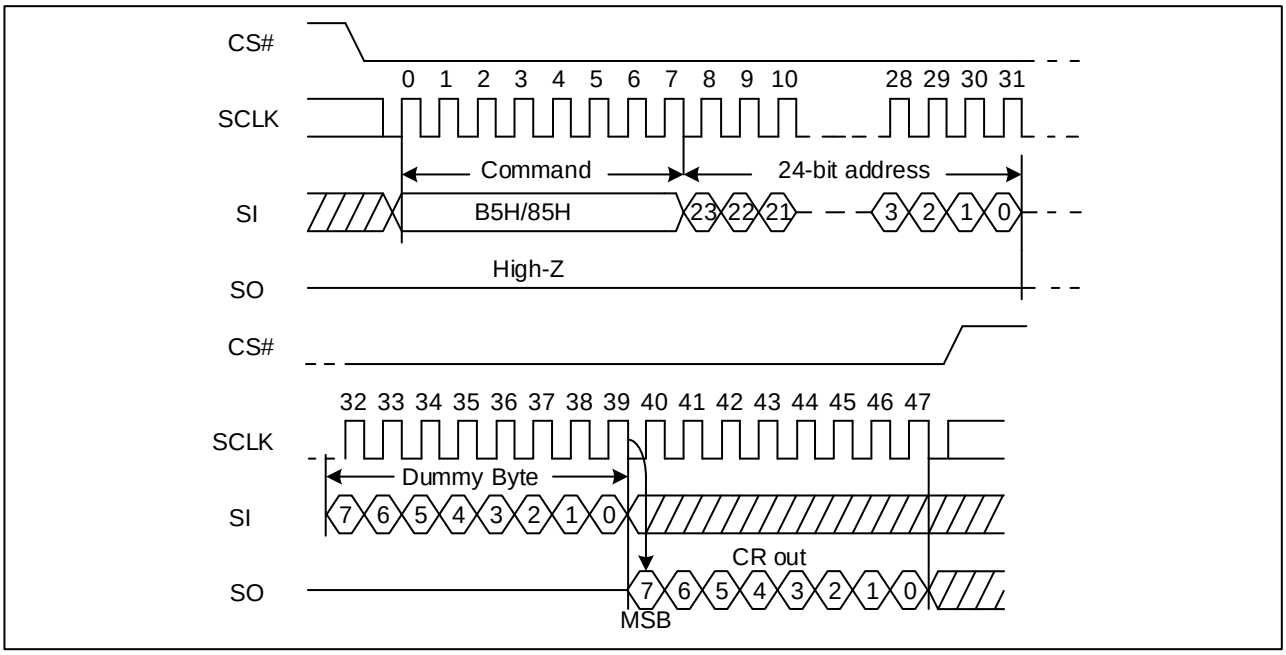

Note: The device default is in 24-bit address mode. For 4-Byte mode, the address length becomes 32-bit.

Figure 28 Read Configuration Registers Sequence (QPI)

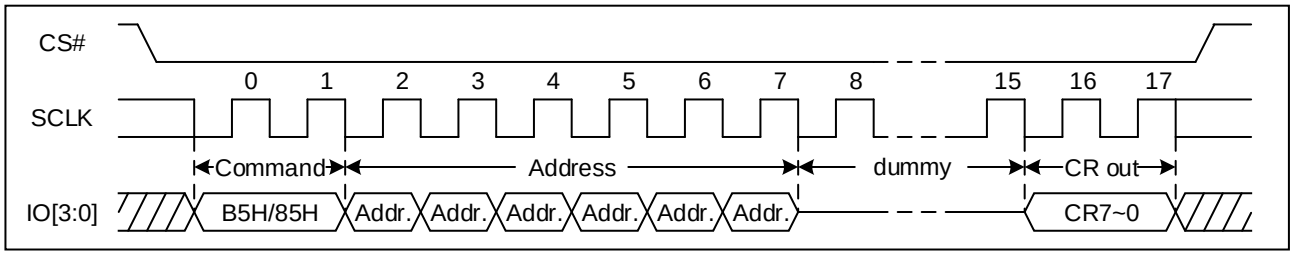

Note: The device default is in 24-bit address mode. For 4-Byte mode, the address length becomes 32-bit.

8.11 Read Extended Address Register (C8H)

The Read Extended Address Register instruction is entered by driving CS# low and shifting the instruction code “C8H” into the SI pin on the rising edge of SCLK. The Extended Address Register bits are then shifted out on the SO pin at the falling edge of SCLK with most significant bit (MSB) first.

When the device is in the 4-Byte Address Mode, the value of the address bits is ignored.

Figure 29 Read Extended Address Register Sequence Diagram (SPI)

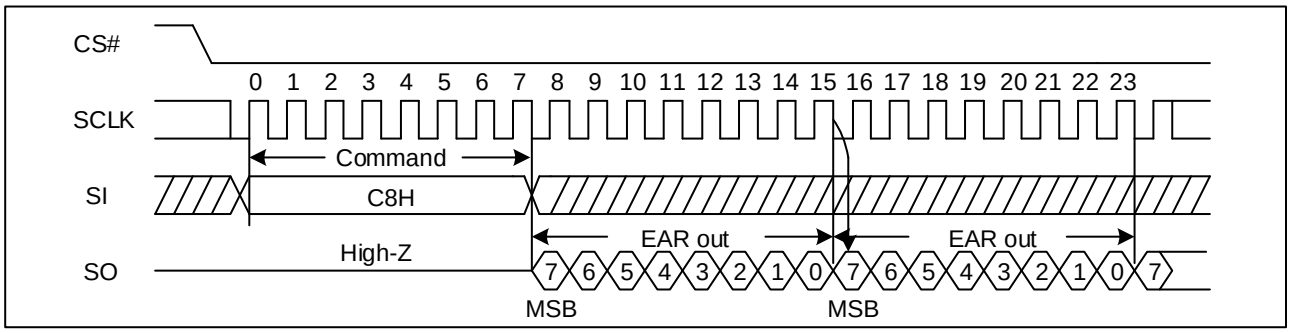

Figure 30 Read Extended Address Register Sequence Diagram (QPI)

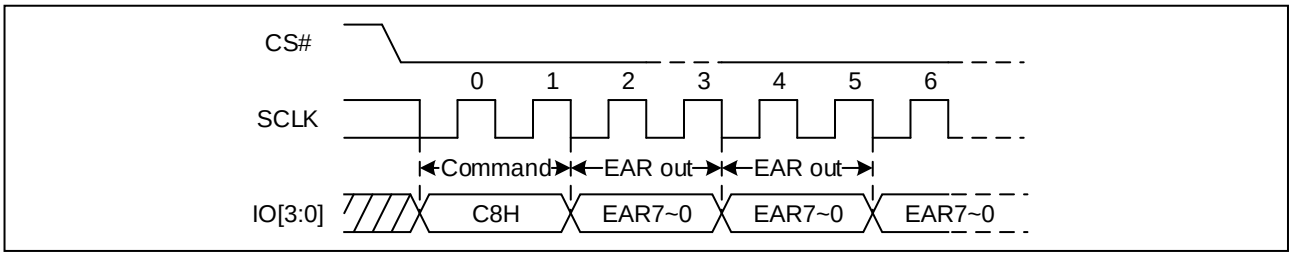

8.12 Read Data Bytes (03H/13H)

The Read Data Bytes (READ) command is followed by a 3-Byte address (A23-A0) or a 4-Byte address (A31-A0), and each bit is latched-in on the rising edge of SCLK. Then the memory content, at that address, is shifted out on SO, and each bit is shifted out, at a Max frequency fR, on the falling edge of SCLK. The first Byte addressed can be at any location. The address is automatically incremented to the next higher address after each Byte of data is shifted out. The whole memory can, therefore, be read with a single Read Data Bytes (READ) command. Any Read Data Bytes (READ) command, while an Erase, Program or Write cycle is in progress, is rejected without having any effects on the cycle that is in progress.

Figure 31 Read Data Bytes Sequence Diagram

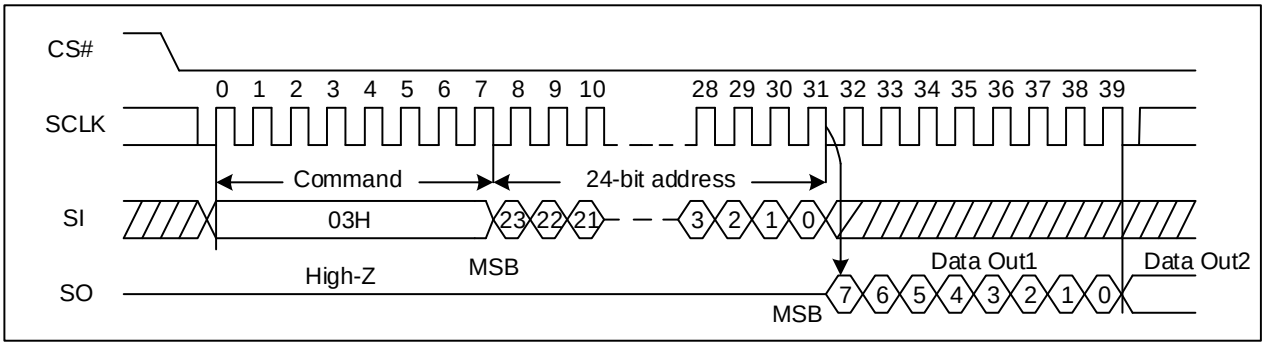

Note: The device default is in 24-bit address mode. For 4-Byte mode, the address length becomes 32-bit.

8.13 Read Data Bytes at Higher Speed (0BH/0CH)

The Read Data Bytes at Higher Speed (Fast Read) command is for quickly reading data out. It is followed by a 3-Byte address (A23-A0) or a 4-Byte address (A31-A0) and dummy clocks, and each bit is latched-in on the rising edge of SCLK. Then the memory content, at that address, is shifted out on SO, and each bit is shifted out, at a Max frequency f_C, on the falling edge of SCLK. The first Byte addressed can be at any location. The address is automatically incremented to the next higher address after each Byte of data is shifted out.

Figure 32 Read Data Bytes at Higher Speed Sequence Diagram (SPI)

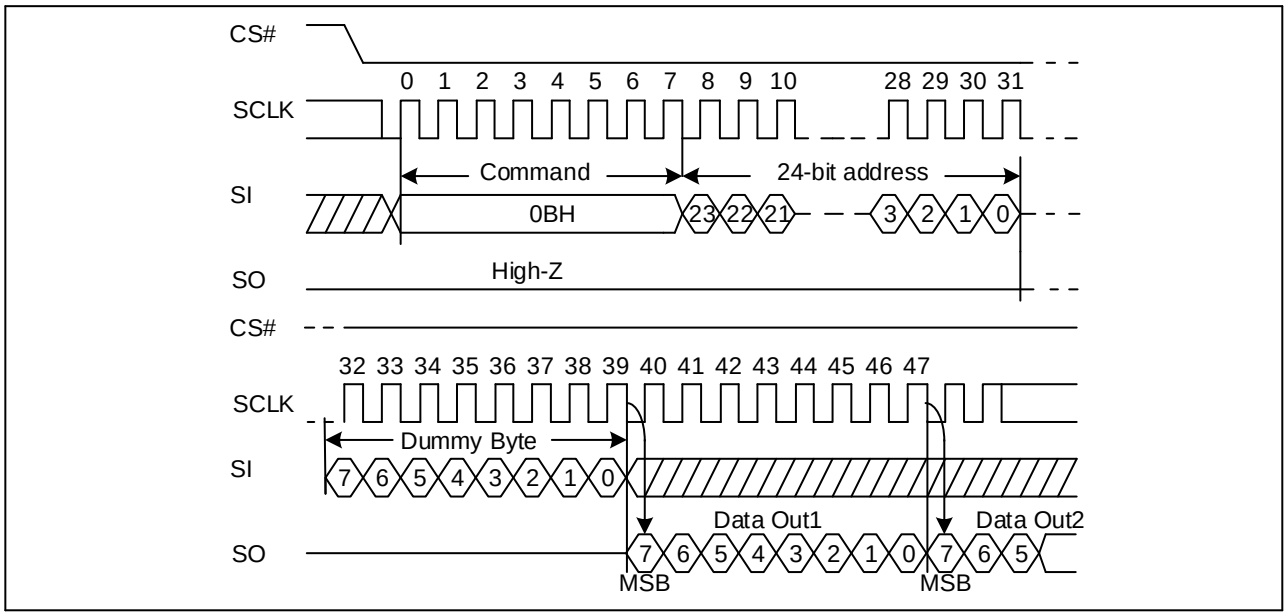

Note: The device default is in 24-bit address mode. For 4-Byte mode, the address length becomes 32-bit.

Figure 33 Read Data Bytes at Higher Speed Sequence Diagram (QPI)

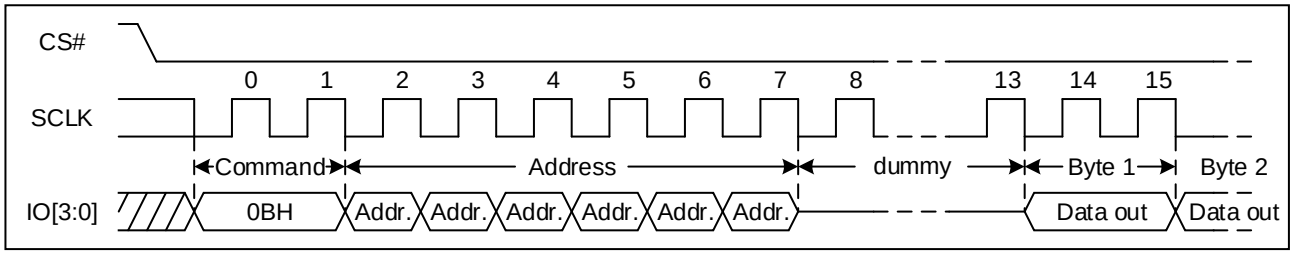

Note: The device default is in 24-bit address mode. For 4-Byte mode, the address length becomes 32-bit.

8.14 Quad Output Fast Read (6BH/6CH)

The Quad Output Fast Read command is followed by 3-Byte address (A23-A0) or a 4-Byte address (A31-A0) and dummy clocks, and each bit is latched in on the rising edge of SCLK, then the memory contents are shifted out 4-bit per clock cycle from IO3, IO2, IO1 and IO0. The first Byte addressed can be at any location. The address is automatically incremented to the next higher address after each Byte of data is shifted out.

Figure 34 Quad Output Fast Read Sequence Diagram (SPI)

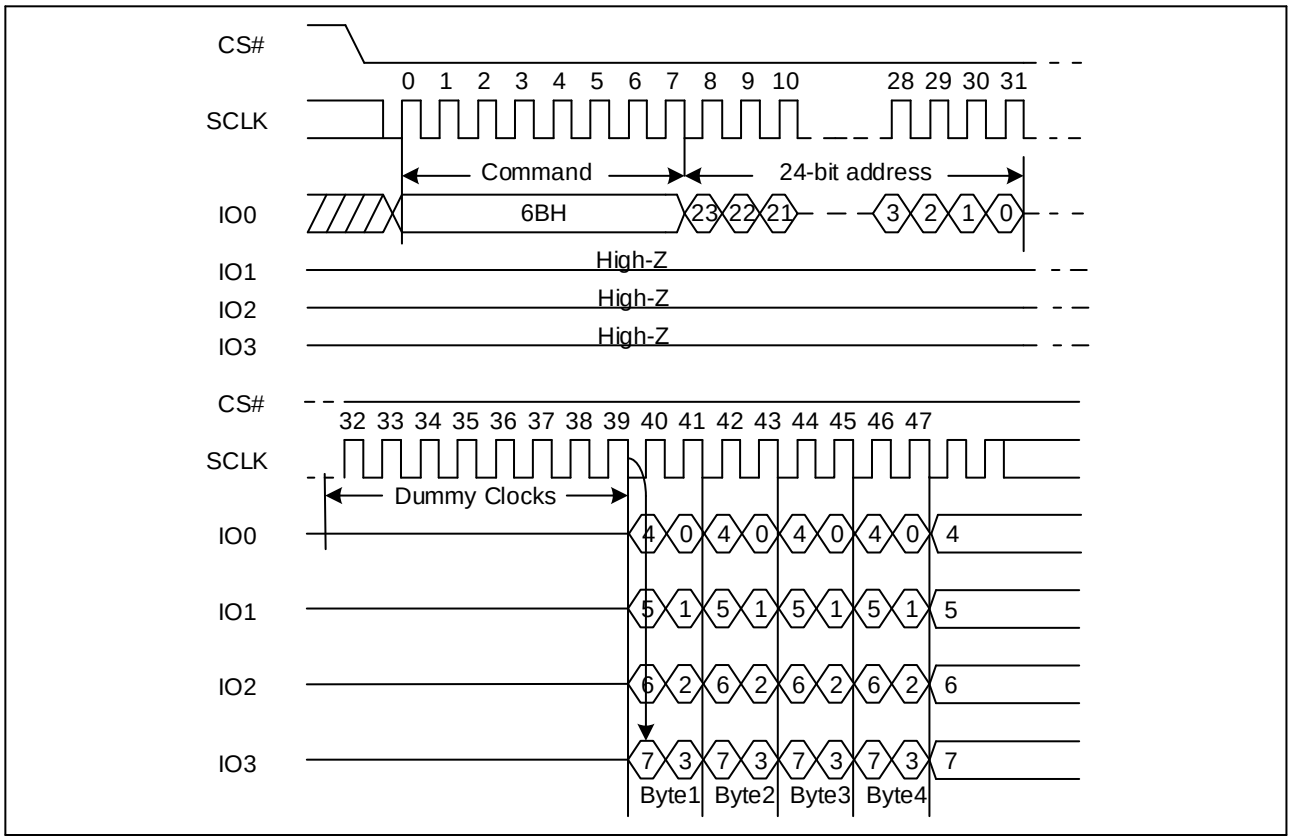

Note: The device default is in 24-bit address mode. For 4-Byte mode, the address length becomes 32-bit.

Figure 35 Quad Output Fast Read Sequence Diagram (QPI)

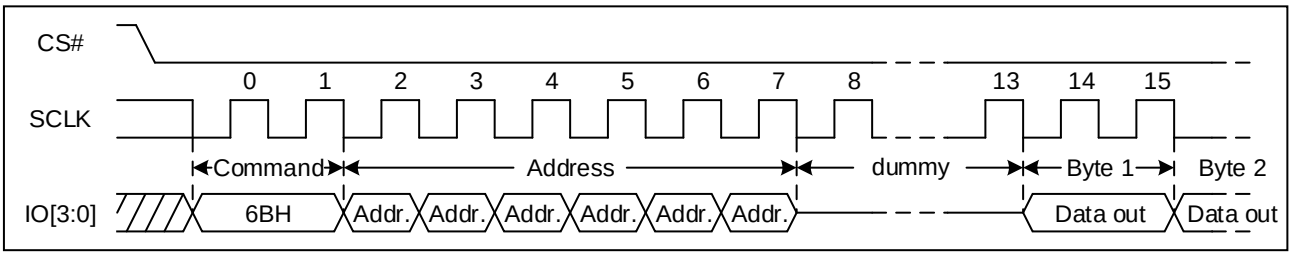

Note: The device default is in 24-bit address mode. For 4-Byte mode, the address length becomes 32-bit.

8.15 Quad I/O Fast Read (EBH/ECH)

The Quad I/O Fast Read command is similar to the Quad Output Fast Read command but with the capability to input the 3-Byte address (A23-0) or a 4-Byte address (A31-A0) and a “Continuous Read Mode” Byte and dummy clocks. 4-bit per clock is transferred by IO0, IO1, IO2, IO3, and each bit is latched in on the rising edge of SCLK, then the memory contents are shifted out 4-bit per clock cycle from IO0, IO1, IO2, IO3. The first Byte addressed can be at any location. The address is automatically incremented to the next higher address after each Byte of data is shifted out.

Quad I/O Fast Read with "Continuous Read Mode"

The Quad I/O Fast Read command can further reduce command overhead through setting the "Continuous Read Mode" bits (M7-0) after the input 3-Byte address (A23-A0) or 4-Byte address (A31-A0). If the "Continuous Read Mode" bits (M5-4) = (1, 0), then the next Quad I/O Fast Read command (after CS# is raised and then lowered) does not require the EBH/ECH command code. If the "Continuous Read Mode" bits (M5-4) do not equal to (1, 0), the next command requires the command code, thus returning to normal operation. The only way to quit the Quad I/O Continuous Read Mode" is to set the "Continuous Read Mode" bits (M5-4) not equal to (1, 0).

Figure 36 Quad I/O Fast Read Sequence Diagram (SPI, M5-4≠ (1, 0))

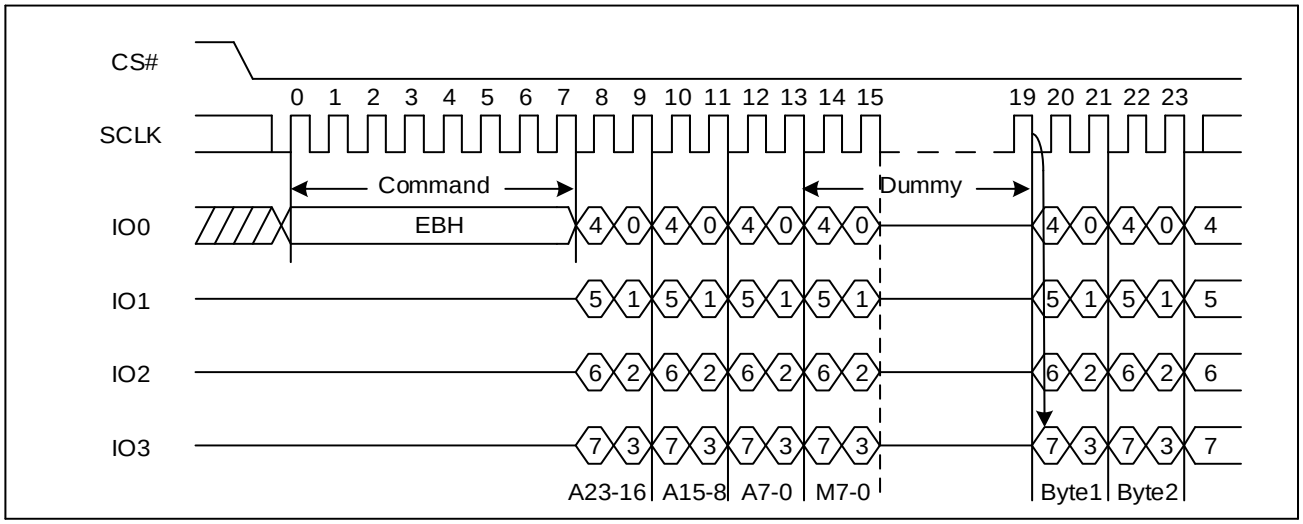

Note: The device default is in 24-bit address mode. For 4-Byte mode, the address length becomes 32-bit.

Figure 37 Quad I/O Fast Read Sequence Diagram (QPI, M5-4≠ (1, 0))

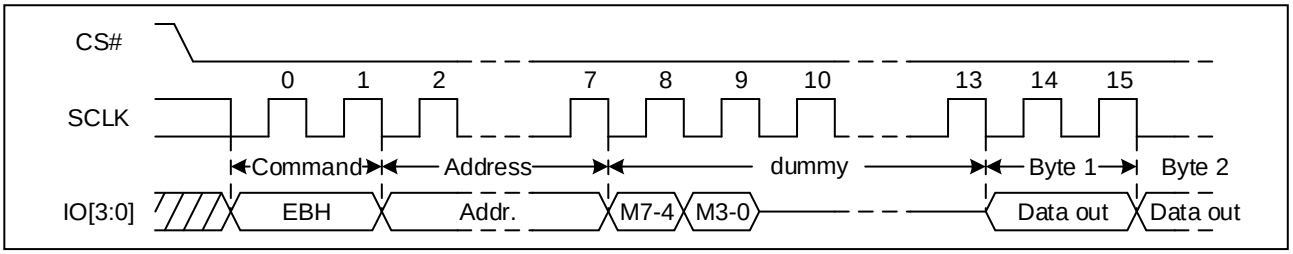

Note: The device default is in 24-bit address mode. For 4-Byte mode, the address length becomes 32-bit.

Figure 38 Quad I/O Fast Read Sequence Diagram (QPI, M5-4= (1, 0))

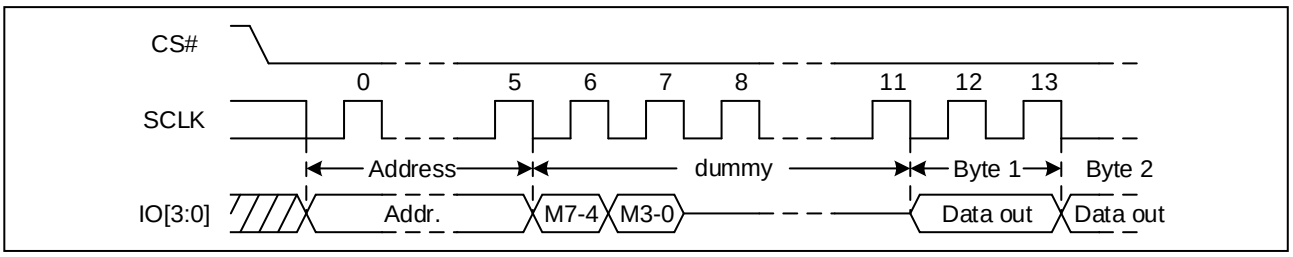

Note: The device default is in 24-bit address mode. For 4-Byte mode, the address length becomes 32-bit.

Quad I/O Fast Read with "16/32/64-Byte Wrap Around"

The Quad I/O Fast Read command can be used to access a specific portion within a page by issuing Wrap configuration register Byte prior to EBH/ECH. The data being accessed can be limited to either a 16/32/64-Byte section of a 256-Byte page. The output data starts at the initial address specified in the command, once it reaches the ending boundary of the

16/32/64-Byte section, the output will wrap around the beginning boundary automatically until CS# is pulled high to terminate the command.

The Burst with Wrap feature allows applications that use cache to quickly fetch a critical address and then fill the cache afterwards within a fixed length (16/32/64-Byte) of data without issuing multiple read commands.

8.16 Quad I/O DTR Read (EDH/EEH)

The Quad I/O DTR Read instruction enables Double Transfer Rate throughput on quad I/O of Serial Flash in read mode. The address (interleave on 4 I/O pins) is latched on both rising and falling edge of SCLK, and data (interleave on 4 I/O pins) shift out on both rising and falling edge of SCLK. The 8-bit address can be latched-in at one clock, and 8-bit data can be read out at one clock, which means four bits at rising edge of clock, the other four bits at falling edge of clock. The first address Byte can be at any location. The address is automatically increased to the next higher address after each Byte data is shifted out, so the whole memory can be read out at a single Quad I/O DTR Read command. The address counter rolls over to 0 when the highest address has been reached.

While Program/Erase/Write Status Register cycle is in progress, Quad I/O DTR Read command is rejected without any impact on the Program/Erase/Write Status Register current cycle.

Figure 39. DTR Quad I/O Fast Read Sequence Diagram (SPI, M5-4 ≠ (1, 0))

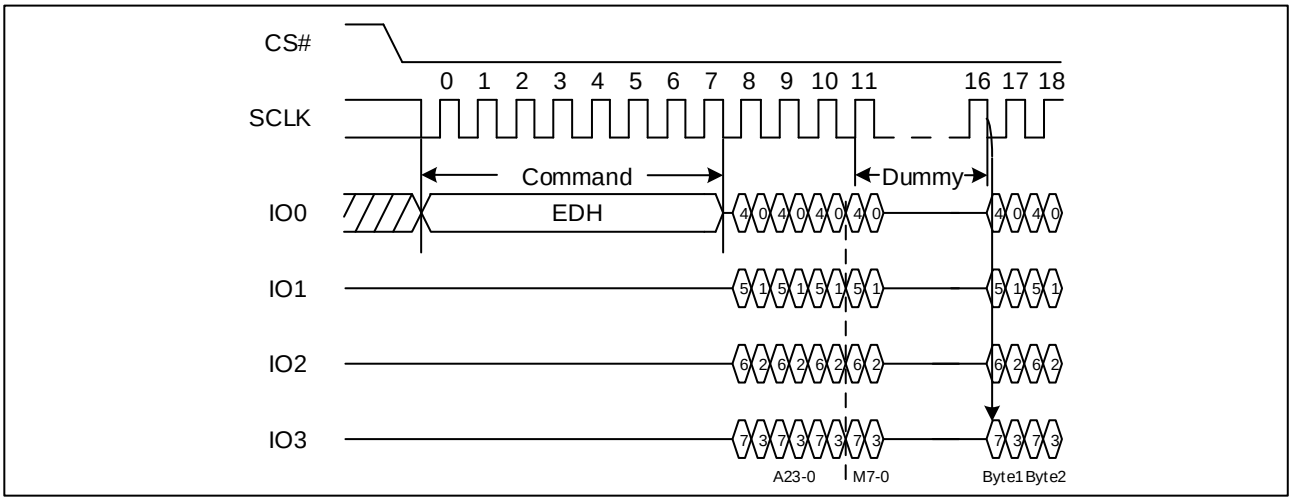

Note: The device default is in 24-bit address mode. For 4-Byte mode, the address length becomes 32-bit.

Figure 40. DTR Quad I/O Fast Read Sequence Diagram (QPI, M5-4 ≠ (1, 0))

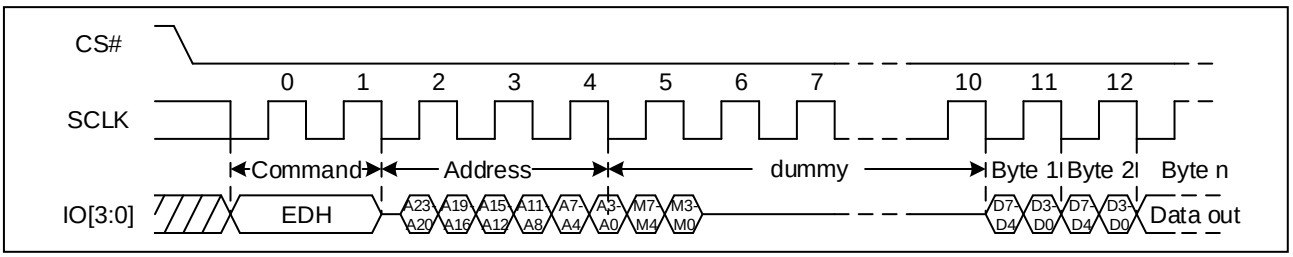

Note: The device default is in 24-bit address mode. For 4-Byte mode, the address length becomes 32-bit.

Quad I/O DTR Read with "Continuous Read Mode"

The Quad I/O DTR Read command can further reduce command overhead through setting the "Continuous Read Mode" bits (M7-0) after the input address. If the "Continuous Read Mode" bits (M5-4) = (1, 0), then the next Quad I/O DTR Read command (after CS# is raised and then lowered) does not require the EDH/EEH command code. If the "Continuous Read

Mode" bits (M5-4) do not equal to (1, 0), the next command requires the first EDH/EEH command code, thus returning to normal operation. The only way to quit the Quad I/O DTR Continuous Read Mode" is to set the "Continuous Read Mode" bits (M5-4) not equal to (1, 0).

Figure 41. DTR Quad I/O Fast Read Sequence Diagram (M5-4 = (1, 0))

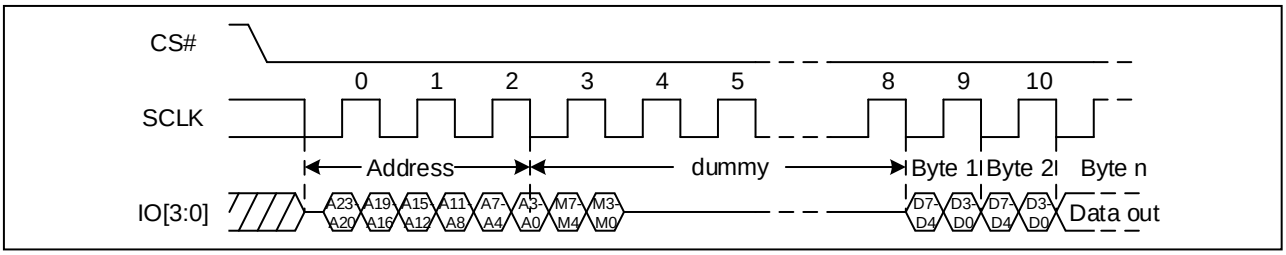

Note: The device default is in 24-bit address mode. For 4-Byte mode, the address length becomes 32-bit.

Quad I/O DTR Fast Read with "16/32/64-Byte Wrap Around"

The Quad I/O DTR Fast Read command can be used to access a specific portion within a page by issuing Wrap configuration register Byte prior to EDH/EEH. The data being accessed can be limited to either a 16/32/64-Byte section of a 256-Byte page. The output data starts at the initial address specified in the command, once it reaches the ending boundary of the 16/32/64-Byte section, the output will wrap around the beginning boundary automatically until CS# is pulled high to terminate the command.

The Burst with Wrap feature allows applications that use cache to quickly fetch a critical address and then fill the cache afterwards within a fixed length (16/32/64-Byte) of data without issuing multiple read commands.

8.17 Page Program (PP) (02H/12H)

The Page Program (PP) command is for programming the memory. A Write Enable (WREN) command must previously have been executed to set the Write Enable Latch (WEL) bit before sending the Page Program command.

The Page Program (PP) command is entered by driving CS# Low, followed by the command code, three or four address Bytes and at least one data Byte on SI. If the 8 least significant address bits (A7-A0) are not all zero, all transmitted data that goes beyond the end of the current page are programmed from the start address of the same page (from the address whose 8 least significant bits (A7-A0) are all zero). CS# must be driven low for the entire duration of the sequence. The Page Program command sequence: CS# goes low → sending Page Program command → 3-Byte address or 4-Byte address on SI → at least 1 Byte data on SI → CS# goes high. If more than 256 Bytes are sent to the device, previously latched data are discarded and the last 256 data Bytes are guaranteed to be programmed correctly within the same page. If less than 256 data Bytes are sent to device, they are correctly programmed at the requested addresses without having any effects on the other Bytes of the same page. CS# must be driven high after the eighth bit of the last data Byte has been latched in; otherwise the Page Program (PP) command is not executed.

As soon as CS# is driven high, the self-timed Page Program cycle (whose duration is t_{PP}) is initiated. While the Page Program cycle is in progress, the Status Register may be read to check the value of the Write in Progress (WIP) bit. The Write in Progress (WIP) bit is 1 during the self-timed Page Program cycle, and is 0 when it is completed. At some unspecified time before the cycle is completed, the Write Enable Latch (WEL) bit is reset.

A Page Program (PP) command applied to a page which is protected by the Block Protect (BP4, BP3, BP2, BP1, and BP0) is not executed.

Figure 42 Page Program Sequence Diagram (SPI)

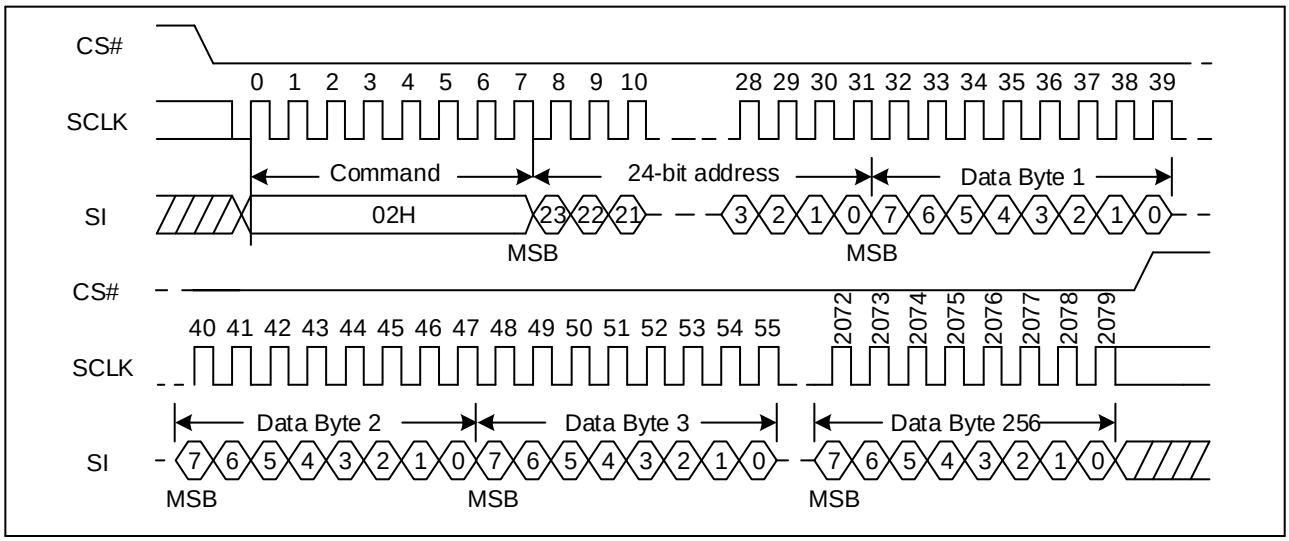

Note: The device default is in 24-bit address mode. For 4-Byte mode, the address length becomes 32-bit.

Figure 43 Page Program Sequence Diagram (QPI)

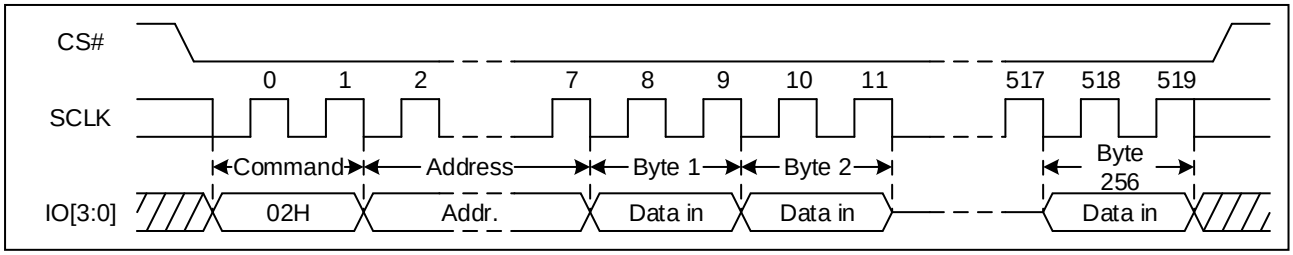

Note: The device default is in 24-bit address mode. For 4-Byte mode, the address length becomes 32-bit.

8.18 Quad Page Program (32H/34H)

The Quad Page Program command is for programming the memory using four pins: IO0, IO1, IO2, and IO3. A Write Enable (WREN) command must previously have been executed to set the Write Enable Latch (WEL) bit before sending the Page Program command. The quad Page Program command is entered by driving CS# Low, followed by the command code (32H/34H), three or four address Bytes and at least one data Byte on IO pins.

If more than 256 Bytes are sent to the device, previously latched data are discarded and the last 256 data Bytes are guaranteed to be programmed correctly within the same page. If less than 256 data Bytes are sent to device, they are correctly programmed at the requested addresses without having any effects on the other Bytes of the same page. CS# must be driven high after the eighth bit of the last data Byte has been latched in; otherwise the Quad Page Program (PP) command is not executed.

As soon as CS# is driven high, the self-timed Quad Page Program cycle (whose duration is t_{PP}) is initiated. While the Quad Page Program cycle is in progress, the Status Register may be read to check the value of the Write In Progress (WIP) bit. The Write in Progress (WIP) bit is 1 during the self-timed Quad Page Program cycle, and is 0 when it is completed. At some unspecified time before the cycle is completed, the Write Enable Latch (WEL) bit is reset.

A Quad Page Program command applied to a page which is protected by the Block Protect (BP4, BP3, BP2, BP1, and BP0) is not executed.

Figure 44 Quad Page Program Sequence Diagram (SPI)

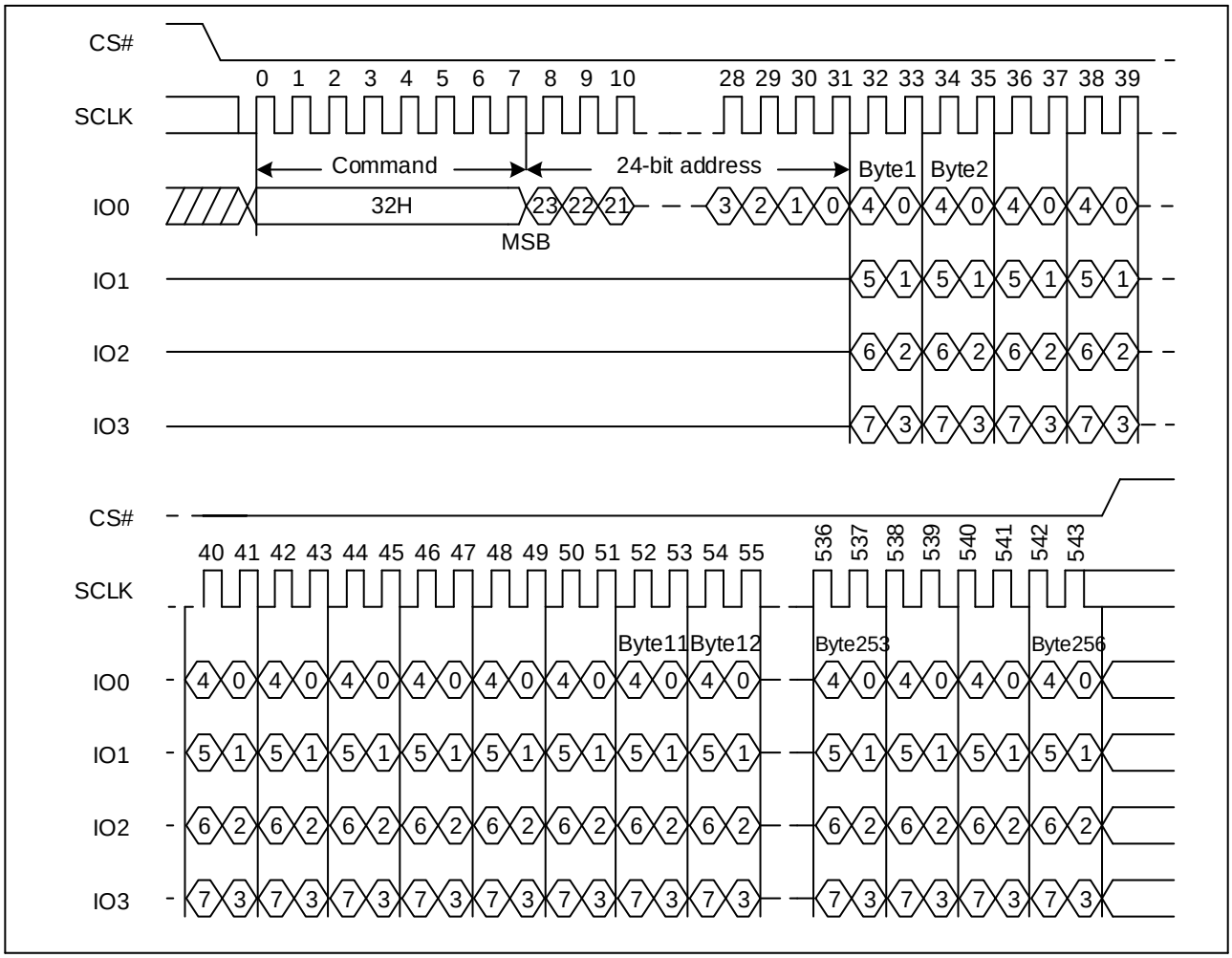

Note: The device default is in 24-bit address mode. For 4-Byte mode, the address length becomes 32-bit.

Figure 45 Quad Page Program Sequence Diagram (QPI)

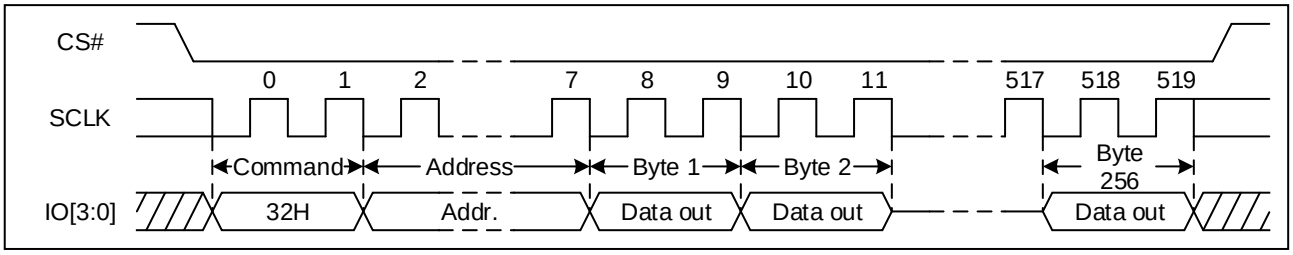

Note: The device default is in 24-bit address mode. For 4-Byte mode, the address length becomes 32-bit.

8.19 Extend Quad Page Program (C2H/3EH)

The Extend Quad Page Program command is for programming the memory using four pins: IO0, IO1, IO2, and IO3. A Write Enable (WREN) command must previously have been executed to set the Write Enable Latch (WEL) bit before sending the Page Program command. The extend quad Page Program command is entered by driving CS# Low, followed by the command code (C2H/3EH), three or four address Bytes and at least one data Byte on IO pins.

If more than 256 Bytes are sent to the device, previously latched data are discarded and the last 256 data Bytes are guaranteed to be programmed correctly within the same page. If less than 256 data Bytes are sent to device, they are

correctly programmed at the requested addresses without having any effects on the other Bytes of the same page. CS# must be driven high after the eighth bit of the last data Byte has been latched in; otherwise the Extend Quad Page Program (EPP) command is not executed.

As soon as CS# is driven high, the self-timed Extend Quad Page Program cycle (whose duration is tPP) is initiated. While the Extend Quad Page Program cycle is in progress, the Status Register may be read to check the value of the Write In Progress (WIP) bit. The Write in Progress (WIP) bit is 1 during the self-timed Extend Quad Page Program cycle, and is 0 when it is completed. At some unspecified time before the cycle is completed, the Write Enable Latch (WEL) bit is reset.

An Extend Quad Page Program command applied to a page which is protected by the Block Protect (BP4, BP3, BP2, BP1, and BP0) is not executed.

Figure 46 Extend Quad Page Program Sequence Diagram (SPI)

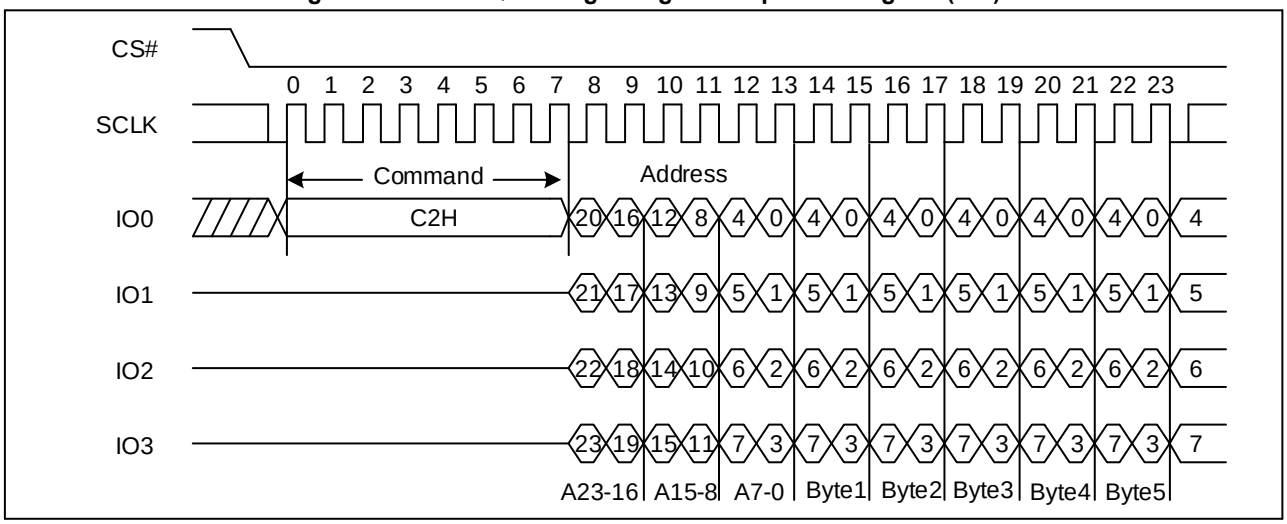

Note: The device default is in 24-bit address mode. For 4-Byte mode, the address length becomes 32-bit.

Figure 47 Extend Quad Page Program Sequence Diagram (QPI)

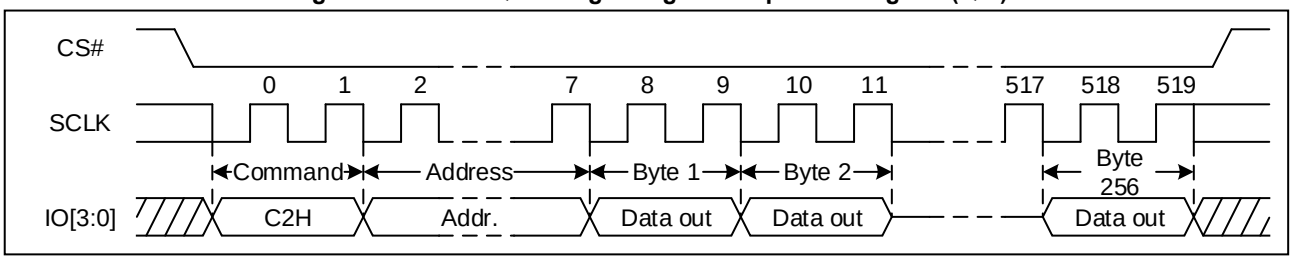

Note: The device default is in 24-bit address mode. For 4-Byte mode, the address length becomes 32-bit.

8.20 Sector Erase (SE) (20H/21H)

The Sector Erase (SE) command is erased the all data of the chosen sector. A Write Enable (WREN) command must previously have been executed to set the Write Enable Latch (WEL) bit. The Sector Erase (SE) command is entered by driving CS# low, followed by the command code, and 3- Byte address or 4-Byte address on SI. Any address inside the sector is a valid address for the Sector Erase (SE) command. CS# must be driven low for the entire duration of the sequence.

The Sector Erase command sequence: CS# goes low → sending Sector Erase command → 3-Byte address or 4-Byte address on SI → CS# goes high. CS# must be driven high after the eighth bit of the last address Byte has been latched in; otherwise the Sector Erase (SE) command is not executed. As soon as CS# is driven high, the self-timed Sector Erase cycle (whose duration is t_{SE}) is initiated. While the Sector Erase cycle is in progress, the Status Register may be read to check the value of the Write in Progress (WIP) bit. The Write in Progress (WIP) bit is 1 during the self-timed Sector Erase

cycle, and is 0 when it is completed. At some unspecified time before the cycle is completed, the Write Enable Latch (WEL) bit is reset. A Sector Erase (SE) command applied to a sector which is protected by the Block Protect (BP4, BP3, BP2, BP1, and BP0) bits is not executed.

Figure 48 Sector Erase Sequence Diagram (SPI)

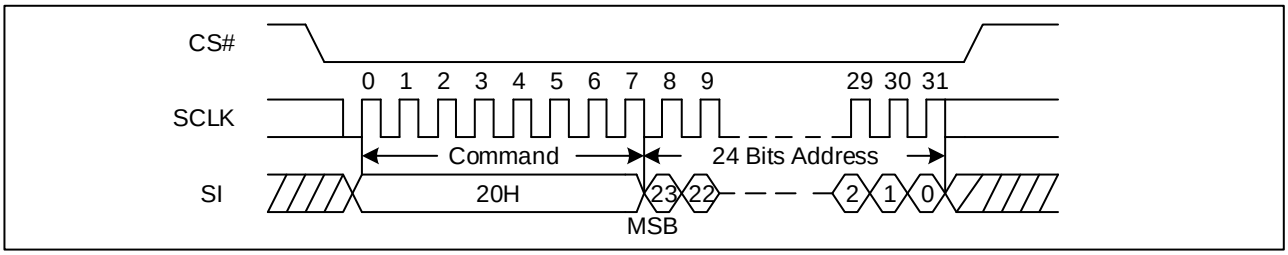

Note: The device default is in 24-bit address mode. For 4-Byte mode, the address length becomes 32-bit.

Figure 49 Sector Erase Sequence Diagram (QPI)

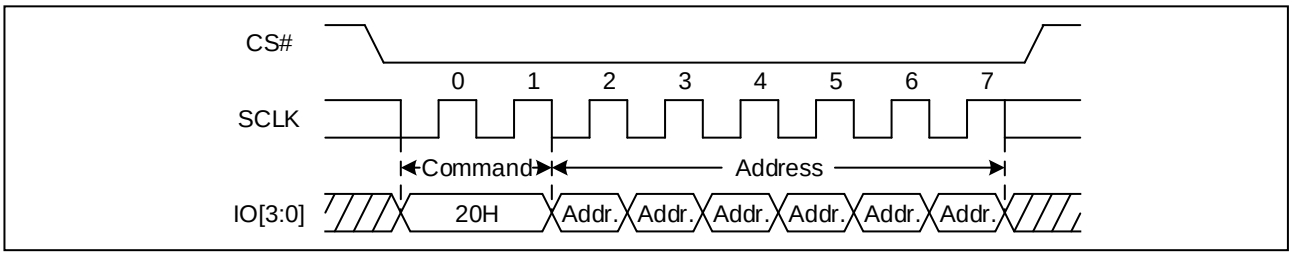

Note: The device default is in 24-bit address mode. For 4-Byte mode, the address length becomes 32-bit.

8.21 32KB Block Erase (BE32) (52H/5CH)

The 32KB Block Erase command is erased the all data of the chosen block. A Write Enable (WREN) command must previously have been executed to set the Write Enable Latch (WEL) bit. The 32KB Block Erase (BE) command is entered by driving CS# low, followed by the command code, and 3-Byte address or 4-Byte address on SI. Any address inside the block is a valid address for the 32KB Block Erase command. CS# must be driven low for the entire duration of the sequence. The 32KB Block Erase command sequence: CS# goes low → sending 32KB Block Erase command → 3-Byte address or 4-Byte address on SI → CS# goes high. CS# must be driven high after the eighth bit of the last address Byte has been latched in; otherwise the 32KB Block Erase command is not executed. As soon as CS# is driven high, the self-timed Block Erase cycle (whose duration is t_{BE1}) is initiated. While the Block Erase cycle is in progress, the Status Register may be read to check the value of the Write in Progress (WIP) bit. The Write in Progress (WIP) bit is 1 during the self-timed Block Erase cycle, and is 0 when it is completed. At some unspecified time before the cycle is completed, the Write Enable Latch (WEL) bit is reset. A 32KB Block Erase command applied to a block which is protected by the Block Protect (BP4, BP3, BP2, BP1, and BP0) bits is not executed.

Figure 50 32KB Block Erase Sequence Diagram (SPI)

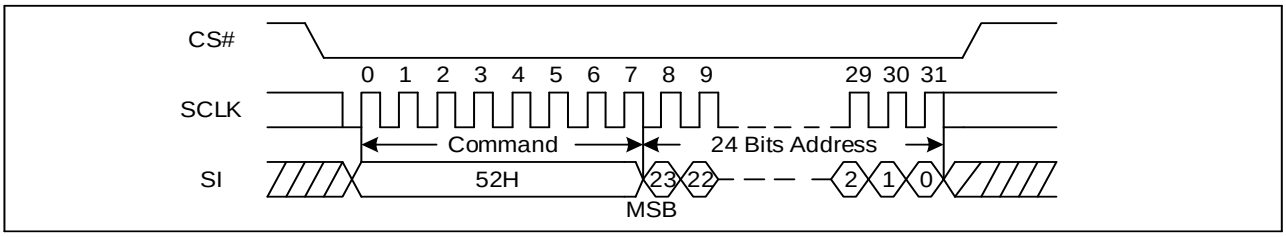

Note: The device default is in 24-bit address mode. For 4-Byte mode, the address length becomes 32-bit.

Figure 51 32KB Block Erase Sequence Diagram (QPI)

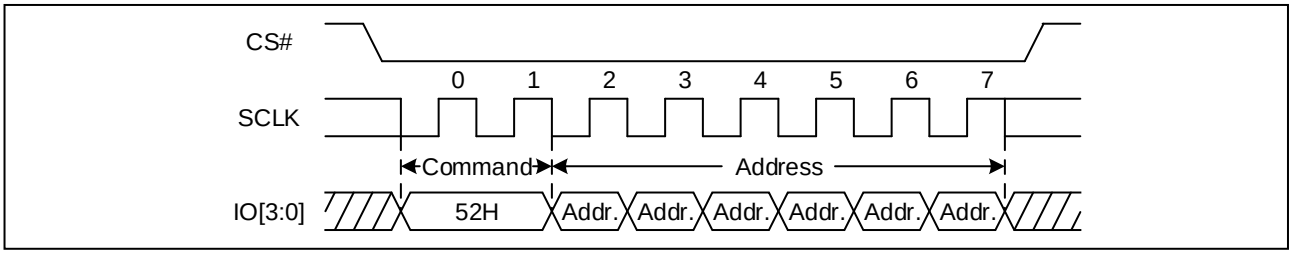

Note: The device default is in 24-bit address mode. For 4-Byte mode, the address length becomes 32-bit.

8.22 64KB Block Erase (BE64) (D8H/DCH)

The 64KB Block Erase command is erased the all data of the chosen block. A Write Enable (WREN) command must previously have been executed to set the Write Enable Latch (WEL) bit. The 64KB Block Erase command is entered by driving CS# low, followed by the command code, and 3-Byte address or 4-Byte address on SI. Any address inside the block is a valid address for the 64KB Block Erase command. CS# must be driven low for the entire duration of the sequence.

The 64KB Block Erase command sequence: CS# goes low → sending 64KB Block Erase command → 3-Byte address or 4-Byte address on SI → CS# goes high. CS# must be driven high after the eighth bit of the last address Byte has been latched in; otherwise the 64KB Block Erase command is not executed. As soon as CS# is driven high, the self-timed Block Erase cycle (whose duration is t_{BE2}) is initiated. While the Block Erase cycle is in progress, the Status Register may be read to check the value of the Write in Progress (WIP) bit. The Write in Progress (WIP) bit is 1 during the self-timed Block Erase cycle, and is 0 when it is completed. At some unspecified time before the cycle is completed, the Write Enable Latch (WEL) bit is reset. A 64KB Block Erase command applied to a block which is protected by the Block Protect (BP4, BP3, BP2, BP1, and BP0) bits is not executed.

Figure 52 64KB Block Erase Sequence Diagram (SPI)

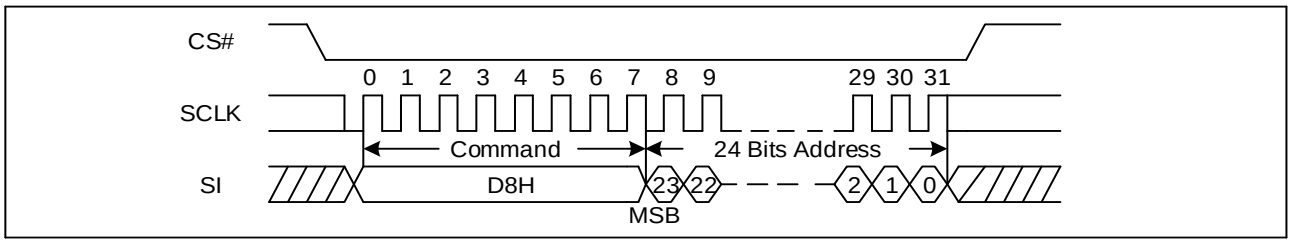

Note: The device default is in 24-bit address mode. For 4-Byte mode, the address length becomes 32-bit.

Figure 53 64KB Block Erase Sequence Diagram (QPI)

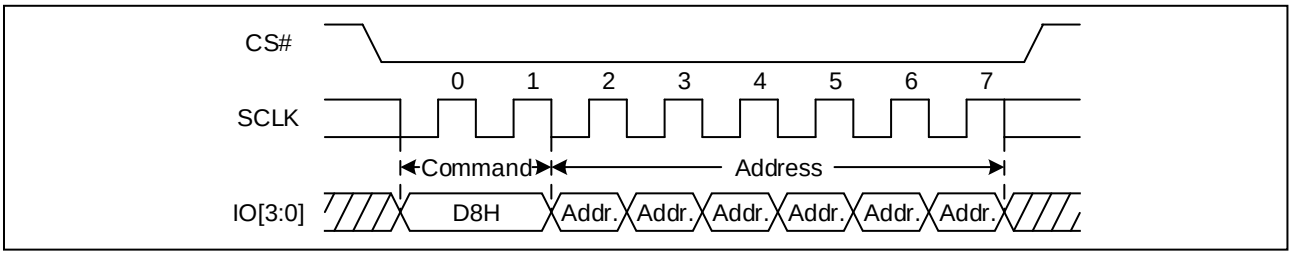

Note: The device default is in 24-bit address mode. For 4-Byte mode, the address length becomes 32-bit.

8.23 Chip Erase (CE) (60H/C7H)

The Chip Erase (CE) command is erased the all data of the chip. A Write Enable (WREN) command must previously have been executed to set the Write Enable Latch (WEL) bit .The Chip Erase (CE) command is entered by driving CS# Low, followed by the command code on Serial Data Input (SI). CS# must be driven Low for the entire duration of the sequence.

The Chip Erase command sequence: CS# goes low → sending Chip Erase command → CS# goes high. CS# must be driven high after the eighth bit of the command code has been latched in; otherwise the Chip Erase command is not executed. As soon as CS# is driven high, the self-timed Chip Erase cycle (whose duration is t_{CE}) is initiated. While the Chip Erase cycle is in progress, the Status Register may be read to check the value of the Write in Progress (WIP) bit. The Write in Progress (WIP) bit is 1 during the self-timed Chip Erase cycle, and is 0 when it is completed. At some unspecified time before the cycle is completed, the Write Enable Latch (WEL) bit is reset. The Chip Erase (CE) command is executed if the Block Protect (BP2, BP1, and BP0) bits are 0 The Chip Erase (CE) command is ignored if one or more sectors are protected.

Figure 54 Chip Erase Sequence Diagram (SPI)

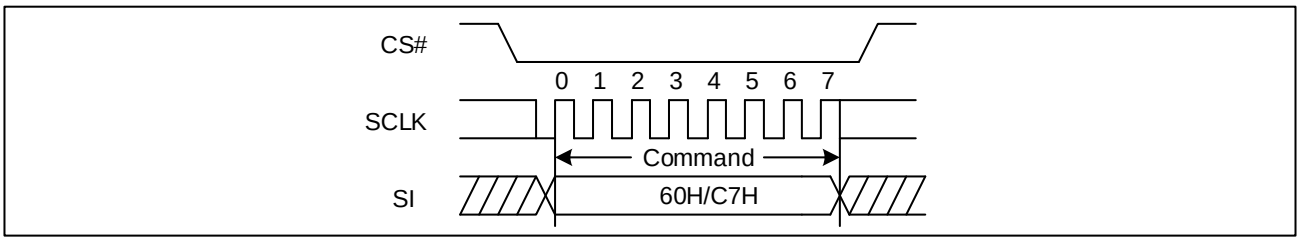

Figure 55 Chip Erase Sequence Diagram (QPI)

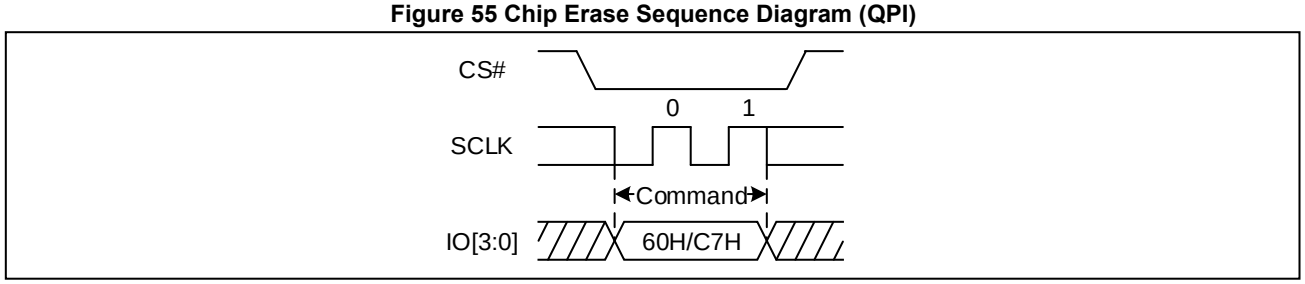

8.24 Enable QPI (38H)

The device support both Standard/Quad SPI and QPI mode. The “Enable QPI (38H)” command can switch the device from SPI mode to QPI mode. In order to switch the device to QPI mode, “Enable QPI (38H)” command must be issued. When the device is switched from SPI mode to QPI mode, the existing Write Enable Latch and Program/Erase Suspend status, and the Wrap Length setting will remain unchanged.

Figure 56 Enable QPI mode command Sequence Diagram

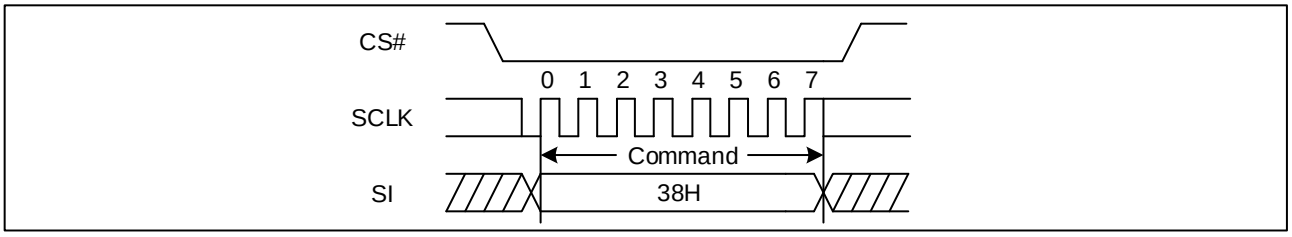

8.25 Disable QPI (FFH)

To exit the QPI mode and return to Standard/Quad SPI mode, the “Disable QPI (FFH)” command must be issued. When the device is switched from QPI mode to SPI mode, the existing Write Enable Latch and Program/Erase Suspend status, and the Wrap Length setting will remain unchanged.

Figure 57 Disable QPI mode command Sequence Diagram

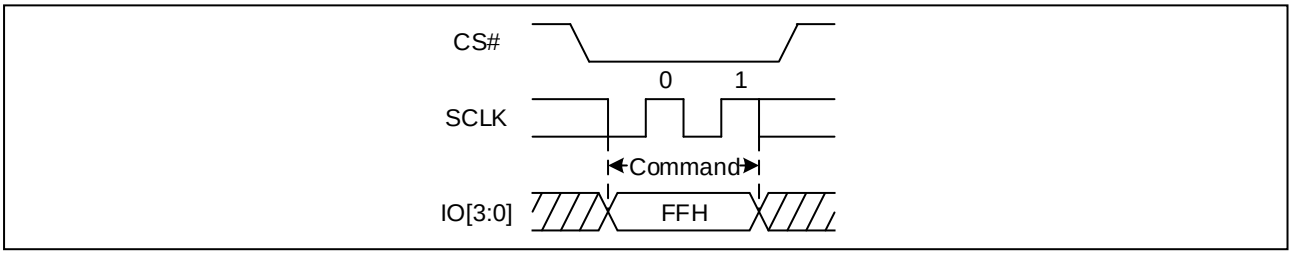

8.26 Deep Power-Down (DP) (B9H)

Executing the Deep Power-Down (DP) command is the only way to put the device in the lowest consumption mode (the Deep Power-Down Mode). It can also be used as an extra software protection mechanism, while the device is not in active use, since in this mode, the device ignores all Write, Program and Erase commands. Driving CS# high deselects the device, and puts the device in the Standby Mode (if there is no internal cycle currently in progress). But this mode is not the Deep Power-Down Mode. The Deep Power-Down Mode can only be entered by executing the Deep Power-Down (DP) command. Once the device has entered the Deep Power-Down Mode, all commands are ignored except the Release from Deep Power-Down (ABH) or Enable Reset (66H) and Reset (99H) commands. These commands can release the device from this mode. The Release from Deep Power-Down command releases the device from deep power down mode.

The Deep Power-Down Mode automatically stops at Power-Down, and the device is in the Standby Mode after Power-Up. The Deep Power-Down command sequence: CS# goes low → sending Deep Power-Down command → CS# goes high. CS# must be driven high after the eighth bit of the command code has been latched in; otherwise the Deep Power-Down (DP) command is not executed. As soon as CS# is driven high, it requires a delay of t_{DP} before the supply current is reduced to I_{CC2} and the Deep Power-Down Mode is entered. Any Deep Power-Down (DP) command, while an Erase, Program or Write cycle is in progress, is rejected without having any effects on the cycle that is in progress.

Figure 58 Deep Power-Down Sequence Diagram (SPI)

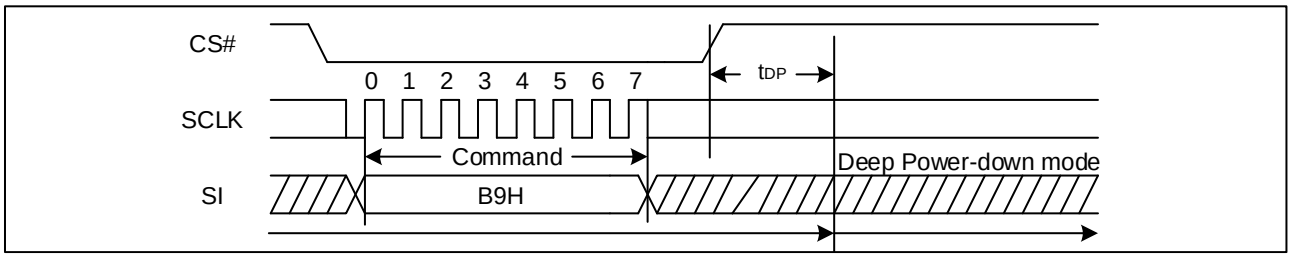

Figure 59 Deep Power-Down Sequence Diagram (QPI)

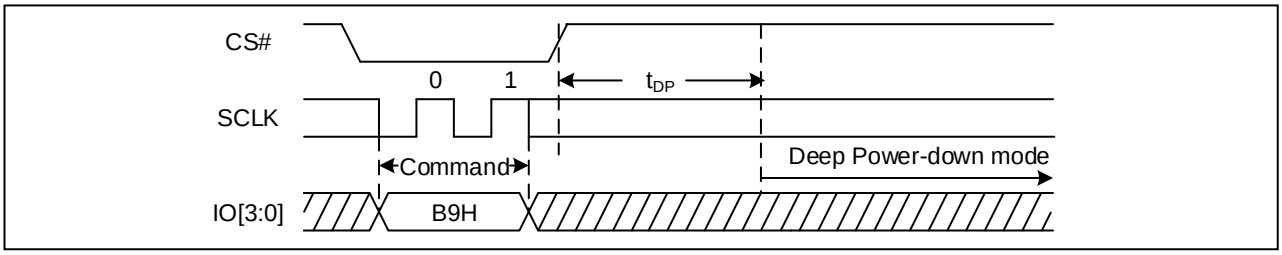

8.27 Release from Deep Power-Down (ABH)

To release the device from the Power-Down state, the command is issued by driving the CS# pin low, shifting the instruction code "ABH" and driving CS# high. Release from Power-Down will take the time duration of t_{RES1} (See AC Characteristics) before the device will resume normal operation and other command are accepted. The CS# pin must

remain high during the t_{RES1} time duration.

When used to release the device from the Power-Down state, the command is the same as previously described, After this time duration the device will resume normal operation and other command will be accepted. If the Release from Power-Down command is issued while an Erase, Program or Write cycle is in process (when WIP equal 1) the command is ignored and will not have any effects on the current cycle.

Figure 60 Release Power-Down Sequence Diagram (SPI)

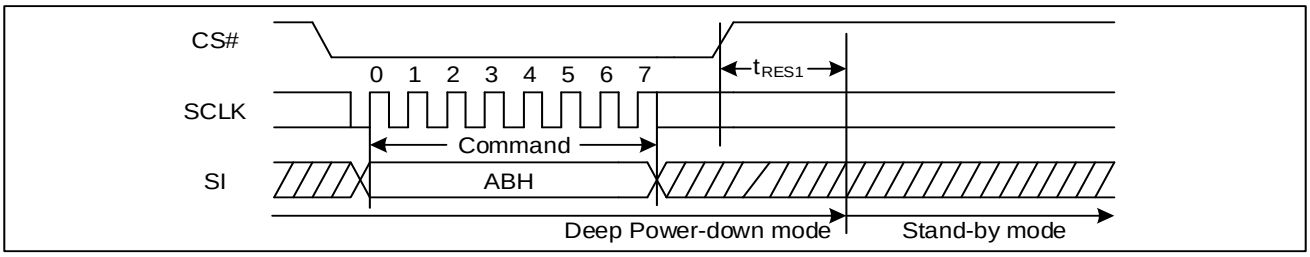

Figure 61 Release Power-Down Sequence Diagram (QPI)

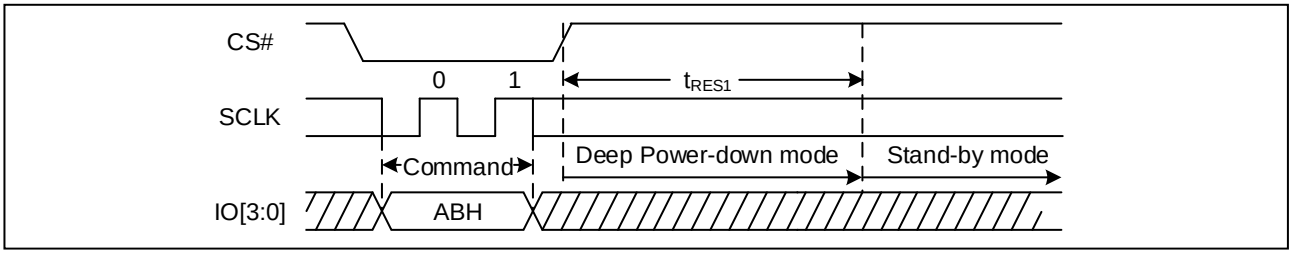

8.28 Read Unique ID (4BH)

The Read Unique ID command accesses a factory-set read-only 128bit number that is unique to each device. The Unique ID can be used in conjunction with user software methods to help prevent copying or cloning of a system.

The Read Unique ID command sequence: CS# goes low → sending Read Unique ID command → 3-Byte (000000H) or 4-Byte (00000000H) Address →1 Byte Dummy →128bit Unique ID Out →CS# goes high.

Figure 62 Read Unique ID Sequence Diagram (SPI)

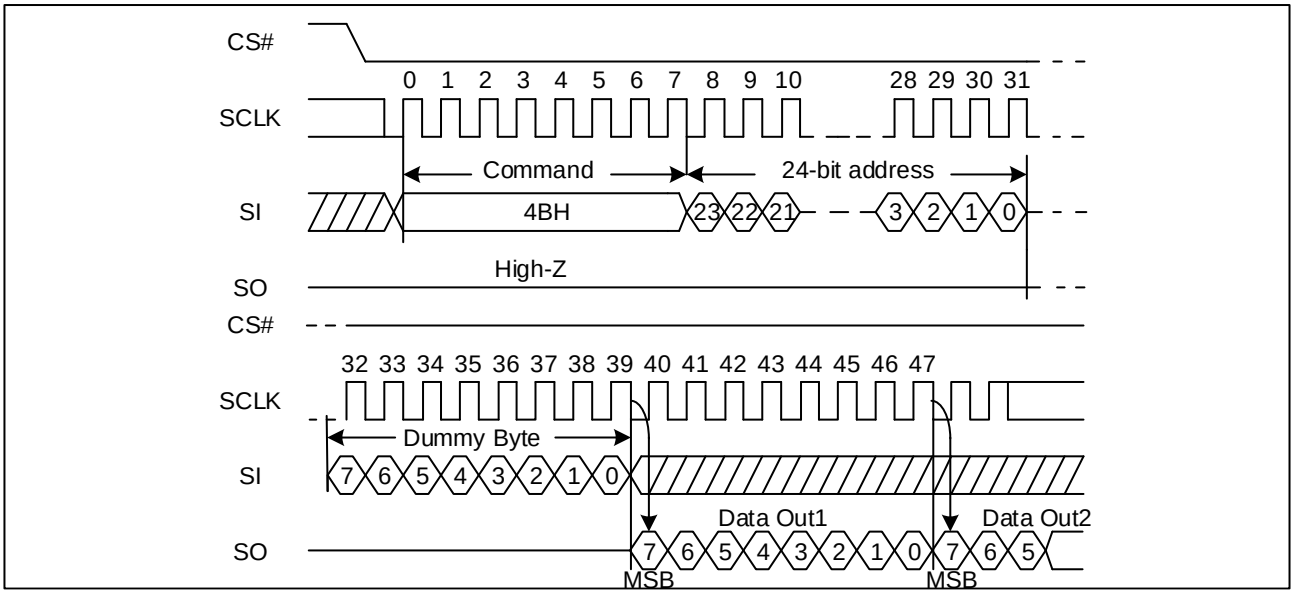

Note: The device default is in 24-bit address mode. For 4-Byte mode, the address length becomes 32-bit.

Figure 63 Read Unique ID Sequence Diagram (QPI)

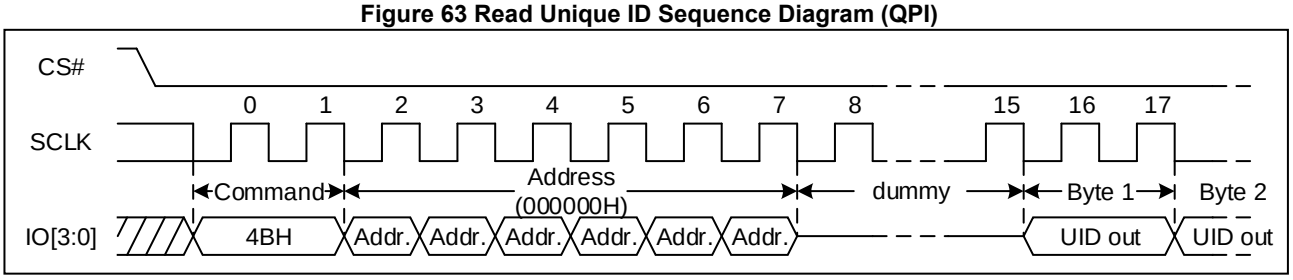

Note: The device default is in 24-bit address mode. For 4-Byte mode, the address length becomes 32-bit.

8.29 Read Identification (RDID) (9FH/9EH)

The Read Identification (RDID) command allows the 8-bit manufacturer identification to be read, followed by three Bytes of device identification. The device identification indicates the memory type in the first Byte, and the memory capacity of the device in the second Byte. The Read Identification (RDID) command while an Erase or Program cycle is in progress, is not decoded, and has no effect on the cycle that is in progress. The Read Identification (RDID) command should not be issued while the device is in Deep Power-Down Mode.

The device is first selected by driving CS# low. Then, the 8-bit command code for the command is shifted in. This is followed by the 32-bit device identification, stored in the memory. Each bit is shifted out on the falling edge of Serial Clock. The Read Identification (RDID) command is terminated by driving CS# high at any time during data output. When CS# is driven high, the device is in the Standby Mode. Once in the Standby Mode, the device waits to be selected, so that it can receive, decode and execute commands.

Figure 64 Read Identification ID Sequence Diagram (SPI)

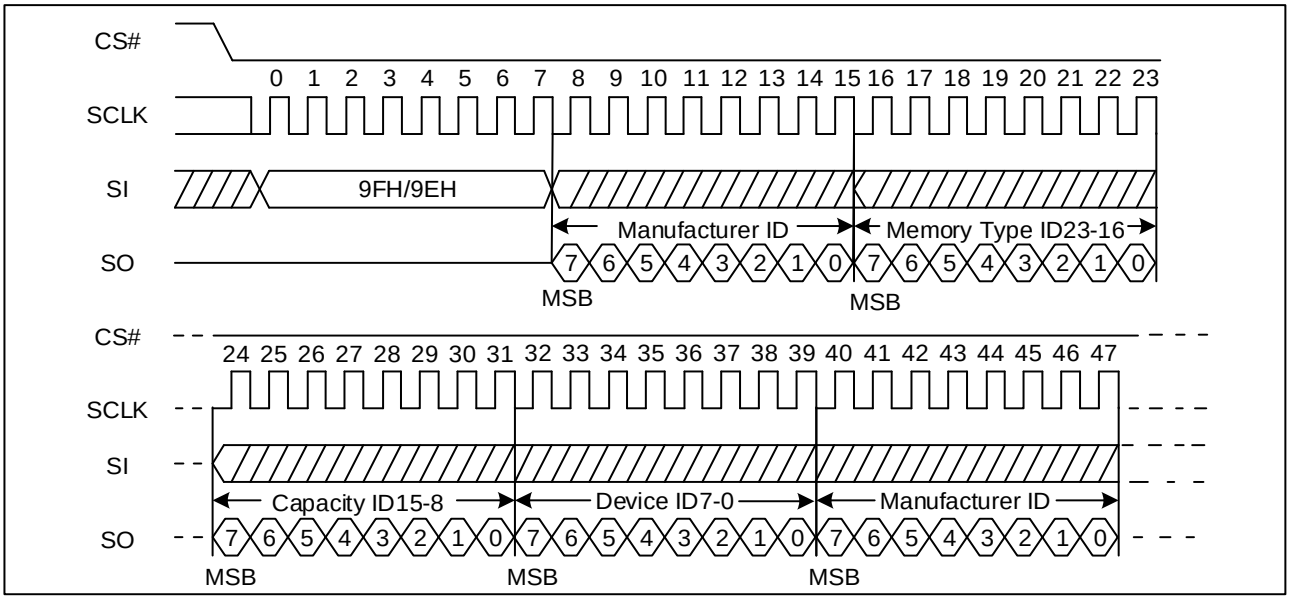

Figure 65 Read Identification ID Sequence Diagram (QPI)

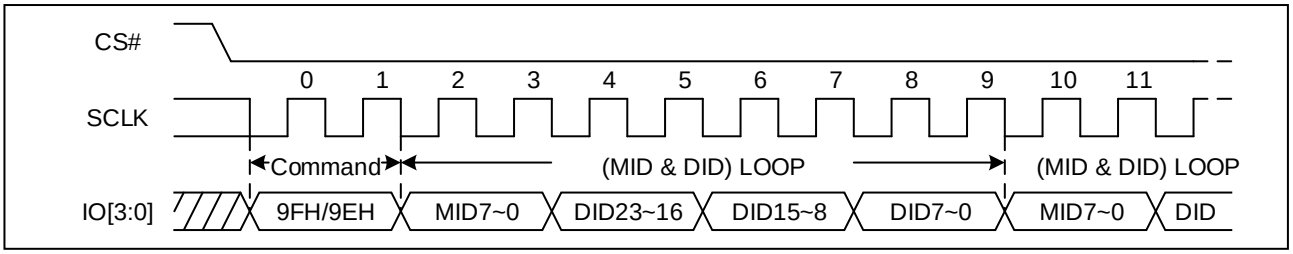

8.30 Program/Erase Suspend (PES) (75H)

The Program/Erase Suspend command “75H”, allows the system to interrupt a page program or sector/block erase operation and then read data from any other sector or block. The Write Register command (01H, B1H) and Erase/Program Security Registers command (44H, 42H) and Erase commands (20H/21H, 52H/5CH, D8H/DCH, C7H, 60H) and Page Program command (02H/12H, 32H/34H, C2H/3EH) are not allowed during Program suspend. The Write Register command (01H, B1H) and Erase Security Registers command (44H) and Erase commands (20H/21H, 52H/5CH, D8H/DCH, C7H, 60H) are not allowed during Erase suspend. Program/Erase Suspend is valid only during the page program or sector/block erase operation. A maximum of time of “tsus” (See AC Characteristics) is required to suspend the program/erase operation. The Program/Erase Suspend command will be accepted by the device only if the SUS2/SUS1 bit in the Status Register equal to 0 and WIP bit equal to 1 while a Page Program or a Sector or Block Erase operation is on-going. If the SUS2/SUS1 bit equal to 1 or WIP bit equal to 0, the Suspend command will be ignored by the device. The WIP bit will be cleared from 1 to 0 within “tsus” and the SUS2/SUS1 bit will be set from 0 to 1 immediately after Program/Erase Suspend. A power-off during the suspend period will reset the device and release the suspend state.

Figure 66 Program/Erase Suspend Sequence Diagram (SPI)

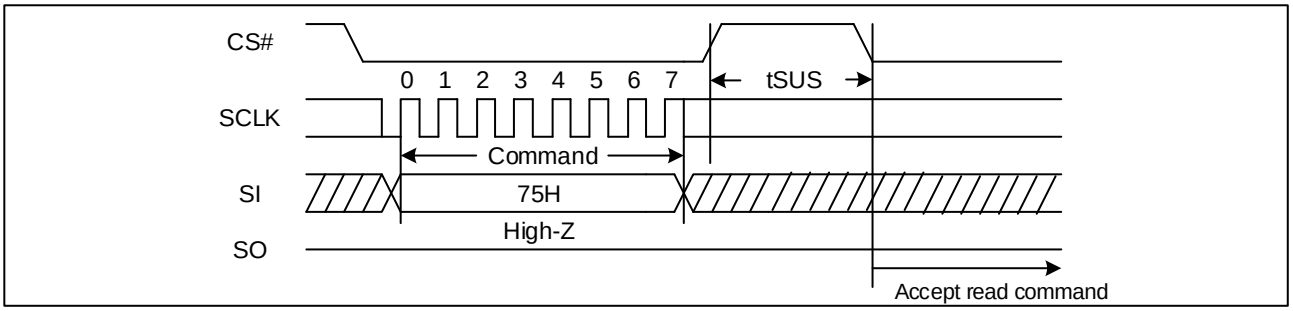

Figure 67 Program/Erase Suspend Sequence Diagram (QPI)

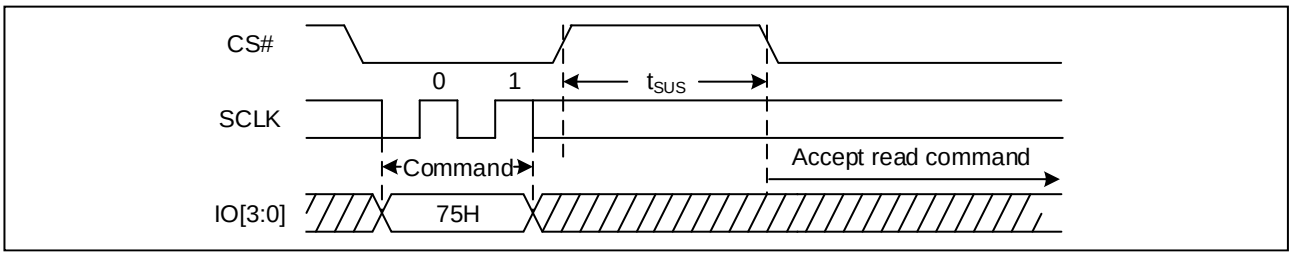

8.31 Program/Erase Resume (PER) (7AH)

The Program/Erase Resume command must be written to resume the program or sector/block erase operation after a Program/Erase Suspend command. The Program/Erase Resume command will be accepted by the device only if the SUS2/SUS1 bit equal to 1 and the WIP bit equal to 0. After issued the SUS2/SUS1 bit in the status register will be cleared from 1 to 0 immediately, the WIP bit will be set from 0 to 1 within 200ns and the Sector or Block will complete the erase operation or the page will complete the program operation. The Program/Erase Resume command will be ignored unless a Program/Erase Suspend is active.

Figure 68 Program/Erase Resume Sequence Diagram

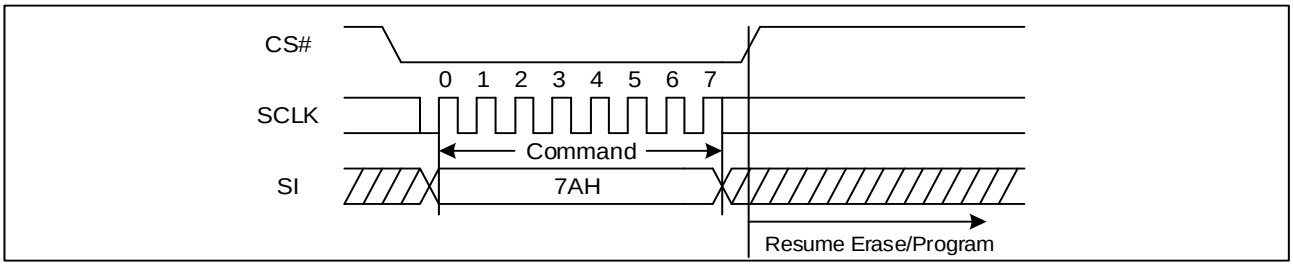

Figure 69 Program/Erase Resume Sequence Diagram (QPI)

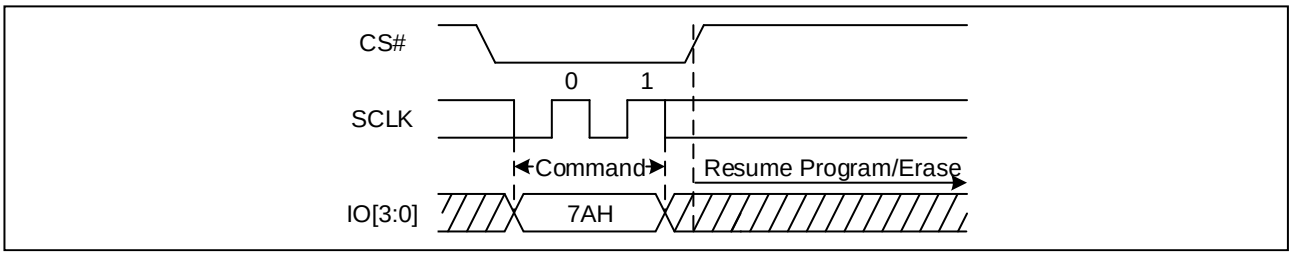

8.32 Erase Security Registers (44H)

The GD25B512ME provides 4K-Byte Security Registers which can be erased and programmed individually. These registers may be used by the system manufacturers to store security and other important information separately from the main memory array.

The Erase Security Registers command is similar to Sector/Block Erase command. A Write Enable (WREN) command must previously have been executed to set the Write Enable Latch (WEL) bit.

The Erase Security Registers command sequence: CS# goes low → sending Erase Security Registers command → CS# goes high. CS# must be driven high after the eighth bit of the last address Byte has been latched in; otherwise the Erase Security Registers command is not executed. As soon as CS# is driven high, the self-timed Erase Security Registers cycle (whose duration is t_{SE}) is initiated. While the Erase Security Registers cycle is in progress, the Status Register may be read to check the value of the Write in Progress (WIP) bit. The Write in Progress (WIP) bit is 1 during the self-timed Erase Security Registers cycle, and is 0 when it is completed. At some unspecified time before the cycle is completed, the Write Enable Latch (WEL) bit is reset. The Security Registers Lock Bit in the Status Register can be used to OTP protect the security registers. Once the bit is set to 1, the Security Registers will be permanently locked; the Erase Security Registers command will be ignored.

Address	A23-16	A15-12	A11-0
Security Register	00H	0 0 0 0	Don't care

Figure 70 Erase Security Registers command Sequence Diagram (SPI)

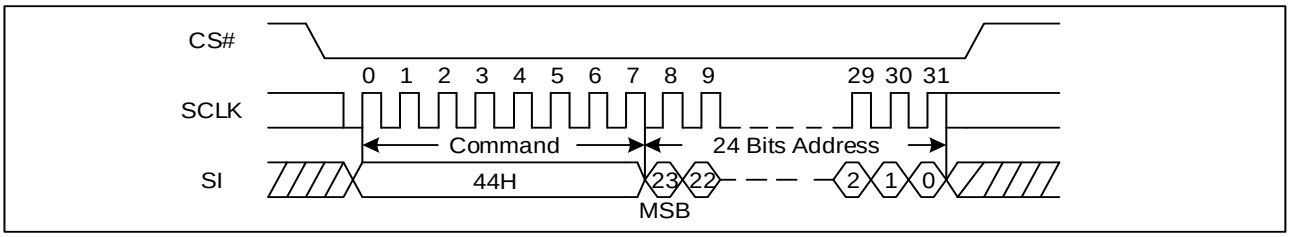

Note: The device default is in 24-bit address mode. For 4-Byte mode, the address length becomes 32-bit.

Figure 71 Erase Security Registers command Sequence Diagram (QPI)

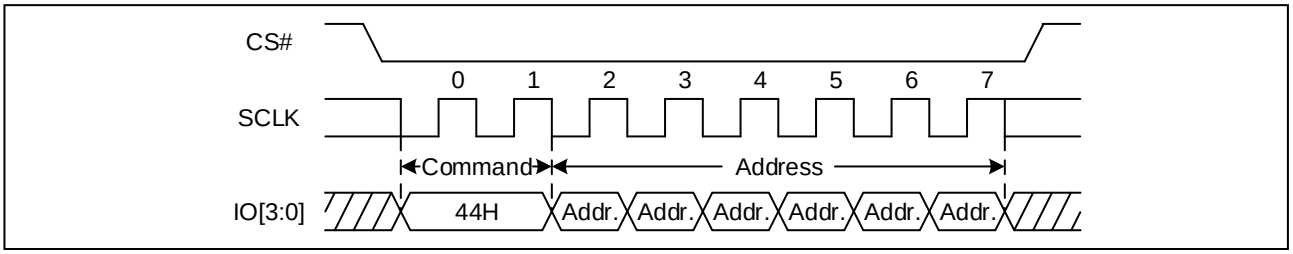

Note: The device default is in 24-bit address mode. For 4-Byte mode, the address length becomes 32-bit.

8.33 Program Security Registers (42H)

The Program Security Registers command is similar to the Page Program command. The security register contains 16 pages content. A Write Enable (WREN) command must previously have been executed to set the Write Enable Latch (WEL) bit before sending the Program Security Registers command. The Program Security Registers command is entered by driving CS# Low, followed by the command code (42H), three address Bytes and at least one data Byte on SI. As soon as CS# is driven high, the self-timed Program Security Registers cycle (whose duration is tPP) is initiated. While the Program Security Registers cycle is in progress, the Status Register may be read to check the value of the Write in Progress (WIP) bit. The Write in Progress (WIP) bit is 1 during the self-timed Program Security Registers cycle, and is 0 when it is completed. At some unspecified time before the cycle is completed, the Write Enable Latch (WEL) bit is reset.

If the Security Registers Lock Bit is set to 1, the Security Registers will be permanently locked. Program Security Registers command will be ignored.

Address	A23-16	A15-12	A11-8	A7-0
Security Register	00H	0 0 0 0	Page Address	Byte Address

Figure 72 Program Security Registers command Sequence Diagram (SPI)

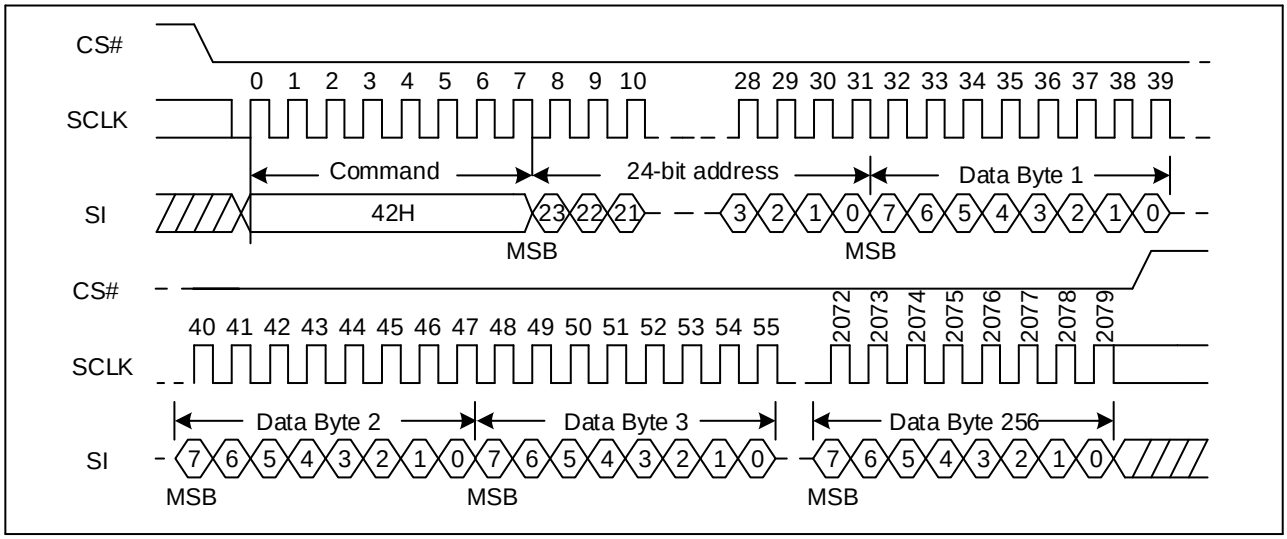

Note: The device default is in 24-bit address mode. For 4-Byte mode, the address length becomes 32-bit.

Figure 73 Program Security Registers command Sequence Diagram (QPI)

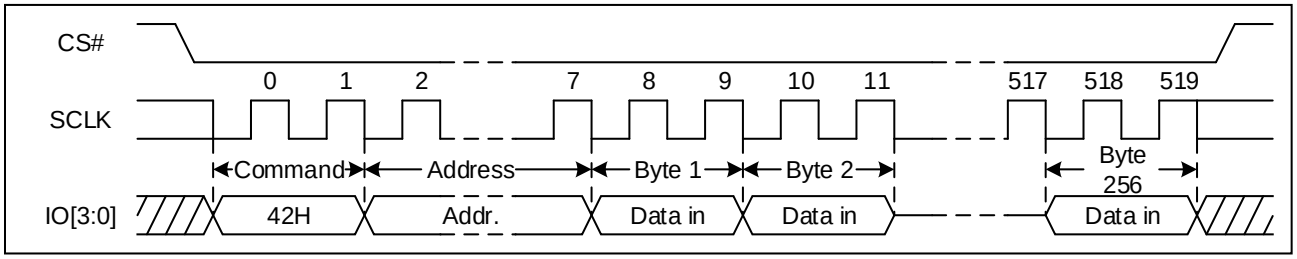

Note: The device default is in 24-bit address mode. For 4-Byte mode, the address length becomes 32-bit.

8.34 Read Security Registers (48H)

The Read Security Registers command is similar to Fast Read command. The command is followed by a 3-Byte or 4-Byte address (A23-A0 or A31-A0) and a dummy Byte, and each bit is latched-in on the rising edge of SCLK. Then the memory content, at that address, is shifted out on SO, and each bit is shifted out, at a Max frequency f_C, on the falling edge of SCLK. The first Byte addressed can be at any location. The address is automatically incremented to the next higher address after each Byte of data is shifted out. Once the A11-A0 address reaches the last Byte of the register (Byte FFFH), it will reset to 000H, the command is completed by driving CS# high.

Address	A23-16	A15-12	A11-8	A7-0
Security Register	00H	0 0 0 0	Page Address	Byte Address

Figure 74 Read Security Registers command Sequence Diagram (SPI)

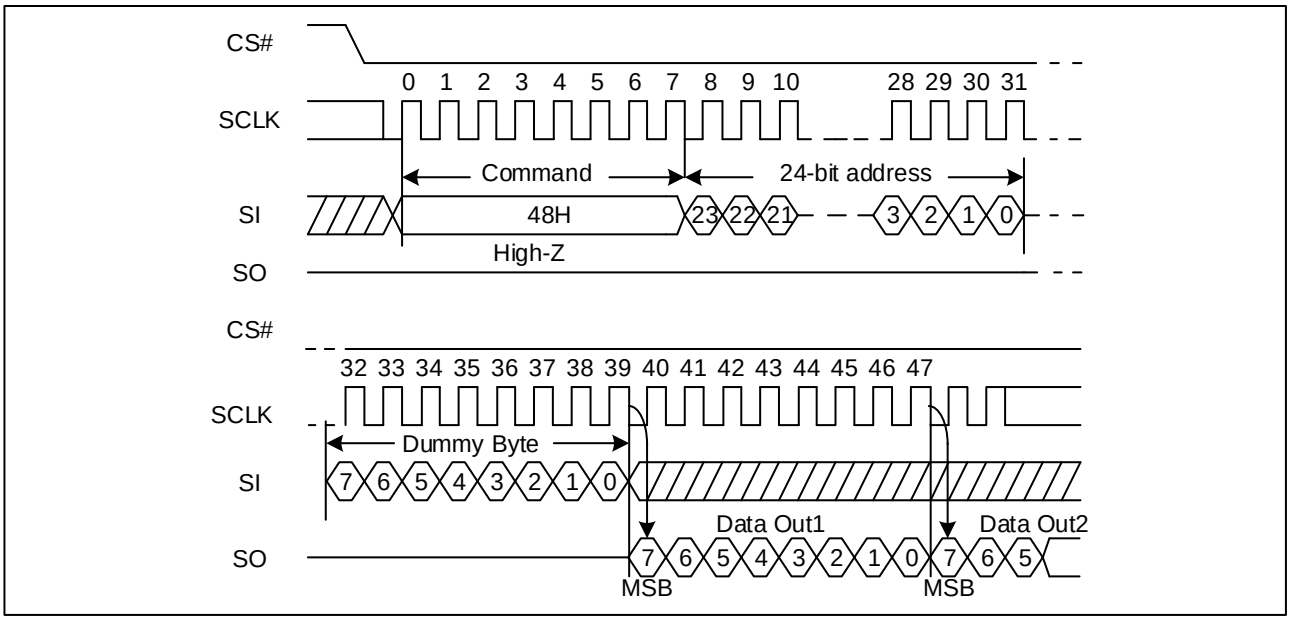

Note: The device default is in 24-bit address mode. For 4-Byte mode, the address length becomes 32-bit.

Figure 75 Read Security Registers command Sequence Diagram (QPI)

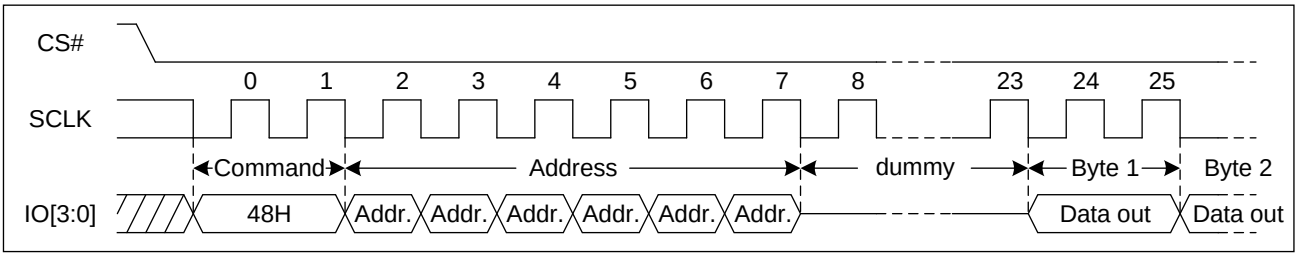

Note: The device default is in 24-bit address mode. For 4-Byte mode, the address length becomes 32-bit.

8.35 Individual Block/Sector Lock (36H)/Unlock (39H)/Read (3DH)

The individual block/sector lock provides an alternative way to protect the memory array from adverse Erase/Program. In order to use the Individual Block/Sector Locks, the WPS bit in Configuration Register bit 2 at address 04h must be set to 0. If WPS=1, the write protection will be determined by the combination of BP (4:0) bits in the Status Register.

The individual Block/Sector Lock command (36H) sequence: CS# goes low →SI: Sending individual Block/Sector Lock command→ SI: Sending 3-Byte or 4-Byte individual Block/Sector Lock Address → CS# goes high.

The individual Block/Sector Unlock command (39H) sequence: CS# goes low →SI: Sending individual Block/Sector Unlock command→ SI: Sending 3-Byte or 4-Byte individual Block/Sector Lock Address → CS# goes high.

The Read individual Block/Sector lock command (3DH) sequence: CS# goes low → SI: Sending Read individual Block/Sector Lock command→ SI: Sending 3-Byte or 4-Byte individual Block/Sector Lock Address → SO: The Block/Sector Lock Bit will out →CS# goes high. If the least significant bit (LSB) is1, the corresponding block/sector is locked, if the LSB is 0, the corresponding block/sector is unlocked, Erase/Program operation can be performed.

Figure 76 Individual Block/Sector Lock command Sequence Diagram (SPI)

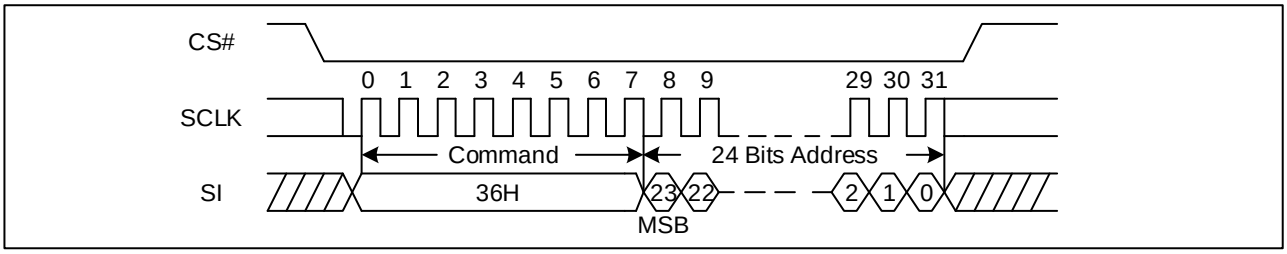

Note: The device default is in 24-bit address mode. For 4-Byte mode, the address length becomes 32-bit.

Figure 77 Individual Block/Sector Lock command Sequence Diagram (QPI)

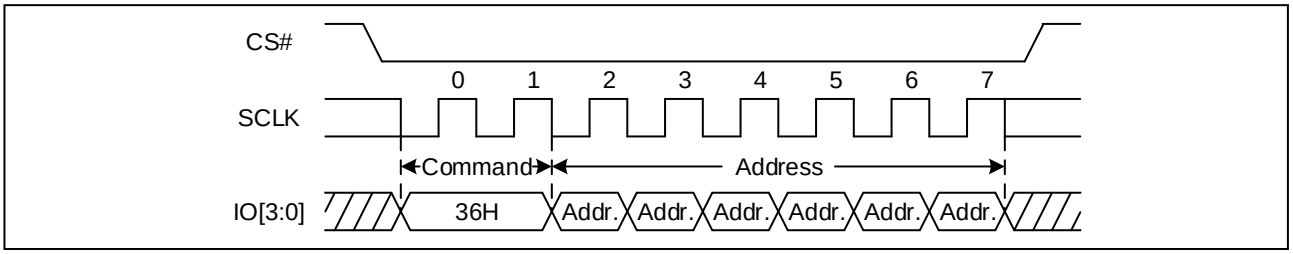

Note: The device default is in 24-bit address mode. For 4-Byte mode, the address length becomes 32-bit.

Figure 78 Individual Block/Sector Unlock command Sequence Diagram (SPI)

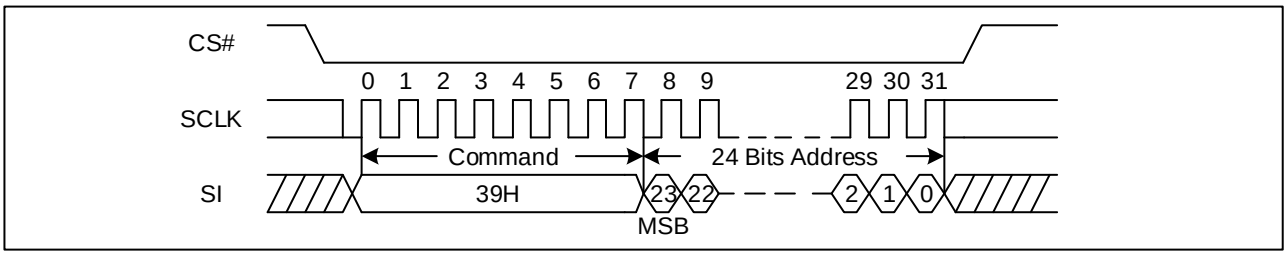

Note: The device default is in 24-bit address mode. For 4-Byte mode, the address length becomes 32-bit.

Figure 79 Individual Block/Sector Unlock command Sequence Diagram (QPI)

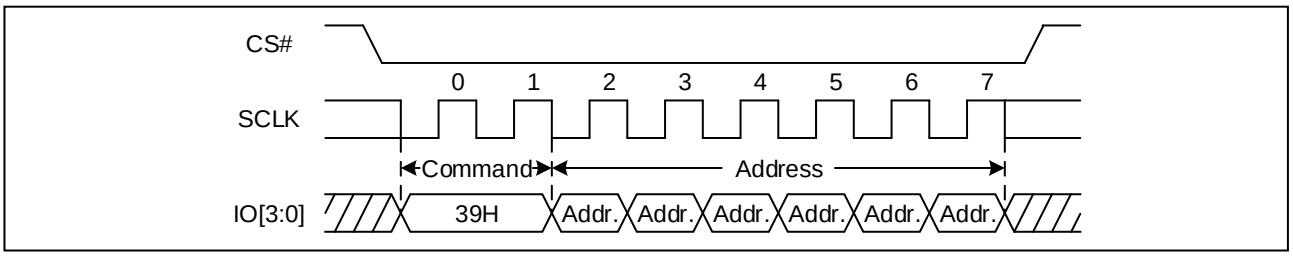

Note: The device default is in 24-bit address mode. For 4-Byte mode, the address length becomes 32-bit.

Figure 80 Read Individual Block/Sector lock command Sequence Diagram (SPI)

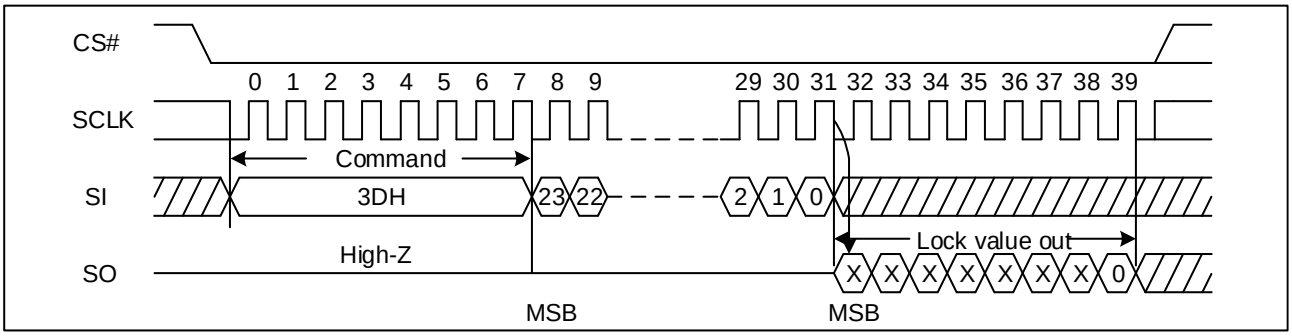

Note: The device default is in 24-bit address mode. For 4-Byte mode, the address length becomes 32-bit.

Figure 81 Read Individual Block/Sector lock command Sequence Diagram (QPI)

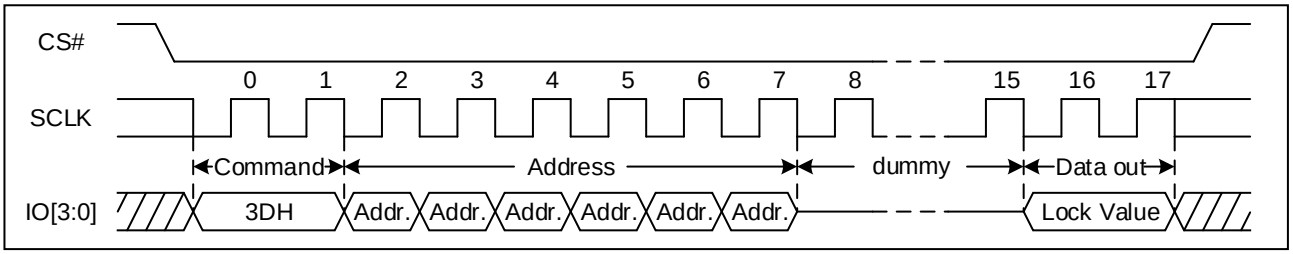

Note: The device default is in 24-bit address mode. For 4-Byte mode, the address length becomes 32-bit.

8.36 Global Block/Sector Lock (7EH) or Unlock (98H)

All Block/Sector Lock bits can be set to 1 by the Global Block/Sector Lock command, or can set to 0 by the Global Block/Sector Unlock command.

The Global Block/Sector Lock command (7EH) sequence: CS# goes low →SI: Sending Global Block/Sector Lock command→ CS# goes high.

The Global Block/Sector Unlock command (98H) sequence: CS# goes low →SI: Sending Global Block/Sector Unlock command→ CS# goes high.

Figure 82 Global Block/Sector Lock Sequence Diagram (SPI)

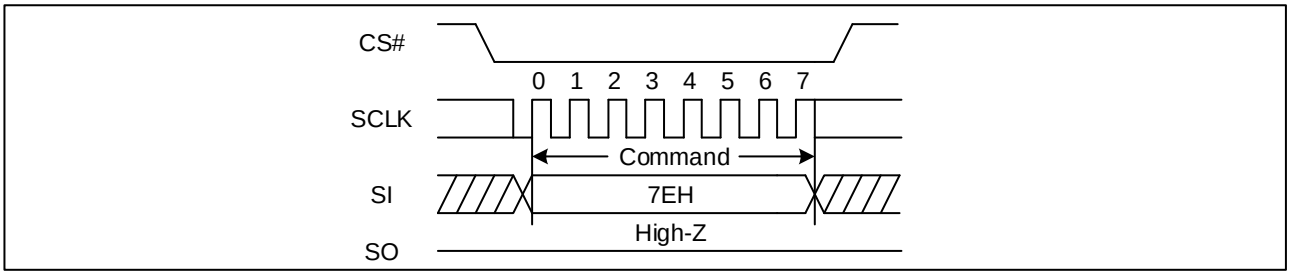

Figure 83 Global Block/Sector Lock Sequence Diagram (QPI)

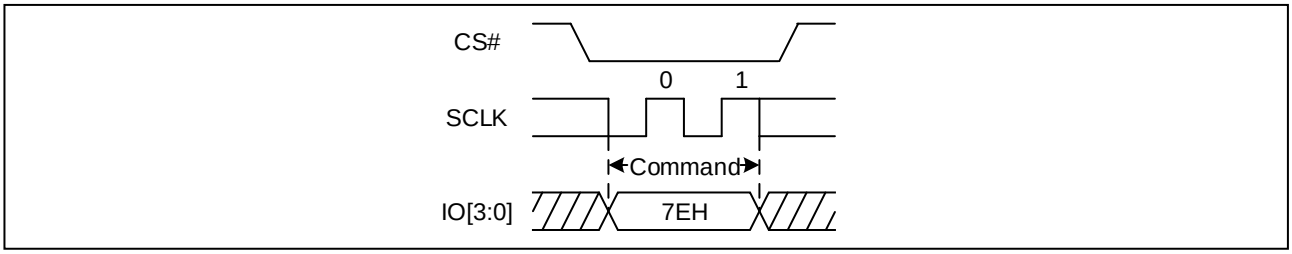

Figure 84 Global Block/Sector Unlock Sequence Diagram (SPI)

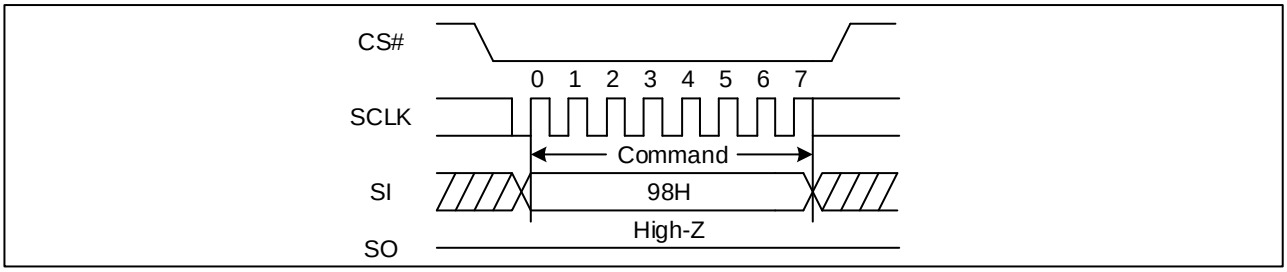

Figure 85 Global Block/Sector Unlock Sequence Diagram (QPI)

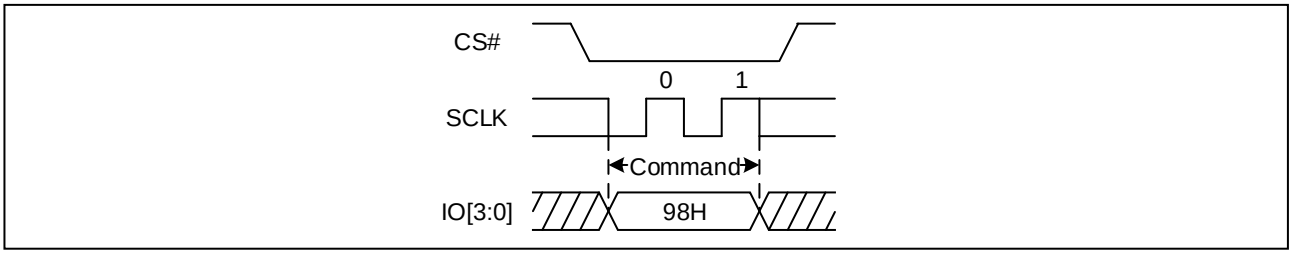

8.37 Enable Reset (66H) and Reset (99H)

If the Reset command is accepted, any on-going internal operation (except in Continuous Read Mode) will be terminated and the device will return to its default power-on state and lose all the current volatile settings, such as Volatile Status Register bits, Write Enable Latch status (WEL), Program/Erase Suspend status, Read Parameter setting (P7-P0), Deep Power Down Mode, Continuous Read Mode bit setting (M7-M0).

When Flash is in QPI Mode or Continuous Read Mode (XIP), 66H&99H cannot reset Flash to power-on state. Therefore, it is recommended to send the following sequence to reset Flash in these modes:

1. 8CLK with IO<3:0>= all “H” or all “L”: ensure Flash quit XIP mode
2. QPI format 66H/99H: ensure Flash in QPI mode can be reset
3. SPI format 66H/99H: ensure Flash in SPI mode can be reset

The “Enable Reset (66H)” and the “Reset (99H)” commands can be issued in either SPI or QPI mode. The “Reset (99H)” command sequence as follow: CS# goes low → Sending Enable Reset command → CS# goes high → CS# goes low → Sending Reset command → CS# goes high. Once the Reset command is accepted by the device, the device will take approximately tRST / tRST_E to reset. During this period, no command will be accepted. Data corruption may happen if there is an on-going or suspended internal Erase or Program operation when Reset command sequence is accepted by the device. It is recommended to check the WIP bit and the SUS2/SUS1 bits in Status Register before issuing the Reset command sequence.

Figure 86 Enable Reset and Reset command Sequence Diagram (SPI)

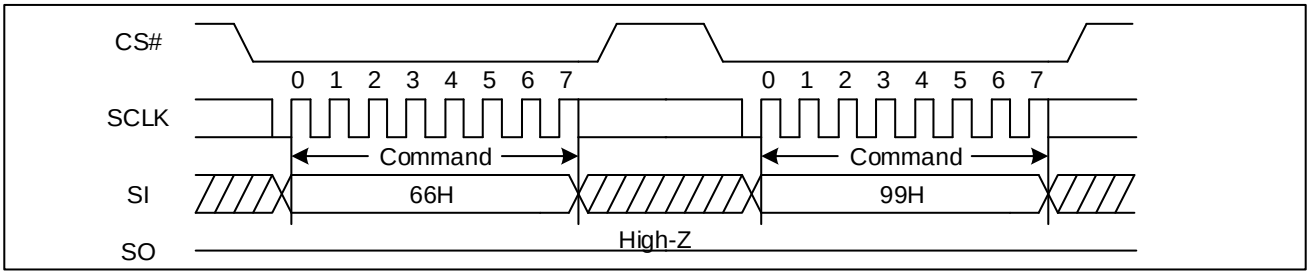

Figure 87 Enable Reset and Reset command Sequence Diagram (QPI)

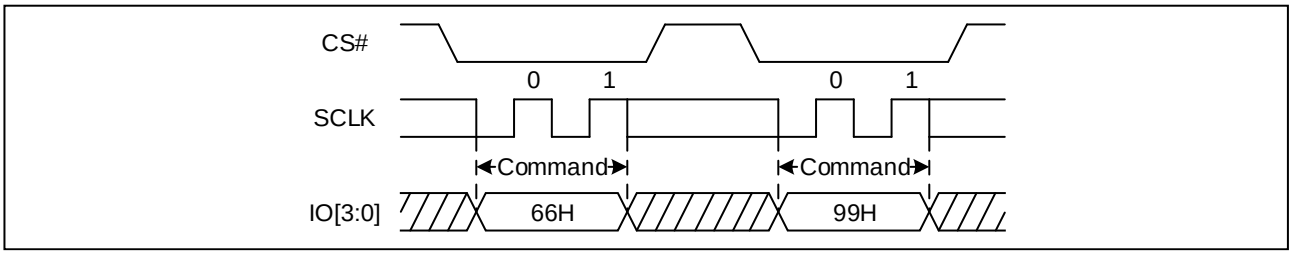

8.38 Read Serial Flash Discoverable Parameter (5AH)

The Serial Flash Discoverable Parameter (SFDP) standard provides a consistent method of describing the functional and feature capabilities of serial flash devices in a standard set of internal parameter tables. These parameter tables can be interrogated by host system software to enable adjustments needed to accommodate divergent features from multiple vendors. The concept is similar to the one found in the Introduction of JEDEC Standard, JESD68 on CFI. SFDP is a standard of JEDEC Standard No.216B.

Figure 88 Read Serial Flash Discoverable Parameter command Sequence Diagram (SPI)

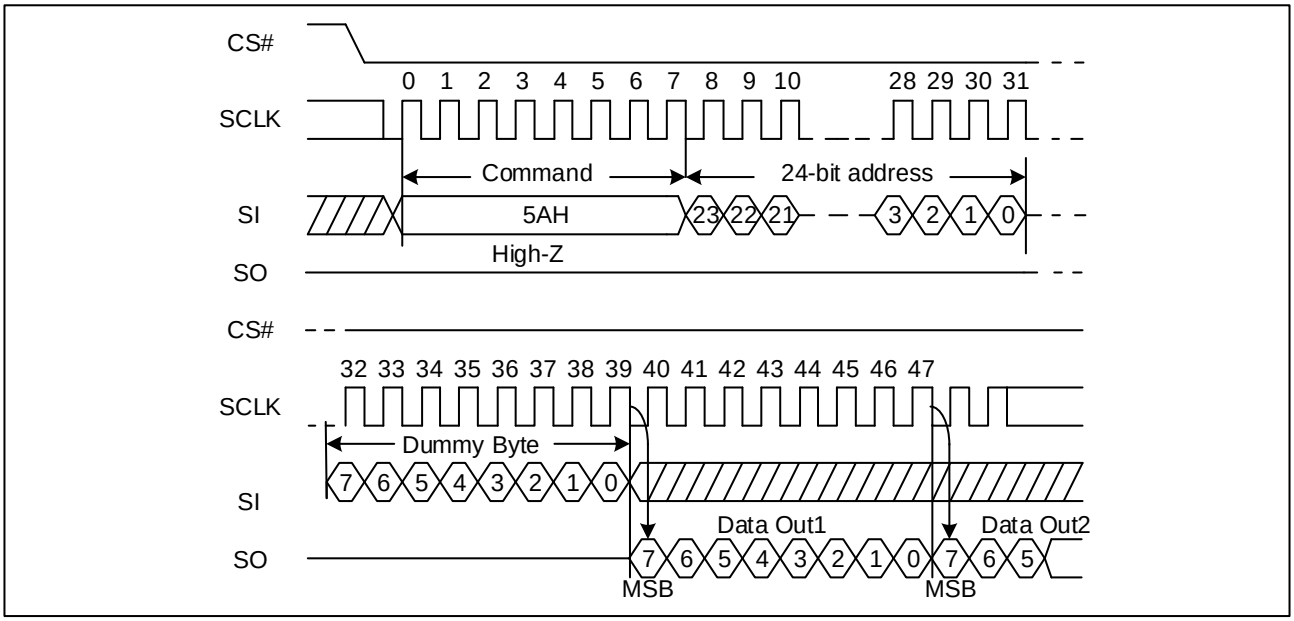

Figure 89 Read Serial Flash Discoverable Parameter command Sequence Diagram (QPI)

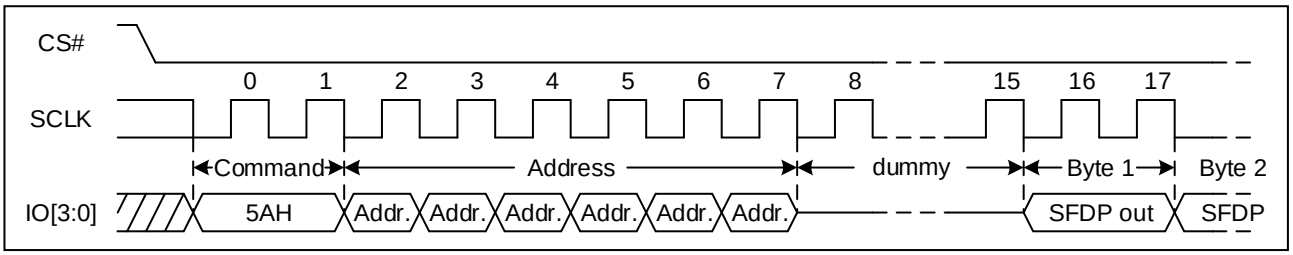

Table 15 Signature and Parameter Identification Data Values (Please contact GigaDevice for details)

9 ELECTRICAL CHARACTERISTICS

9.1 Power-On Timing

Figure 90 Power-on Timing

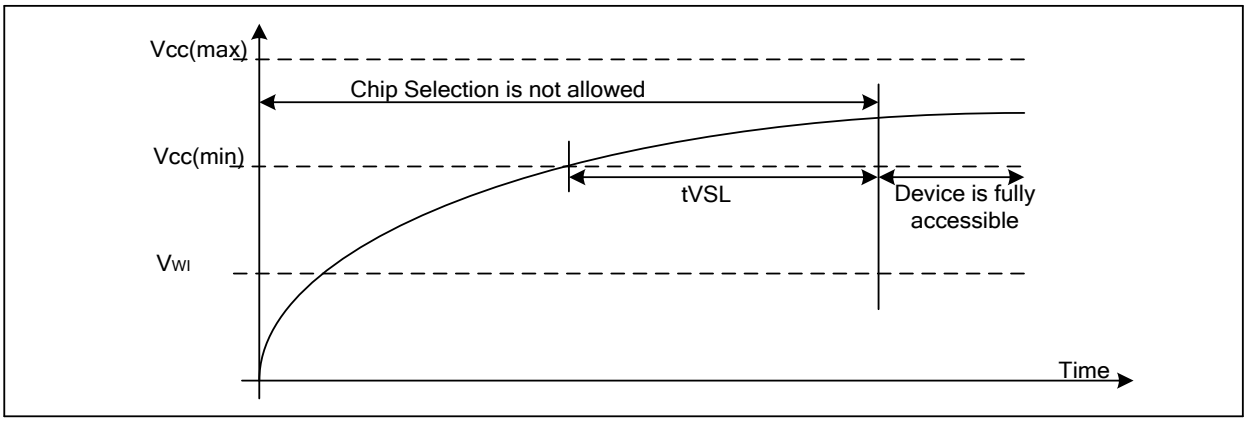

Table 16 Power-Up Timing and Write Inhibit Threshold

Symbol	Parameter	Min.	Max.	Unit
tVSL	VCC (min.) to device operation	1.8		ms
VWI	Write Inhibit Voltage	1.5	2.5	V

9.2 Initial Delivery State

The device is delivered with the memory array erased: all bits are set to 1 (each Byte contains FFH). The Status Register contains 00H (all Status Register bits are 0).

9.3 Absolute Maximum Ratings

Parameter	Value	Unit
Ambient Operating Temperature (T_A)	-40 to 85 -40 to 105 -40 to 125	℃
Storage Temperature	-65 to 150	℃
Transient Input/Output Voltage (note: overshoot)	-2.0 to VCC+2.0	V
Applied Input/Output Voltage	-0.6 to VCC+0.4	V
VCC	-0.6 to 4.2	V

Figure 91. Input Test Waveform and Measurement Level

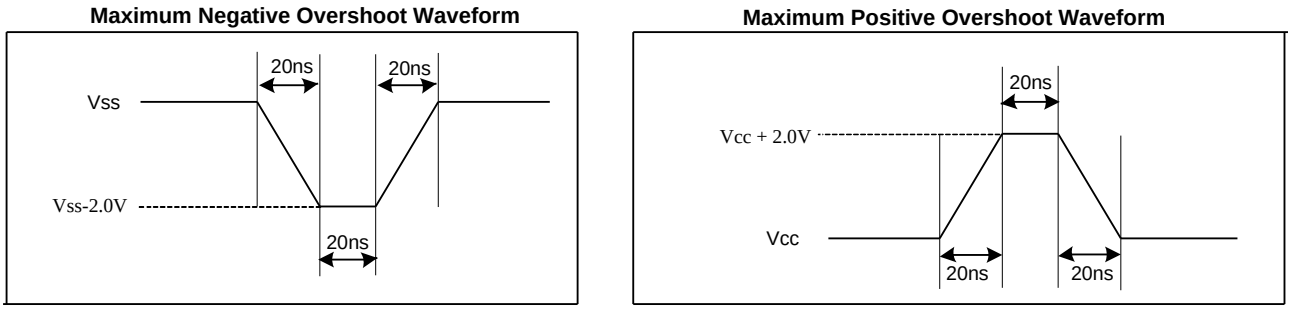

9.4 Capacitance Measurement Conditions

Symbol	Parameter	Min	Typ.	Max	Unit	Conditions
CIN/COUT	Input/Output Capacitance (IO pins: IO[3:0])			14	pF	VIN=0V VOUT=0V
CIN	Input Capacitance (except IO pins)			10	pF	VIN=0V
COUT	Output Capacitance (except IO pins)			10	pF	VOUT=0V
C_L	Load Capacitance		30		pF	
	Input Rise And Fall time			5	ns	
	Input Pulse Voltage	0.1VCC to 0.8VCC			V	
	Input Timing Reference Voltage	0.3VCC to 0.7VCC			V	
	Output Timing Reference Voltage	0.5VCC			V	

Figure 92. Absolute Maximum Ratings Diagram

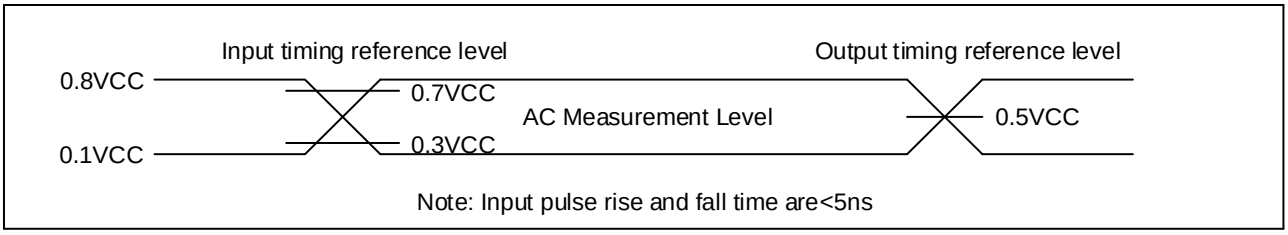

9.5 DC Characteristics

(T_A = -40℃~85℃, VCC=2.7~3.6V)

Symbol	Parameter	Test Condition	Min.	Typ.	Max.	Unit.
I_{LI}	Input Leakage Current				±2	μA
I_{LO}	Output Leakage Current				±2	μA
I_{CC1}	Standby Current	CS#=VCC, VIN=VCC or VSS		16	60	μA
I_{CC2}	Deep Power-Down Current	CS#=VCC, VIN=VCC or VSS		2	25	μA
I_{CC3}	Operating Current (Read)	CLK=0.1VCC / 0.9VCC at 133MHz, Q=Open(x4 I/O)		20	35	mA
		CLK=0.1VCC / 0.9VCC at 90MHz DTR, Q=Open(x4 I/O)		30	45	mA
I_{CC4}	Operating Current (PP)	CS#=VCC		15	30	mA
I_{CC5}	Operating Current (WRSR)	CS#=VCC		15	30	mA
I_{CC6}	Operating Current (SE)	CS#=VCC		15	30	mA
I_{CC7}	Operating Current (BE)	CS#=VCC		15	30	mA
I_{CC8}	Operating Current (CE)	CS#=VCC		15	30	mA
V_{IL}	Input Low Voltage		-0.5		0.3VCC	V
V_{IH}	Input High Voltage		0.7VCC		VCC+0.4	V
V_{OL}	Output Low Voltage	I_{OL} = 100μA			0.2	V
V_{OH}	Output High Voltage	I_{OH} = -100μA	VCC-0.2			V

Note:

1. Typical value at T_A = 25℃, VCC = 3.3V.
2. Value guaranteed by design and/or characterization, not 100% tested in production.

(T_A = -40℃~105℃, VCC=2.7~3.6V)

Symbol	Parameter	Test Condition	Min.	Typ.	Max.	Unit.
I_{LI}	Input Leakage Current				±2	μA
I_{LO}	Output Leakage Current				±2	μA
I_{CC1}	Standby Current	CS#=VCC, VIN=VCC or VSS		16	100	μA
I_{CC2}	Deep Power-Down Current	CS#=VCC, VIN=VCC or VSS		2	50	μA
I_{CC3}	Operating Current (Read)	CLK=0.1VCC / 0.9VCC at 133MHz, Q=Open(x4 I/O)		20	40	mA
		CLK=0.1VCC / 0.9VCC at 90MHz DTR, Q=Open(x4 I/O)		30	50	mA
I_{CC4}	Operating Current (PP)	CS#=VCC		15	35	mA
I_{CC5}	Operating Current (WRSR)	CS#=VCC		15	35	mA
I_{CC6}	Operating Current (SE)	CS#=VCC		15	35	mA
I_{CC7}	Operating Current (BE)	CS#=VCC		15	35	mA
I_{CC8}	Operating Current (CE)	CS#=VCC		15	35	mA
V_{IL}	Input Low Voltage		-0.5		0.3VCC	V
V_{IH}	Input High Voltage		0.7VCC		VCC+0.4	V
V_{OL}	Output Low Voltage	I_{OL} = 100μA			0.2	V
V_{OH}	Output High Voltage	I_{OH} = -100μA	VCC-0.2			V

Note:

1. Typical value at T_A = 25℃, VCC = 3.3V.
2. Value guaranteed by design and/or characterization, not 100% tested in production.

(T_A = -40℃~125℃, VCC=2.7~3.6V)

Symbol	Parameter	Test Condition	Min.	Typ.	Max.	Unit.
I_{LI}	Input Leakage Current				±3	μA
I_{LO}	Output Leakage Current				±3	μA
I_{CC1}	Standby Current	CS#=VCC, VIN=VCC or VSS		16	200	μA
I_{CC2}	Deep Power-Down Current	CS#=VCC, VIN=VCC or VSS		2	100	μA
I_{CC3}	Operating Current (Read)	CLK=0.1VCC / 0.9VCC at 133MHz, Q=Open(x4 I/O)		20	45	mA
		CLK=0.1VCC / 0.9VCC at 84MHz DTR, Q=Open(x4 I/O)		25	50	mA
I_{CC4}	Operating Current (PP)	CS#=VCC		15	40	mA
I_{CC5}	Operating Current (WRSR)	CS#=VCC		15	40	mA
I_{CC6}	Operating Current (SE)	CS#=VCC		15	40	mA
I_{CC7}	Operating Current (BE)	CS#=VCC		15	40	mA
I_{CC8}	Operating Current (CE)	CS#=VCC		15	40	mA
V_{IL}	Input Low Voltage		-0.5		0.3VCC	V
V_{IH}	Input High Voltage		0.7VCC		VCC+0.4	V
V_{OL}	Output Low Voltage	I_{OL} = 100μA			0.2	V
V_{OH}	Output High Voltage	I_{OH} = -100μA	VCC-0.2			V

Note:

1. Typical value at T_A = 25℃, VCC = 3.3V.
2. Value guaranteed by design and/or characterization, not 100% tested in production.

9.6 AC Characteristics

(T_A = -40℃~85℃, VCC=2.7~3.6V)

Symbol	Parameter	Min.	Typ.	Max.	Unit.
f_{C1}	Serial Clock Frequency for all instructions except 03H, 13H, EEH, EDH			133	MHz
f_{C2}	Serial Clock Frequency for DTR Quad I/O Fast Read (EEH, EDH) instructions			90	MHz
f_R	Serial Clock Frequency For: Read (03H, 13H)			60	MHz
t_{CLH}	Serial Clock High Time	45% ($1/fc_{max}$)			ns
t_{CLL}	Serial Clock Low Time	45% ($1/fc_{max}$)			ns
t_{CLCH} t_{CHCL}	Serial Clock Rise/Fall Time (Slew Rate) (fSCLK≤50MHz)	0.1			V/ns
	Serial Clock Rise/Fall Time (Slew Rate) (fSCLK>50MHz)	0.2			V/ns
t_{SLCH}	CS# Active Setup Time	4			ns
t_{CHSH} t_{CLSH}	CS# Active Hold Time	4			ns
t_{SHCH}	CS# Not Active Setup Time	5			ns
t_{CHSL}	CS# Not Active Hold Time	5			ns
t_{SHSL}	CS# High Time (Read)	20			ns
	CS# High Time (Write)	40			ns
t_{SHQZ}	Output Disable Time			8	ns
t_{CLQX} t_{CHQX}	Output Hold Time	1.8			ns
t_{DVCH}	Data In Setup Time (STR)	2			ns
t_{DVCH} t_{DVCL}	Data In Setup Time (DTR)	1			ns
t_{CHDX}	Data In Hold Time (STR)	2			ns
t_{CHDX} t_{CLDX}	Data In Hold Time (DTR)	1			ns
t_{CLQV} t_{CHQV}	Clock Low To Output Valid (VCC=2.7~3.0V, loading=30pF)			8	ns
	Clock Low To Output Valid (VCC=2.7~3.0V, loading=10pF)			7	ns
	Clock Low To Output Valid (VCC=3.0~3.6V, loading=30pF, CR<3> = xxxx xx00b)			7	ns
	Clock Low To Output Valid (VCC=3.0~3.6V, loading=10pF,CR<3> = xxxx xx00b)			6	ns
t_{WHSL}	Write Protect Setup Time Before CS# Low	20			ns
t_{SHWL}	Write Protect Hold Time After CS# High	100			ns

t_{DP}	CS# High To Deep Power-Down Mode			3	μs
t_{RES1}	CS# High To Standby Mode Without Electronic Signature Read			30	μs
t_{SUS}	CS# High To Next Command After Suspend			20	μs
t_{RS}(4)	Latency Between Resume And Next Suspend	100			μs
t_{RST}	CS# High To Next Command After Reset (From Read or From Program)			40	μs
t_{RST_E}	CS# High To Next Command After Reset (From Erase or From Write Status/Non-volatile Configuration Register)			25	ms
t_W	Write Status/Non-Volatile Configuration Register Cycle Time		5	30	ms
t_{BP1}	Byte Program Time (First Byte)		30	50	μs
t_{BP2}	Additional Byte Program Time (After First Byte)		2.5	12	μs
t_{PP}	Page Programming Time		0.15	1.0	ms
t_{SE}	Sector Erase Time		30	400	ms
t_{BE1}	Block Erase Time (32K Bytes)		0.15	1.5	s
t_{BE2}	Block Erase Time (64K Bytes)		0.22	2	s
t_{CE}	Chip Erase Time (GD25B512ME)		150	300	s

Note:

1. Typical value at T_A = 25℃.
2. Value guaranteed by design and/or characterization, not 100% tested in production.
3. Time of CS# High To Next Command After Reset from 01H/B1H command would be t_W + t_{RST}
4. Minimum timing must be observed before issuing the next suspend command, and a period equal to or longer than the minimum timing is required in order for the program or erase operation to make progress, but the operation time may exceed the maximum value

(T_A = -40℃~105℃, VCC=2.7~3.6V)

Symbol	Parameter	Min.	Typ.	Max.	Unit.
f_{C1}	Serial Clock Frequency for all instructions except 03H, 13H, EEH, EDH			133	MHz
f_{C2}	Serial Clock Frequency for DTR Quad I/O Fast Read (EEH, EDH) instructions			90	MHz
f_R	Serial Clock Frequency For: Read (03H, 13H)			60	MHz
t_{CLH}	Serial Clock High Time	45% ($1/fc_{max}$)			ns
t_{CLL}	Serial Clock Low Time	45% ($1/fc_{max}$)			ns
t_{CLCH} t_{CHCL}	Serial Clock Rise/Fall Time (Slew Rate) (fSCLK≤50MHz)	0.1			V/ns
	Serial Clock Rise/Fall Time (Slew Rate) (fSCLK>50MHz)	0.2			V/ns
t_{SLCH}	CS# Active Setup Time	4			ns
t_{CHSH} t_{CLSH}	CS# Active Hold Time	4			ns
t_{SHCH}	CS# Not Active Setup Time	5			ns
t_{CHSL}	CS# Not Active Hold Time	5			ns
t_{SHSL}	CS# High Time (Read)	20			ns
	CS# High Time (Write)	40			ns
t_{SHQZ}	Output Disable Time			8	ns
t_{CLQX} t_{CHQX}	Output Hold Time	1.8			ns
t_{DVCH}	Data In Setup Time (STR)	2			ns
t_{DVCH} t_{DVCL}	Data In Setup Time (DTR)	1			ns
t_{CHDX}	Data In Hold Time (STR)	2			ns
t_{CHDX} t_{CLDX}	Data In Hold Time (DTR)	1			ns
t_{CLQV} t_{CHQV}	Clock Low To Output Valid (VCC=2.7~3.0V, loading=30pF)			8	ns
	Clock Low To Output Valid (VCC=2.7~3.0V, loading=10pF)			7	ns
	Clock Low To Output Valid (VCC=3.0~3.6V, loading=30pF, CR<3> = xxxx xx00b)			7	ns
	Clock Low To Output Valid (VCC=3.0~3.6V, loading=10pF,CR<3> = xxxx xx00b)			6	ns
t_{WHSL}	Write Protect Setup Time Before CS# Low	20			ns
t_{SHWL}	Write Protect Hold Time After CS# High	100			ns
t_{DP}	CS# High To Deep Power-Down Mode			3	μs

t_{RES1}	CS# High To Standby Mode Without Electronic Signature Read			30	μs
t_{SUS}	CS# High To Next Command After Suspend			20	μs
t_{RS}(4)	Latency Between Resume And Next Suspend	100			μs
t_{RST}	CS# High To Next Command After Reset (From Read or From Program)			40	μs
t_{RST_E}	CS# High To Next Command After Reset (From Erase or From Write Status/Non-volatile Configuration Register)			25	ms
t_W	Write Status/Non-Volatile Configuration Register Cycle Time		5	40	ms
t_{BP1}	Byte Program Time (First Byte)		30	140	μs
t_{BP2}	Additional Byte Program Time (After First Byte)		2.5	25	μs
t_{PP}	Page Programming Time		0.15	2.0	ms
t_{SE}	Sector Erase Time		30	600	ms
t_{BE1}	Block Erase Time (32K Bytes)		0.15	1.6	s
t_{BE2}	Block Erase Time (64K Bytes)		0.22	3	s
t_{CE}	Chip Erase Time (GD25B512ME)		150	450	s

Note:

1. Typical value at T_A = 25℃.
2. Value guaranteed by design and/or characterization, not 100% tested in production.
3. Time of CS# High To Next Command After Reset from 01H/B1H command would be t_W + t_{RST}
4. Minimum timing must be observed before issuing the next suspend command, and a period equal to or longer than the minimum timing is required in order for the program or erase operation to make progress, but the operation time may exceed the maximum value

(T_A = -40℃~125℃, VCC=2.7~3.6V)

Symbol	Parameter	Min.	Typ.	Max.	Unit.
f_{C1}	Serial Clock Frequency for all instructions except 03H, 13H, EEH, EDH			133	MHz
f_{C2}	Serial Clock Frequency for DTR Quad I/O Fast Read (EEH, EDH) instructions			84	MHz
f_R	Serial Clock Frequency For: Read (03H, 13H)			60	MHz
t_{CLH}	Serial Clock High Time	45% ($1/fc_{max}$)			ns
t_{CLL}	Serial Clock Low Time	45% ($1/fc_{max}$)			ns
t_{CLCH} t_{CHCL}	Serial Clock Rise/Fall Time (Slew Rate) (fSCLK≤50MHz)	0.1			V/ns
	Serial Clock Rise/Fall Time (Slew Rate) (fSCLK>50MHz)	0.2			V/ns
t_{SLCH}	CS# Active Setup Time	4			ns
t_{CHSH} t_{CLSH}	CS# Active Hold Time	4			ns
t_{SHCH}	CS# Not Active Setup Time	5			ns
t_{CHSL}	CS# Not Active Hold Time	5			ns
t_{SHSL}	CS# High Time (Read)	20			ns
	CS# High Time (Write)	40			ns
t_{SHQZ}	Output Disable Time			8	ns
t_{CLQX} t_{CHQX}	Output Hold Time	1.8			ns
t_{DVCH}	Data In Setup Time (STR)	2			ns
t_{DVCH} t_{DVCL}	Data In Setup Time (DTR)	1			ns
t_{CHDX}	Data In Hold Time (STR)	2			ns
t_{CHDX} t_{CLDX}	Data In Hold Time (DTR)	1			ns
t_{CLQV} t_{CHQV}	Clock Low To Output Valid (VCC=2.7~3.0V, loading=30pF)			8	ns
	Clock Low To Output Valid (VCC=2.7~3.0V, loading=10pF)			7	ns
	Clock Low To Output Valid (VCC=3.0~3.6V, loading=30pF, CR<3> = xxxx xx00b)			7	ns
	Clock Low To Output Valid (VCC=3.0~3.6V, loading=10pF,CR<3> = xxxx xx00b)			6	ns
t_{WHSL}	Write Protect Setup Time Before CS# Low	20			ns
t_{SHWL}	Write Protect Hold Time After CS# High	100			ns
t_{DP}	CS# High To Deep Power-Down Mode			3	μs

t_{RES1}	CS# High To Standby Mode Without Electronic Signature Read			30	μs
t_{SUS}	CS# High To Next Command After Suspend			20	μs
t_{RS}(4)	Latency Between Resume And Next Suspend	100			μs
t_{RST}	CS# High To Next Command After Reset (From Read or From Program)			40	μs
t_{RST_E}	CS# High To Next Command After Reset (From Erase or From Write Status/Non-volatile Configuration Register)			25	ms
t_W	Write Status/Non-Volatile Configuration Register Cycle Time		5	40	ms
t_{BP1}	Byte Program Time (First Byte)		30	140	μs
t_{BP2}	Additional Byte Program Time (After First Byte)		2.5	25	μs
t_{PP}	Page Programming Time		0.15	2.0	ms
t_{SE}	Sector Erase Time		30	800	ms
t_{BE1}	Block Erase Time (32K Bytes)		0.15	1.6	s
t_{BE2}	Block Erase Time (64K Bytes)		0.22	3	s
t_{CE}	Chip Erase Time (GD25B512ME)		150	500	s

Note:

1. Typical value at T_A = 25℃.
2. Value guaranteed by design and/or characterization, not 100% tested in production.
3. Time of CS# High To Next Command After Reset from 01H/B1H command would be t_W + t_{RST}
4. Minimum timing must be observed before issuing the next suspend command, and a period equal to or longer than the minimum timing is required in order for the program or erase operation to make progress, but the operation time may exceed the maximum value

Figure 93. Serial Input Timing

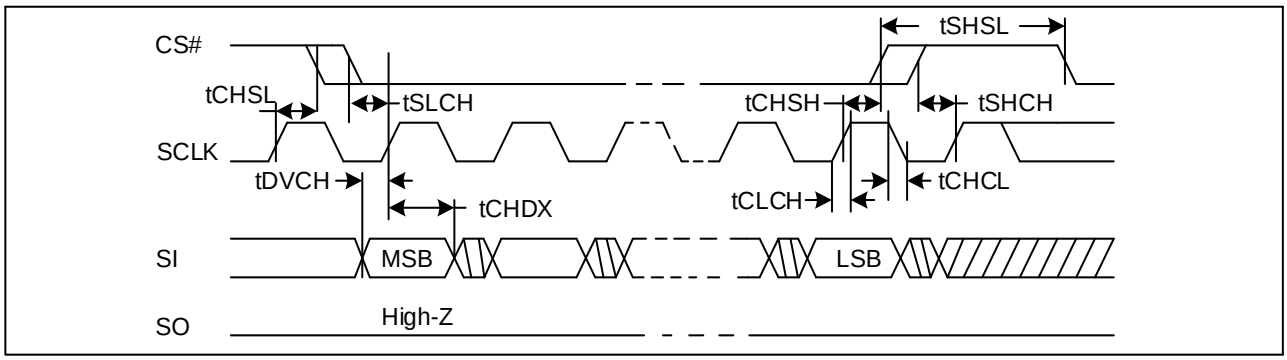

Figure 94. Output Timing

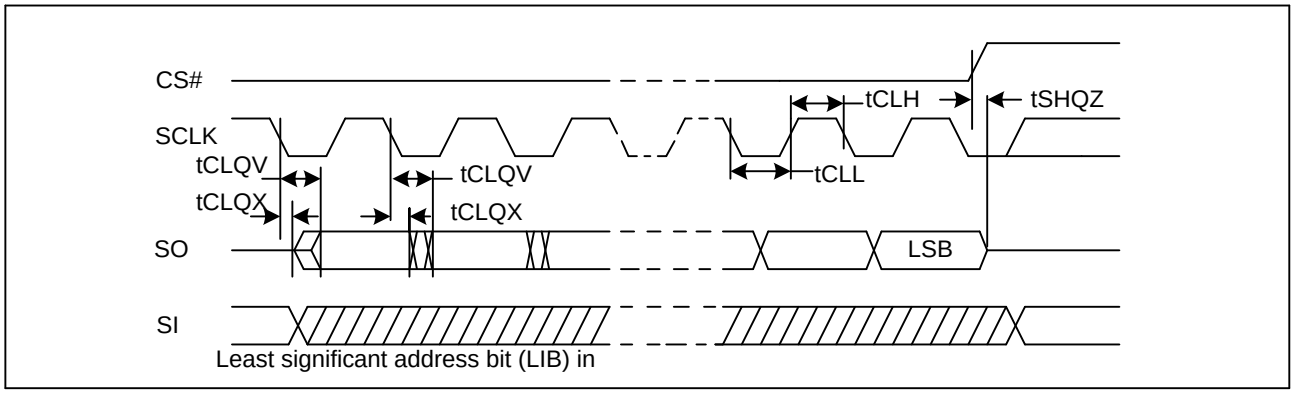

Figure 95. Serial Input Timing (DTR)

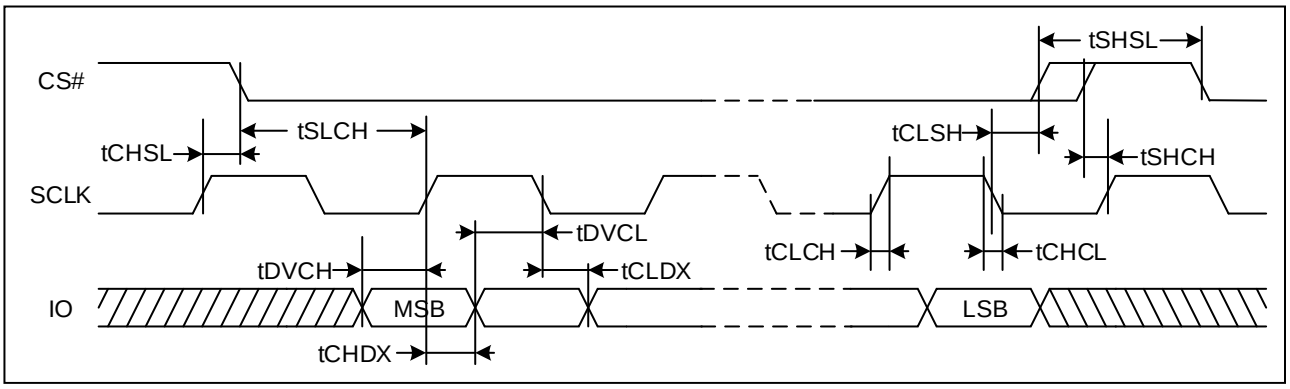

Figure 96. Serial Output Timing (DTR)

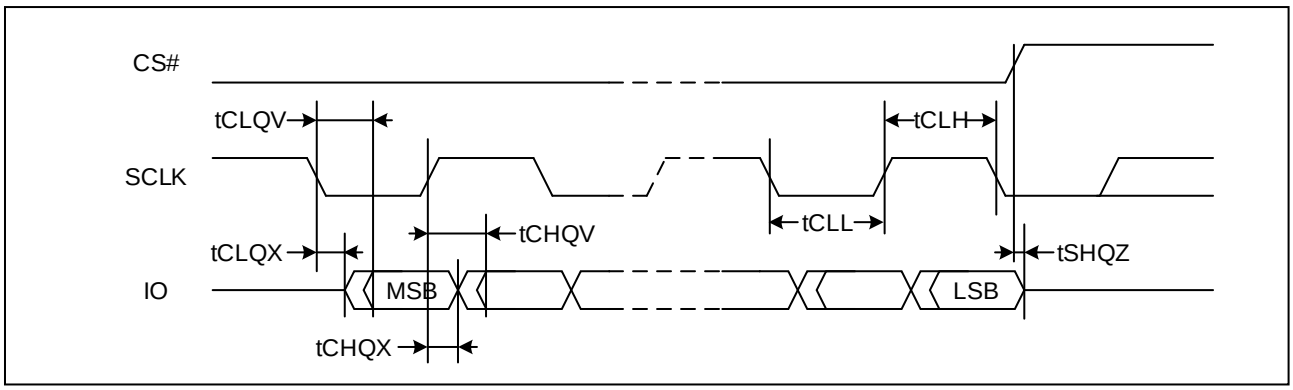

Figure 97. Resume to Suspend Timing Diagram

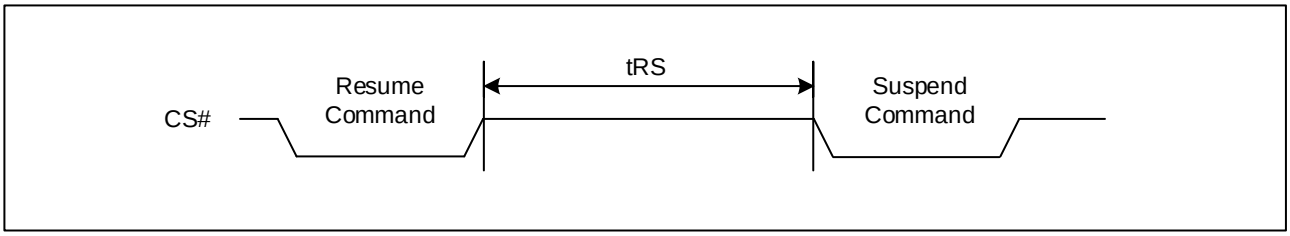

Figure 98. WP# Timing

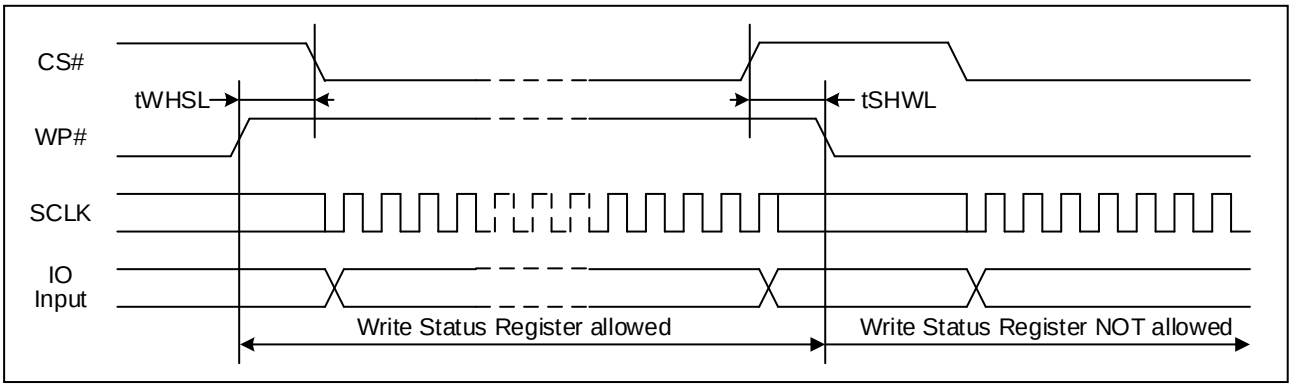

Figure 99. RESET Timing

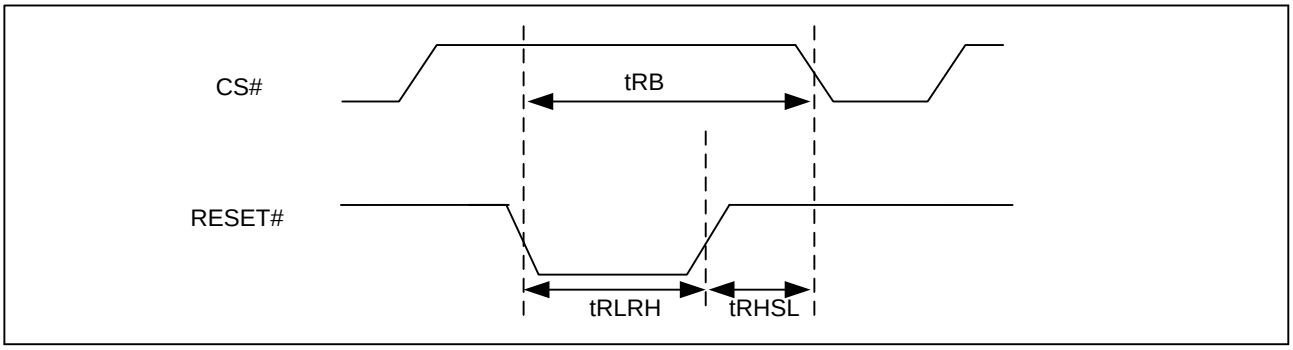

Table 17. Reset Timing

Symbol	Parameter	Min.	Typ.	Max.	Unit.
t_{RLRH}	Reset Pulse Width	1			μs
t_{RHSL}	Reset Hold time before next Operation	50			ns
t_{RB}	Reset Recovery Time (From Read or Program)			40	μs
	Reset Recovery Time (From Erase)			25	ms

Note:

1. Time of Reset Recovery Time from 01H/B1H command would be t_W + t_{RB}
2. The device need $t_{RB\ (max)}$ at most to get ready for all commands after RESET# low.

10 ORDERING INFORMATION

GD XX XX XX X X X X X

Packing
T or no mark: Tube
Y: Tray
R: Tape and Reel

Green Code
G: Pb Free + Halogen Free Green Package
S: Pb Free + Halogen Free Green Package + SRP1 Function
R: Pb Free + Halogen Free Green Package + RESET# Pin
K: Pb Free + Halogen Free Green Package + RESET# Pin + SRP1 Function

Temperature Range
I: Industrial (-40℃ to +85℃)
J: Industrial+ (-40℃ to +105℃)
E: Industrial+ (-40℃ to +125℃)
F: Industrial+ (-40℃ to +85℃)**
3: Automotive (-40℃ to +85℃)*
2: Automotive (-40℃ to +105℃)*
A: Automotive (-40℃ to +125℃)*

Package Type
F: SOP16 300mil
Y: WSON8 (8x6mm)
B: TFBGA-24ball (5x5 Ball Array)

Generation
E: E Version

Density
512M: 512M bit

Series
B: 3V, 4KB Uniform Sector, default x4I/O

Product Family
25: SPI NOR Flash

***Please contact GigaDevice sales for automotive products.**

****F grade has implemented additional test flows to ensure higher product quality than I grade.**

10.1 Valid Part Numbers

Please contact GigaDevice regional sales for the latest product selection and available form factors.

Temperature Range I: Industrial (-40℃ to +85℃)

Product Number	Clock	Density	Package Type	Packing Options
GD25B512MEFIR	133MHz	512Mbit	SOP16 300mil	T/Y/R
GD25B512MEFIK	133MHz			T/Y/R
GD25B512MEYIG	133MHz	512Mbit	WSON8 (8x6mm)	Y/R
GD25B512MEYIS	133MHz			Y/R
GD25B512MEBIR	133MHz	512Mbit	TFBGA-24ball (5x5 Ball Array)	Y/R
GD25B512MEBIK	133MHz			Y/R

Temperature Range J: Industrial+ (-40℃ to +105℃)

Product Number	Clock	Density	Package Type	Packing Options
GD25B512MEFJR	133MHz	512Mbit	SOP16 300mil	T/Y/R
GD25B512MEFJK	133MHz			T/Y/R
GD25B512MEYJG	133MHz	512Mbit	WSON8 (8x6mm)	Y/R
GD25B512MEYJS	133MHz			Y/R
GD25B512MEBJR	133MHz	512Mbit	TFBGA-24ball (5x5 Ball Array)	Y/R
GD25B512MEBJK	133MHz			Y/R

Temperature Range E: Industrial+ (-40℃ to +125℃)

Product Number	Clock	Density	Package Type	Packing Options
GD25B512MEFER	133MHz	512Mbit	SOP16 300mil	T/Y/R
GD25B512MEFEK	133MHz			T/Y/R
GD25B512MEYEG	133MHz	512Mbit	WSON8 (8x6mm)	Y/R
GD25B512MEYES	133MHz			Y/R
GD25B512MEBER	133MHz	512Mbit	TFBGA-24ball (5x5 Ball Array)	Y/R
GD25B512MEBEK	133MHz			Y/R

Temperature Range F: Industrial+ (-40℃ to +85℃)

Product Number	Clock	Density	Package Type	Packing Options
GD25B512MEFFR	133MHz	512Mbit	SOP16 300mil	T/Y/R
GD25B512MEFFK	133MHz			T/Y/R
GD25B512MEYFG	133MHz	512Mbit	WSON8 (8x6mm)	Y/R
GD25B512MEYFS	133MHz			Y/R
GD25B512MEBFR	133MHz	512Mbit	TFBGA-24ball (5x5 Ball Array)	Y/R
GD25B512MEBFK	133MHz			Y/R

11 PACKAGE INFORMATION

11.1 Package SOP16 300MIL

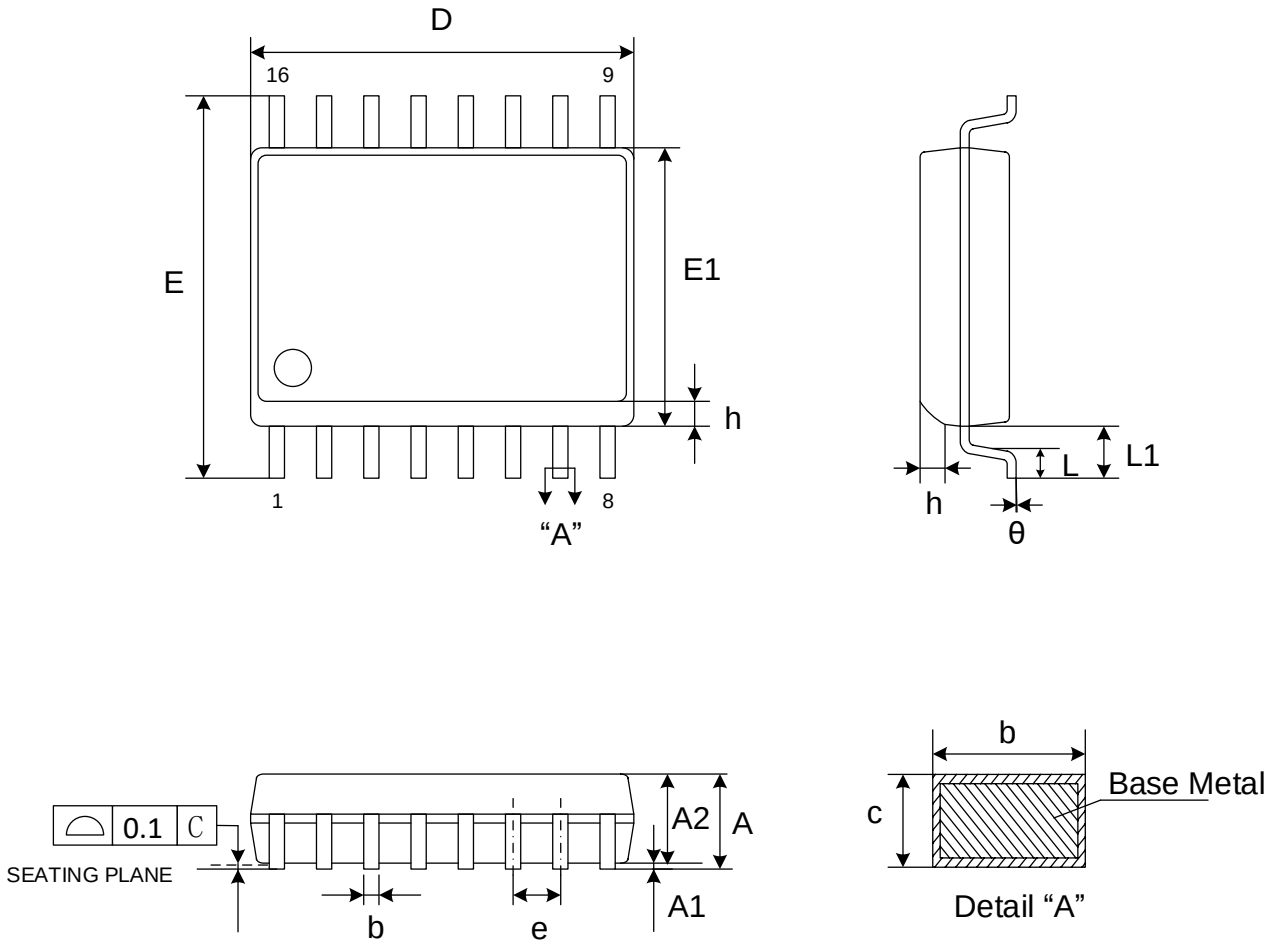

Dimensions

Symbol / Unit		A	A1	A2	b	c	D	E	E1	e	L	L1	h	θ
mm	Min	-	0.10	2.05	0.31	0.10	10.20	10.10	7.40	1.27	0.40	1.40	0.25	0
	Nom	-	0.20	-	0.41	0.25	10.30	10.30	7.50		-		-	-
	Max	2.65	0.30	2.55	0.51	0.33	10.40	10.50	7.60		1.27		0.75	8

Note:

1. Both the package length and width do not include the mold flash.

11.2 Package WSON8 (8x6mm)

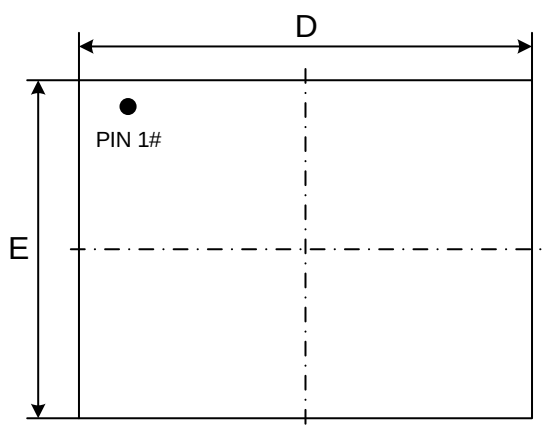

Top View

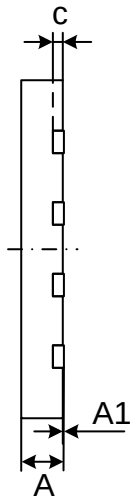

Side View

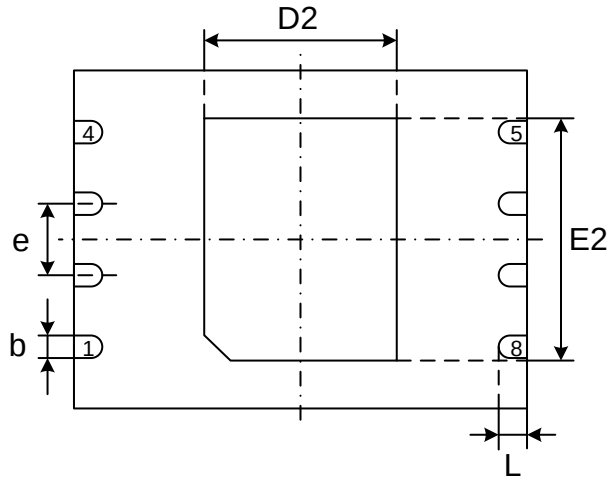

Bottom View

Dimensions

Symbol / Unit		A	A1	c	b	D	D2	E	E2	e	L
mm	Min	0.70	0.00	0.180	0.35	7.90	3.30	5.90	4.20	1.27	0.45
	Nom	0.75	0.02	0.203	0.40	8.00	3.40	6.00	4.30		0.50
	Max	0.80	0.05	0.250	0.45	8.10	3.50	6.10	4.40		0.55

Note:

1. Both the package length and width do not include the mold flash.
2. The exposed metal pad area on the bottom of the package is floating.
3. Coplanarity ≤0.08mm. Package edge tolerance≤0.10mm.
4. The lead shape may be of little difference according to different package lead frames. These lead shapes are compatible with each other.

11.3 Package TFBGA-24BALL (5x5 ball array)

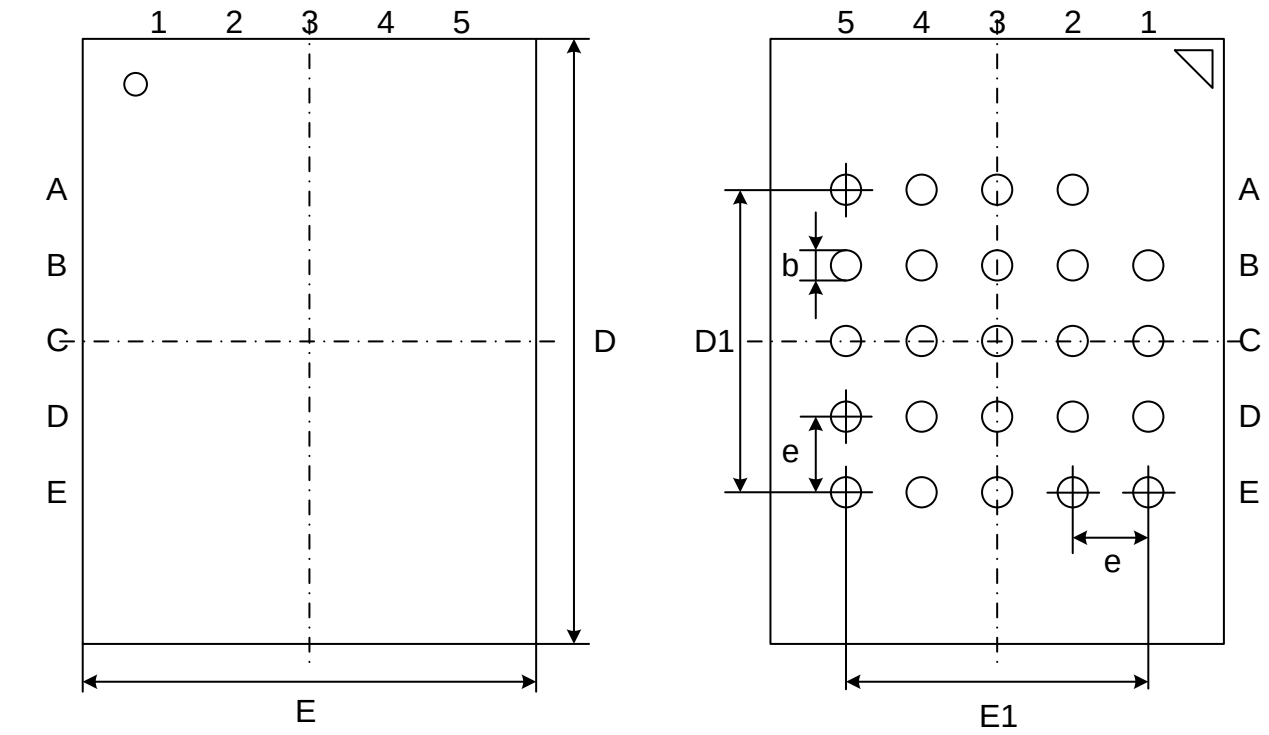

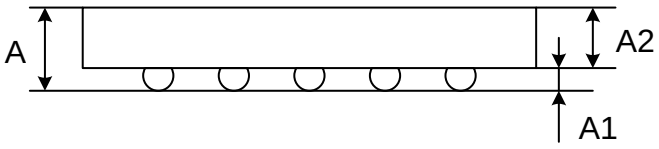

Dimensions

Symbol / Unit		A	A1	A2	b	E	E1	D	D1	e
mm	Min	-	0.25	-	0.35	5.90	4.00	7.90	4.00	1.00
	Nom	-	0.30	0.80	0.40	6.00		8.00		
	Max	1.20	0.35	-	0.45	6.10		8.10		

Note: Both the package length and width do not include the mold flash.

12 REVISION HISTORY

Version No	Description	Page	Date
1.0	Initial Release	All	2020-9-28
1.1	Modify VIL from 0.2VCC to 0.3VCC Modify tCHSH/tCLSH from 3ns to 4ns Modify tSHCH from 3ns to 5ns	P59, 60, 61 P62, 64, 66 P62, 64, 66	2020-12-15
1.2	Update Description of RESET# Modify Quad Output Fast Read(6BH,6CH) Max Frequency from 166Mhz to 133Mhz Modify Supported Clock Frequencies Update I_{LI} / I_{LO} of 125℃ from ±2μA to ±3μA	P5-P7 P4, P59-67 P21 P61	2021-5-10
1.3	Add Note of WP# Pin Modify Typo of DLP Modify Description of AC parameter t_{CLCH}/t_{CHCL} Update Ordering Information Add Coplanarity of SOP16	P6-7 P20-21 P62, P64, P66 P70-72 P73	2022-1-10
1.4	Modify Ordering Information Typo	P71-72	2022-3-7
1.5	Modify Note of WP# Pin Modify Value of AC Parameter t_{CLCH}/t_{CHCL} Add Note of t_{RS}	P6-7 P62, P64, P66 P63, P65, P67	2022-5-11
1.6	Modify Note of RESET# Pin and Remove Note of WP# Pin Modify TFBGA-24Ball Dimensions Table	P6-7 P75	2022-8-23

Important Notice

This document is the property of GigaDevice Semiconductor Inc. and its subsidiaries (the "Company"). This document, including any product of the Company described in this document (the “Product”), is owned by the Company according to the laws of the People’s Republic of China and other applicable laws. The Company reserves all rights under such laws and no Intellectual Property Rights are transferred (either wholly or partially) or licensed (either expressly or impliedly). The names and brands of third party referred thereto (if any) are the property of their respective owner and referred to for identification purposes only.

The Company does not assume any warranty or condition, express or implied, with regard to this document or any Product, including, but not limited to, the implied warranties of merchantability, fitness for any particular purpose, non-infringement, or any warranty arising out of the application or use of any Product described in this document. Any information provided in this document is provided only for reference purposes. It is the responsibility of the user of this document to properly design, program, and test the functionality and safety of any application and any product produced. Except for customized products which has been expressly identified in the applicable agreement, the Products are designed, developed, and/or manufactured for ordinary business, industrial, personal, and/or household applications only. The Products are not designed or intended for use in, and no warranty is made respect to, any applications designed or intended for the operation of weaponry, nuclear equipment, atomic energy control instruments, combustion control instruments, airplane or spaceship instruments, traffic signal instruments, life-support devices or systems, other medical devices or systems (including resuscitation equipment and surgical implants etc.), pollution control or hazardous substances management, or other uses where failure to perform can reasonably be expected to result in personal injury, death, property or environmental damage ("Unintended Uses"). Customers shall take any and all actions to ensure using and selling the Products in accordance with the applicable laws and regulations. The Company is not liable, in whole or in part, and customers shall and hereby do release the Company as well as it’s suppliers and/or distributors from any claim, damage, or other liability arising from or related to all Unintended Uses of the Products. Customers shall indemnify and hold the Company as well as it’s suppliers and/or distributors harmless from and against all claims, costs, damages, and other liabilities, including claims for personal injury or death, arising from or related to any Unintended Uses of the Products. Customers shall discard the device according to the local environmental law.

Information in this document is provided solely in connection with the Products. The Company reserves the right to make changes, corrections, modifications or improvements to this document and the Products and services described herein at any time, without notice. And the company shall have no responsibility whatsoever for conflicts or incompatibilities arising from future changes to them.