MSKSEMI 美森科
SEMICONDUCTOR

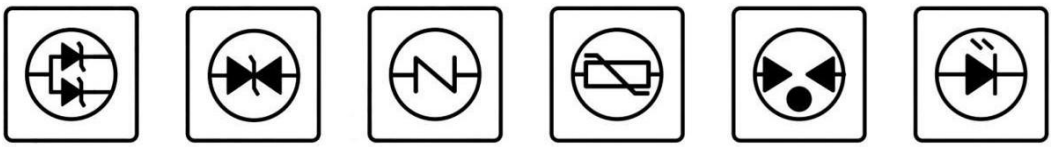

LM358

产品手册

产品简介

LM358 是一款双路低功耗的差分式运算放大器，可以单电源或双电源供电。具有较高的开环增益、内部补偿、高共模范围和良好的温度稳定性，以及具有输出短路保护的特点。广泛应用于传感器的放大电路、直流放大模块、音频放大电路和传统的运算放大电路中。

产品特点

- 内部频率补偿
- 短路保护
- 低功耗：典型值 0.5mA @V_{CC}=5V
- 封装形式：DIP-8、SOP-8
- 单电源电压范围：3V～36V
- 双电源电压范围：±18V
- 单位增益带宽:可达 1.2MHZ

产品用途

- 传感器信号放大器
- 直流增益
- 音频放大器
- 其它应用领域

封装形式和管脚功能定义

封装形式		管脚定义	丝印	
	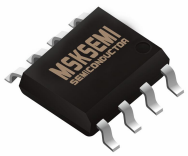	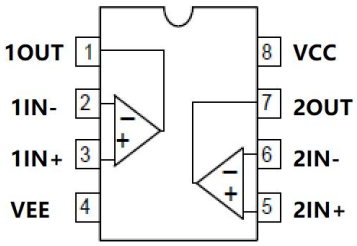	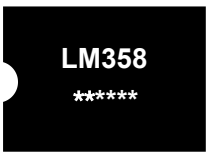	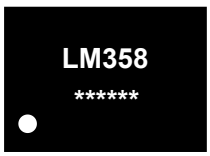
DIP-8	SOP-8		DIP-8	SOP-8

Notes :******Represent production order code

DIP-8/SOP-8 管脚序号	管脚定义	功能说明
1	1OUT	第 1 路运放输出
2	1IN-	第 1 路运放反相输入
3	1IN+	第 1 路运放正相输入
4	VEE	负电源
5	2IN+	第2路运放正相输入
6	2IN-	第2路运放反相输入
7	2OUT	第2路运放输出
8	VCC	正电源

Copyright© Msksemi Incorporated

极限参数

项目	符号	极限值(1)	单位
单电源供电电压	V_{cc}	40	V
双电源供电电压	Vs	±20	V
差分输入电压(2)	V_{ID}	±40	V
共模输入电压	V_{ICR}	-0.3～40V	V
输出短路时间	t_{sc}	连续	
耗散功率	P_D	400	mW
工作温度	T_A	0-70	℃
储存温度	T_S	-65-150	℃
焊接温度	T_W	260, 10s	℃

注：（1）极限值是指无论在任何条件下都不能超过的极限值。如果达到此极限值，将有可能造成产品劣化等物理性损伤；同时在接近极限参数下，不能保证芯片可以正常工作。

（2）输入端 IN+相对于 IN-之间的电压差。

等效原理图

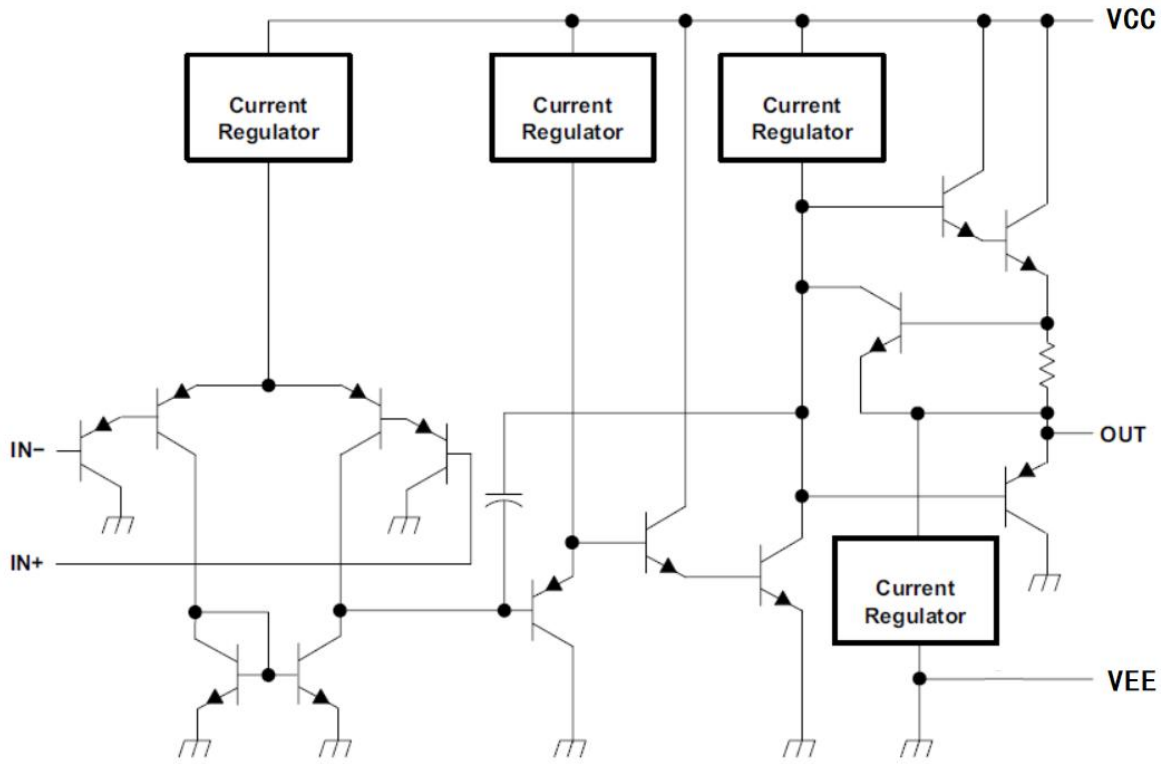

Copyright© Msksemi Incorporated

直流电学特性 （T_A=25℃， VCC=5V,VEE=GND 除非特别指定）

项目	符号	测试条件		最小值	典型值	最大值	单位
输入失调电压	V_{IO}	VCC=5V to MAX,V_{IC}=V_{ICR} (min),VO=1.4V		_	5	_	mV
输入失调电流	I_{IO}	VO = 1.4 V		–	10	50	nA
偏置电流	I_{BIAS}	VO = 1.4 V		–	50	250	nA
共模输入电压	V_{ICR}	VCC=5V to 36V		VEE	_	VCC-1.5V	V
开环电压增益	A_{OL}	VCC=15V,VO=1V to 11V,RL≥2k Ω			100	_	V/mV
共模抑制比	CMRR	VCC=5V to MAX,V_{IC}=V_{ICR} (min)		_	80	_	dB
单位增益带宽	GBWP			_	1.2	_	MHZ
电源电压抑制比P_{SSR}	$\Delta V_{VDD}/\Delta V_{IO}$	VCC=5V to MAX, f=20kHz		–	90	–	dB
串扰衰减抑制比CS	V_{O1}/V_{O2}	f=1kHz to 20kHz		_	120	_	dB
输出高电平电压	VOH	VCC=15V, V_{ID}=1V	Iout =-50uA	_	13.6	_	V
			Iout =-1mA	_	13.5	_	V
			Iout =-5mA	_	13.4	_	V
		VCC=28V	RL=2k		26	–	V
输出低电平电压	VOL	VCC=15V, V_{ID}=-1V	Iout =50uA	_	0.1	_	V
			Iout =1mA	_	0.7	_	V
			Iout =5mA	_	1.0	_	V
		VCC=28V	RL=2k	–	0.85	–	V
输出短路电流	I_{OS}	VCC=5V,VEE=-5V,VO=0V		–	±24	–	mA
电源工作电流	I_{CC}	VCC=5V,VO=1/2VCC, No load		–	0.5	–	mA
		VCC=36,VO=1/2VCC, No load		_	0.8	_	mA
单电源工作电压	VCC	VEE=0V(GND)		3	_	36	V
双电源工作电压	VS	VCC,VEE		-18	–	+18	V

典型应用

1、线路图

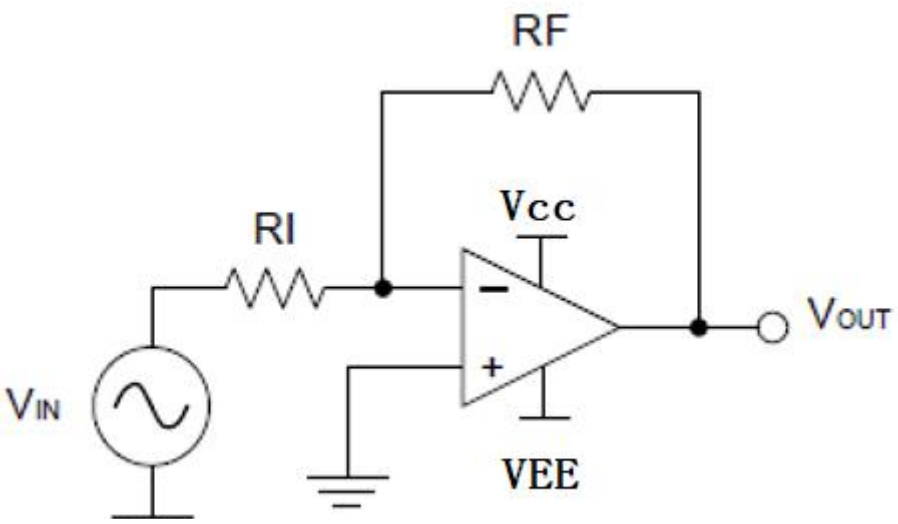

2、设计要求

必须选择大于输入电压范围和输出范围的电源电压。

例如，将信号源 VIN 从±0.5 V 放大到±1.8V。将电源设置为± 5 V 足以适应此应用要求。

3、设计过程

根据公式(1)计算放大倍数(增益) A_V

A_V =-VO/VIN ------(1)

A_V =-VO/VIN=-1.8/0.5=-3.6

一旦确定了所需的增益 A_V，就要为 RI 或 RF 电阻选择一个值。根据运放的电特性及功耗的需要，可选择 1kΩ-100kΩ范围内的值。本例将选择 RI=10 kΩ，则 RF=36kΩ。这由方程式 2 确定。

A_V =-RF/RI --------(2)

RF= -A_V * RI=3.6*10 = 36 kΩ

4、应用曲线图

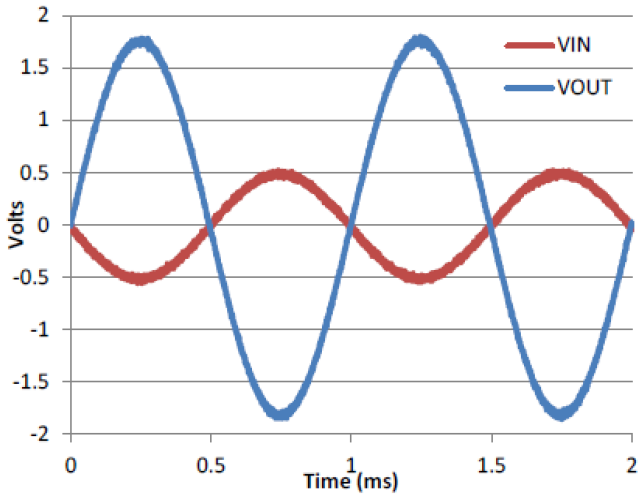

反相放大器的输入电压 VS 输出电压

封装信息

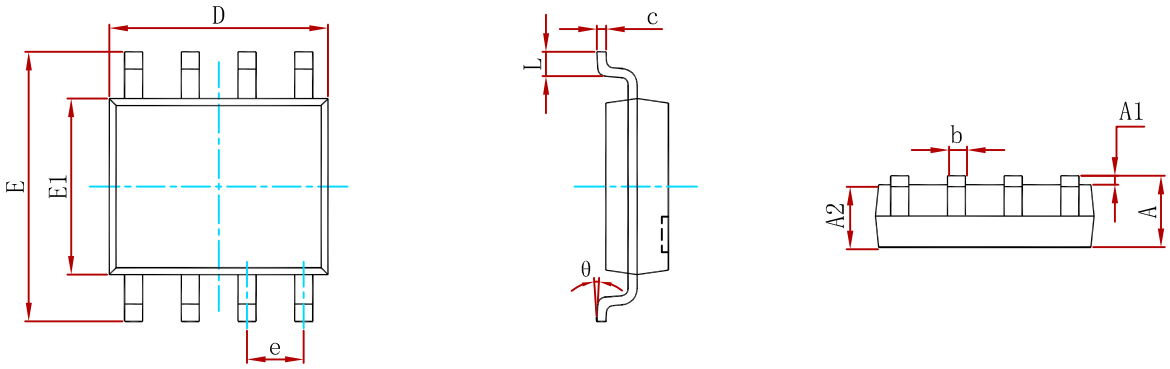

Symbol	Dimensions In Millimeters		Dimensions In Inches	
	Min	**Max**	**Min**	**Max**
A	1.350	1.750	0.053	0.069
A1	0.100	0.250	0.004	0.010
A2	1.350	1.550	0.053	0.061
b	0.330	0.510	0.013	0.020
c	0.170	0.250	0.007	0.010
D	4.800	5.000	0.189	0.197
e	1.270（BSC）		0.050（BSC）	
E	5.800	6.200	0.228	0.244
E1	3.800	4.000	0.150	0.157
L	0.400	1.270	0.016	0.050
θ	0°	8°	0°	8°

焊盘尺寸建议

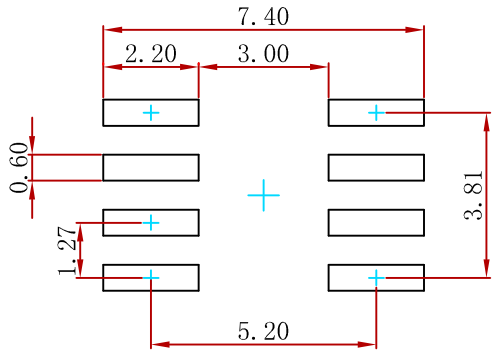

Note:
1.Controlling dimension:in millimeters.
2.General tolerance:±0.05mm.
3.The pad layout is for reference purposes only.

订购信息

P/N	PKG	QTY
LM358	SOP-8	2500

Copyright© Msksemi Incorporated

DIP 8

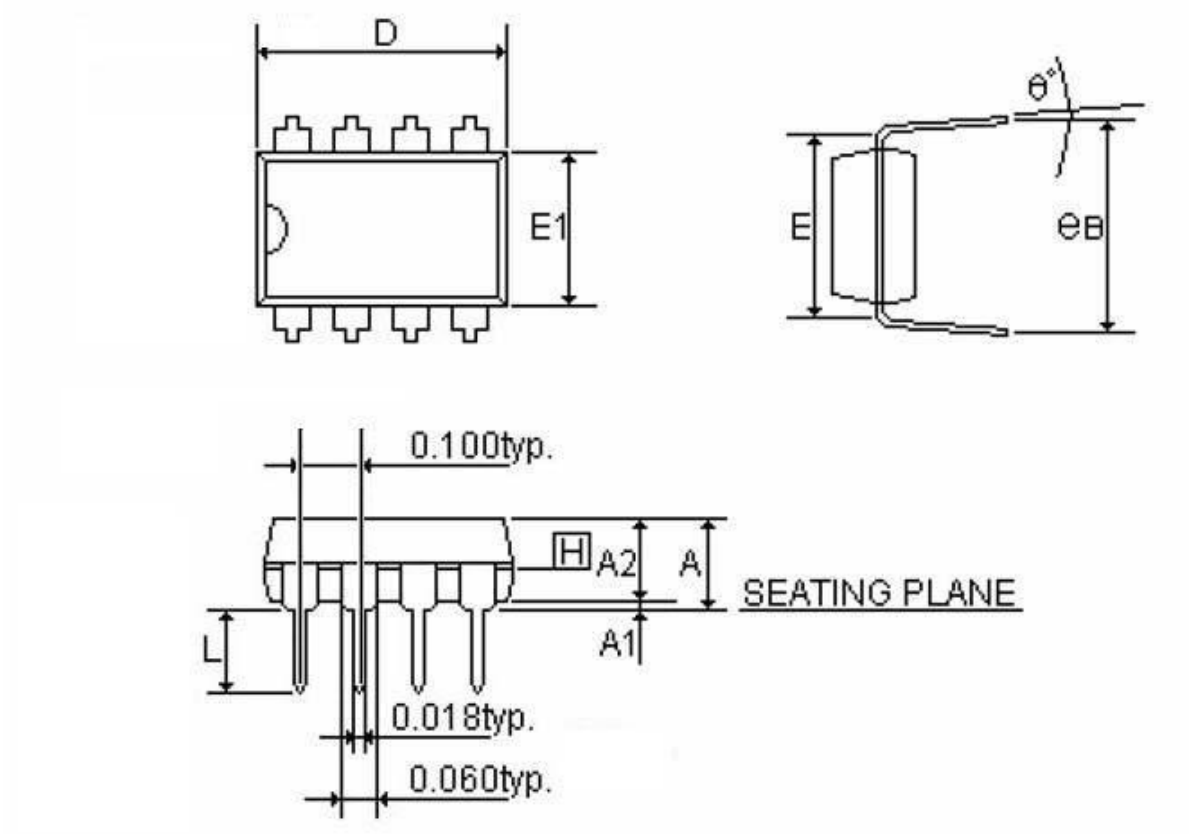

SYMBOLS	MIN	NOR	MAX	MIN	NOR	MAX
	(inch)			(mm)		
A	-	-	0.210	-	-	5.334
A1	0.015	-	-	0.381	-	-
A2	0.125	0.130	0.135	3.175	3.302	3.429
D	0.435	0.455	0.475	15.669	16.050	16.685
E		0.300			7.62	
E1	0.245	0.250	0.255	6.223	6.35	6.477
L	0.115	0.130	0.150	2.921	3.302	3.810
e B	0.335	0.355	0.375	8.509	9.017	9.525
θ°	0°	7°	15°	0°	7°	15°

订购信息

P/N	PKG	QTY
LM358	DIP-8	50

Copyright© Msksemi Incorporated

Attention

■ Any and all MSKSEMI Semiconductor products described or contained herein do not have specifications that can handle applications that require extremely high levels of reliability, such as life-support systems, aircraft's control systems, or other applications whose failure can be reasonably expected to result in serious physical and/or material damage. Consult with your MSKSEMI Semiconductor representative nearest you before using any MSKSEMI Semiconductor products described or contained herein in such applications.

■ MSKSEMI Semiconductor assumes no responsibility for equipment failures that result from using products at values that exceed, even momentarily, rated values (such as maximum ratings, operating condition ranges, or other parameters) listed in products specificationsof any andall MSKSEMI Semiconductor products described orcontained herein.

■ Specifications of any and all MSKSEMI Semiconductor products described or contained herein stipulate the performance, characteristics, and functions of the described products in the independent state, and are not guarantees of the performance, characteristics, and functions of the described products as mounted in the customer's products or equipment. To verify symptoms and states that cannot be evaluated in an independent device, the customer should always evaluate and test devices mounted in the customer'sproducts orequipment.

■ MSKSEMI Semiconductor. strives to supply high-quality high-reliability products. However, any and all semiconductor products fail with someprobability. It is possiblethat these probabilistic failures could give rise to accidents or events that could endanger human lives, that could give rise to smoke or fire, or that could cause damage to other property. When designing equipment, adopt safety measures so that these kinds of accidents or events cannot occur. Such measures include but are not limited to protective circuits anderror prevention circuitsfor safedesign, redundant design, and structural design.

■ In the event that any or all MSKSEMI Semiconductor products(including technical data, services) described or contained herein are controlled under any of applicable local export control laws and regulations, such products must not be exported without obtaining the export license from theauthorities concerned in accordance with the above law.

■ No part of this publication may be reproduced or transmitted in any form or by any means, electronic or mechanical, including photocopying and recording, or any information storage or retrieval system, or otherwise, without the prior written permission of MSKSEMI Semiconductor.

■ Information (including circuit diagrams and circuit parameters) herein is for example only ; it is not guaranteed for volume production. MSKSEMI Semiconductor believes information herein is accurate and reliable, but no guarantees are made or implied regarding its use or any infringementsof intellectual property rights or other rightsof third parties.

■ Any and all information described or contained herein are subject to change without notice due to product/technology improvement, etc. Whendesigning equipment, referto the "Delivery Specification" for the MSKSEMI Semiconductor productthat you intend to use.

Copyright© Msksemi Incorporated