ESP-PSRAM64 & ESP-PSRAM64H Datasheet

Version 1.1

Copyright © 2020

芯查查

About This Document

This document introduces the specifications of ESP-PSRAM64 and ESP-PSRAM64H.

Release Notes

Date	Version	Release notes
2018.06	V1.0	First release.
2020.10	V1.1	Updated Appendix–Device Marking Convention.

Documentation Change Notification

Espressif provides email notifications to keep customers updated on changes to technical documentation. Please subscribe at *www.espressif.com/en/subscribe*.

Certification

Please download the product certificate(s) from *here*.

芯查查

Table of Contents

1. Introduction 1

2. Pin Description 2

3. Power-up Initialization 3

4. Wrap Boundary Toggle Operation 4

5. Interface Description 6
   - 5.1. Address Space 6
   - 5.2. Page Size 6
   - 5.3. Power-on Status 6
   - 5.4. Truth Table 6
   - 5.5. Command Termination 7

6. SPI Mode Operations 8
   - 6.1. SPI Read Operations 8
   - 6.2. SPI Write Operations 9
   - 6.3. SPI Quad Mode Enable Operation 10
   - 6.4. SPI Read ID Operation 11

7. QPI Mode Operations 12
   - 7.1. QPI Read Operations 12
   - 7.2. QPI Write Operations 12
   - 7.3. QPI Quad Mode Exit Operation 13

8. Reset Operation 14

9. Input/Output Timing 15

10. Electrical Specifications 16
    - 10.1. Absolute Maximum Ratings 16
    - 10.2. Operating Conditions 16
    - 10.3. Pin Capacitance 16
    - 10.4. DC Electrical Characteristics 17
    - 10.5. AC Electrical Characteristics 17

11. Product Outline Dimension 19

A. Appendix–Device Marking Convention 20

1. Introduction

The ESP-PSRAM64 and ESP-PSRAM64H are 64 Mbit serial pseudo SRAM devices that are organized as 8Mx8 bits. They are fabricated using very high-performance, high-reliability CMOS technology. ESP-PSRAM64 operates at 1.8V and can offer high data bandwidth at 144 MHz clock rate , while ESP-PSRAM64H operates at 3.3V and can support up to 133 MHz clock rate. Note however that burst operations which cross page boundary have a lower max input clock frequency of 84 MHz.

Both of the PSRAM devices are accessed via a simple Serial Peripheral Interface(SPI) compatible serial bus. Additionally, Quad Peripheral Interface (QPI) is supported if the application needs faster data rates. The devices also supports unlimited reads and writes to the memory array.

Note that the information in this data sheet is applicable to both of the PSRAM devices; otherwise, the differences will be specified.

Table 1-1. Ordering Information of ESP-PSRAM64 and ESP-PSRAM64H

Part number	Product density	Package type	Maximum Clock rate	Operating temperature	Product carrier	Green code	Operating voltage	Read/Write operation mode	SPI mode
ESP-PSRAM64	64 Mbit	SOP8-150 mil	144 MHz	–40°C ~ 85°C	Tape & Reel	RoHS Compliant Package and Green/Reach Package	1.8V	1 KB Pages	Standard/ Quad SPI
ESP-PSRAM64H			133 MHz				3.3V		

2. Pin Description

Figure 2-1 shows the pin layout of ESP-PSRAM64 and ESP-PSRAM64H.

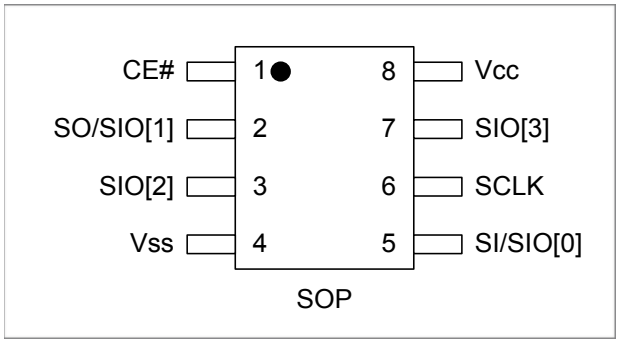

Figure 2-1. Pin Layout of ESP-PSRAM64 and ESP-PSRAM64H

Table 2-1. Signals Table

Pin	Signal Type	SPI Mode Function	QPI Mode Function
V_{CC}	Power	Core supply, 1.8V for ESP-PSRAM64, 3.3V for ESP-PSRAM64H.	
Vss	Ground	Core supply ground	
CE#	Input	Chip select signal, active low. When CE#=1, the chip is in standby state.	
CLK	Input	Clock signal	
SI/SIO[0]	I/O	Serial input	I/O[0]
SO/SIO[1]	I/O	Serial output	I/O[1]
SIO[2]	I/O	-	I/O[2]
SIO[3]	I/O	-	I/O[3]

3. Power-up Initialization

SPI/QPI products include an on-chip voltage sensor used to start the self-initialization process. When Vcc reaches a stable level at or above the minimum Vcc, the device will need 150 µs and user-issued reset operation (see Section 8) to complete its self-initialization process. From the beginning of power ramp to the end of the 150-µs period, CLK should remain low, CE# should remain high (to track Vcc within 200 mV) and SI/SO/SIO[3:0] should remain low.

After the 150-µs period, the device will then be ready for normal operation.

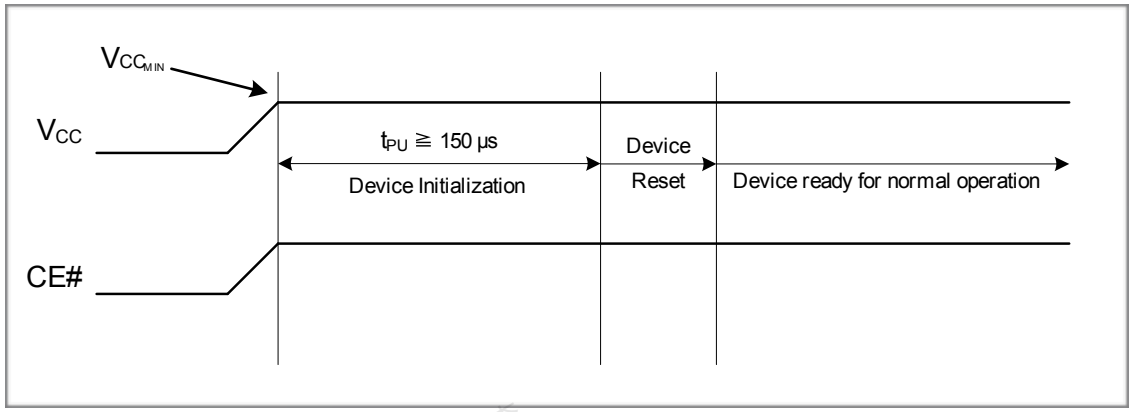

Figure 3-1. Power-up Initialization Timing

4. Wrap Boundary Toggle Operation

The Wrap Boundary Toggle Operation switches the device's wrapped boundary between Linear Burst which crosses the 1K page boundary (CA[9:0]) and wrap 32 (CA[4:0]) bytes. Default setting is Linear Burst.

Linear Burst allows the device to burst through page boundary. Page boundary crossing is invisible to the memory controller and limited to lower max CLK frequency of 84 MHz. Table 4-1 shows an example of the sequence of bytes.

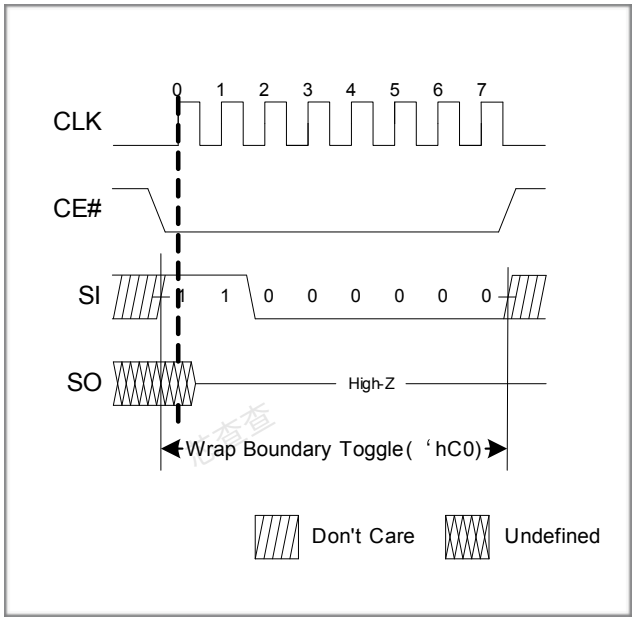

Figure 4-1. SPI Wrap Boundary Toggle 'hC0

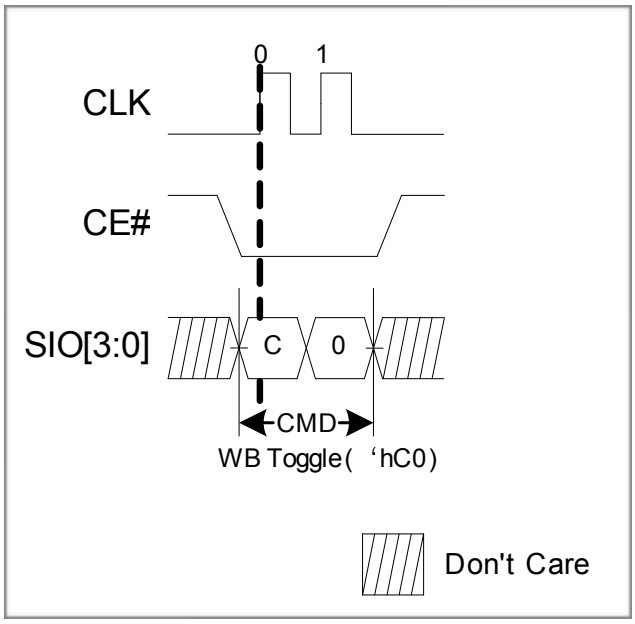

Figure 4-2. QPI Wrap Boundary Toggle 'hC0

Table 4-1. Burst Type/Length

Burst Type/Length	Starting Address	Byte Sequence
Linear Burst	4	[4,5,6,...1023,1024,1025,1026,...]
Wrap 32	4	[4,5,6,...31,0,1,2,...]

芯查查

5. Interface Description

5.1. Address Space

SPI/QPI PSRAM device is byte-addressable. 64M device is addressed with A[22:0].

5.2. Page Size

The page size is 1K (CA[9:0]). Default burst setting is linear bursting that crosses page boundary in a continuous manner. Note however that burst operations which cross page boundary have a lower max input clock frequency of 84 MHz. Optionally, the device can also be set to wrap 32 (CA[4:0]) via the Wrap Boundary Toggle command and is not allowed to cross page boundary in this configuration.

5.3. Power-on Status

The device powers up in SPI Mode. It is required to have CE# high before beginning any operations.

5.4. Truth Table

The device recognizes the following commands specified by the various input methods.

Command	Code	SPI Mode (QE=0)					QPI Mode (QE=1)				
		Cmd	Addr	Wait Cycle	DIO	MAX Freq.	Cmd	Addr	Wait Cycle	DIO	MAX Freq.
Read	'h03	S*note1	S	0	S	33	N/A				
Fast Read	'h0B	S	S	8	S	144/133	N/A				
Fast Read Quad	'hEB	S	Q	6	Q*note1	144/133	Q	Q	6	Q	144/133*note2
Write	'h02	S	S	0	S	144/133	Q	Q	0	Q	144/133*note2
Quad Write	'h38	S	Q	0	Q	144/133	Same as 'h02				
Enter Quad Mode	'h35	S	-	-	-	144/133	N/A				
Exit Quad Mode	'hF5	N/A					Q	-	-	-	144/133
Reset Enable	'h66	S	-	-	-	144/133	Q	-	-	-	144/133
Reset	'h99	S	-	-	-	144/133	Q	-	-	-	144/133
Set Burst Length	'hC0	S	-	-	-	144/133	Q	-	-	-	144/133

Command	Code	SPI Mode (QE=0)					QPI Mode (QE=1)				
		Cmd	Addr	Wait Cycle	DIO	MAX Freq.	Cmd	Addr	Wait Cycle	DIO	MAX Freq.
Read ID	'h9F	S	S	0	S	144/133	N/A				

Notes*:

1. S=Serial I/O; Q=Quad I/O.
2. 144/133 MHz max without crossing page boundary, and 84 MHz max when burst commands cross page boundary.
3. For ESP-PSRAM64, the maximum frequency is 144 MHz, while for ESP-PSRAM64H, it is 133 MHz.

5.5. Command Termination

All Reads & Writes must be completed by raising CE# high immediately afterwards in order to terminate the active command and set the device into standby. Not doing so will block internal refresh operations and cause memory failure.

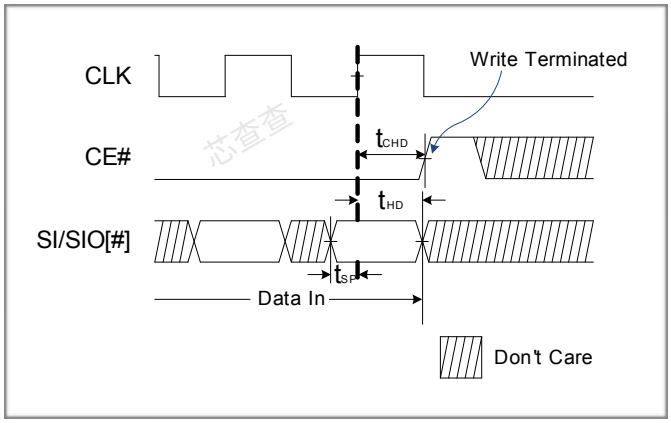

Figure 5-1. Write Command Termination

For a memory controller to correctly latch the last piece of data prior to read termination, it is recommended to provide a longer CE# hold time ($t_{CHD} > t_{ACLK} + t_{CLK}$) for a sufficient data window.

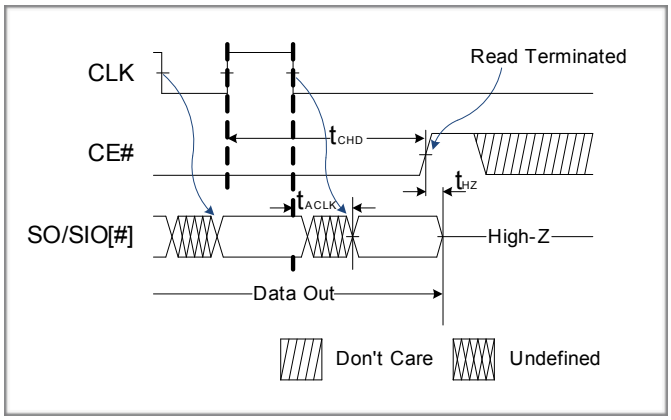

Figure 5-2. Read Command Termination

6. SPI Mode Operations

The device enters SPI mode on power-up by default but can also be switched into QPI mode.

6.1. SPI Read Operations

For all reads, data will be available t_{ACLK} after the falling edge of CLK. SPI reads can be done in three ways:

- ‘h03: Serial CMD, Serial I/O, slow frequency, with linear or burst wrap of 32 byte configurability.
- ‘h0B: Serial CMD, Serial I/O, fast frequency, with burst wrap of 32/1K byte configurability.
- ‘hEB: Serial CMD, Quad I/O, fast frequency, with burst wrap of 32/1K byte configurability.

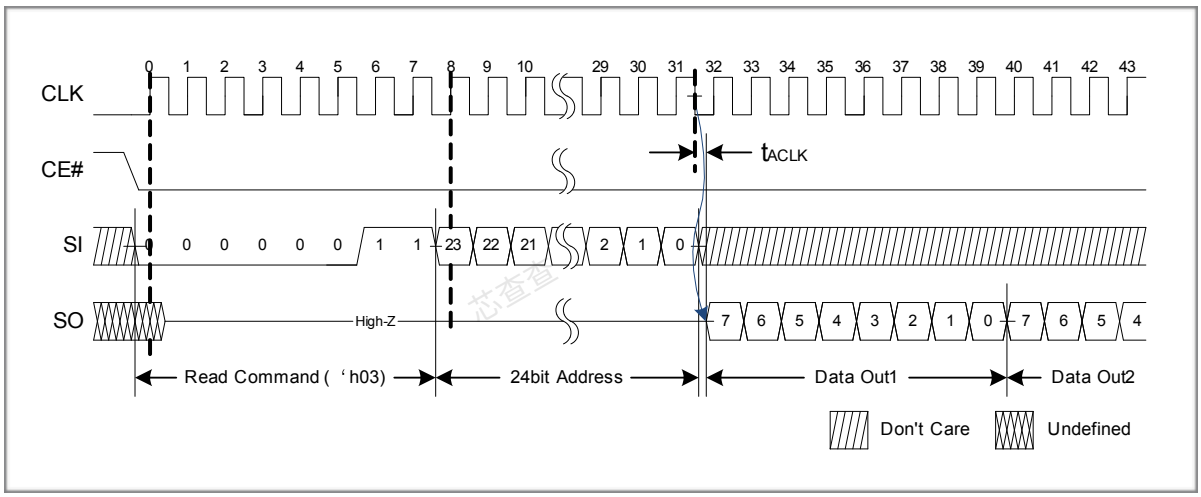

Figure 6-1. SPI Read ‘h03 (Max frequency: 33 MHz)

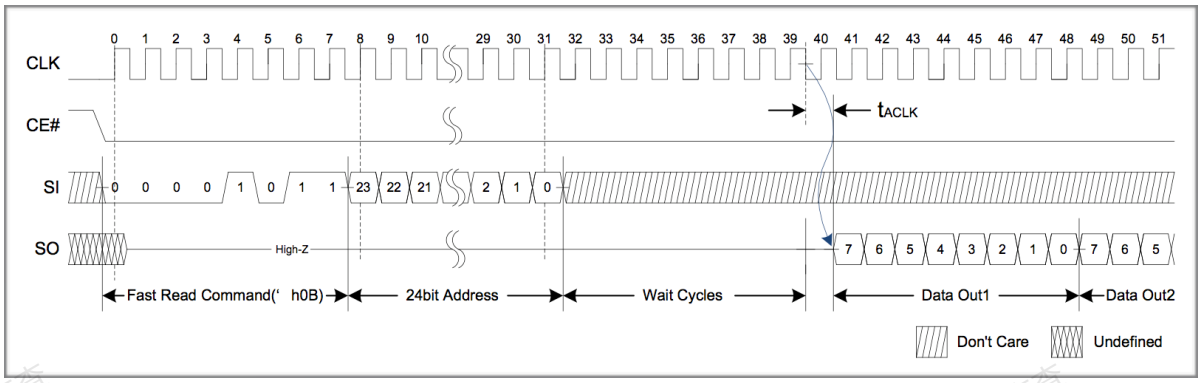

Figure 6-2. SPI Fast Read ‘h0B (Max frequency: 104 MHz)
(Max frequency: 144 MHz for ESP-PSRAM64, 133 MHz for ESP-PSRAM64H)

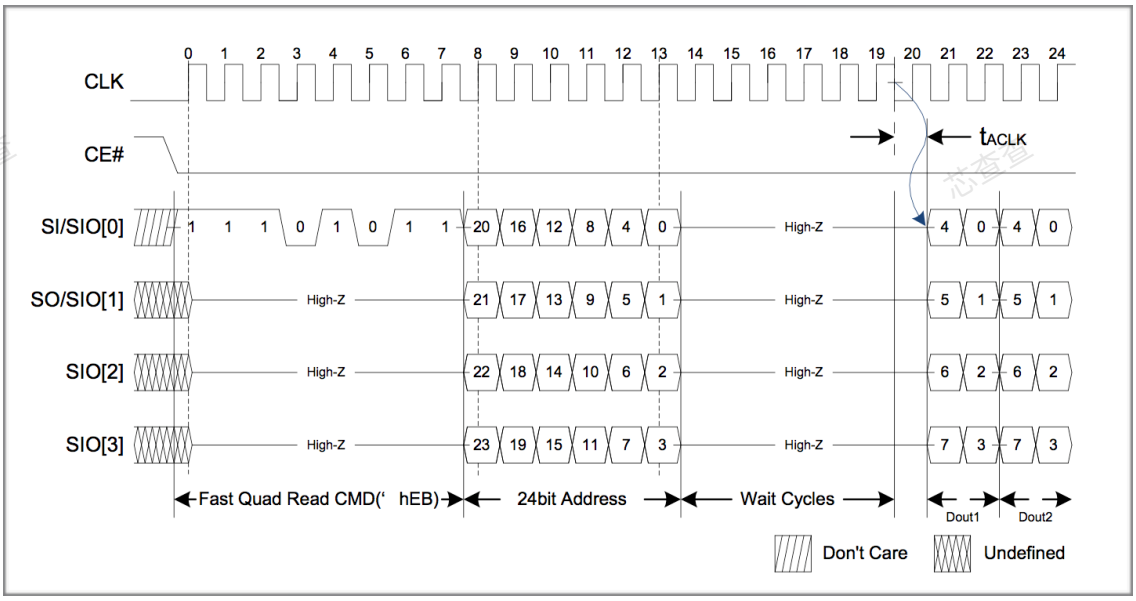

Figure 6-3. SPI Fast Quad Read ‘hEB
(Max frequency: 144 MHz for ESP-PSRAM64, 133 MHz for ESP-PSRAM64H)

6.2. SPI Write Operations

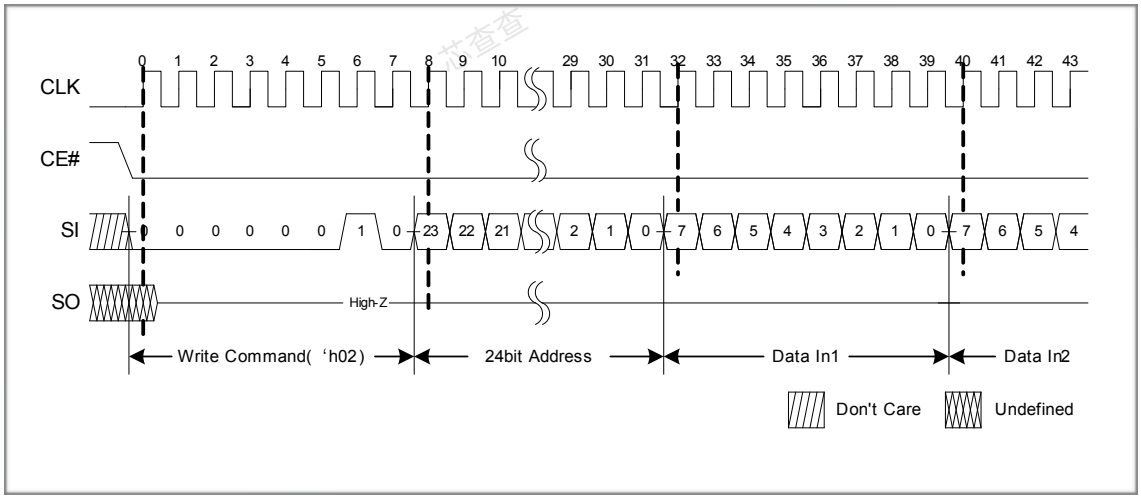

Figure 6-4. SPI Write ‘h02

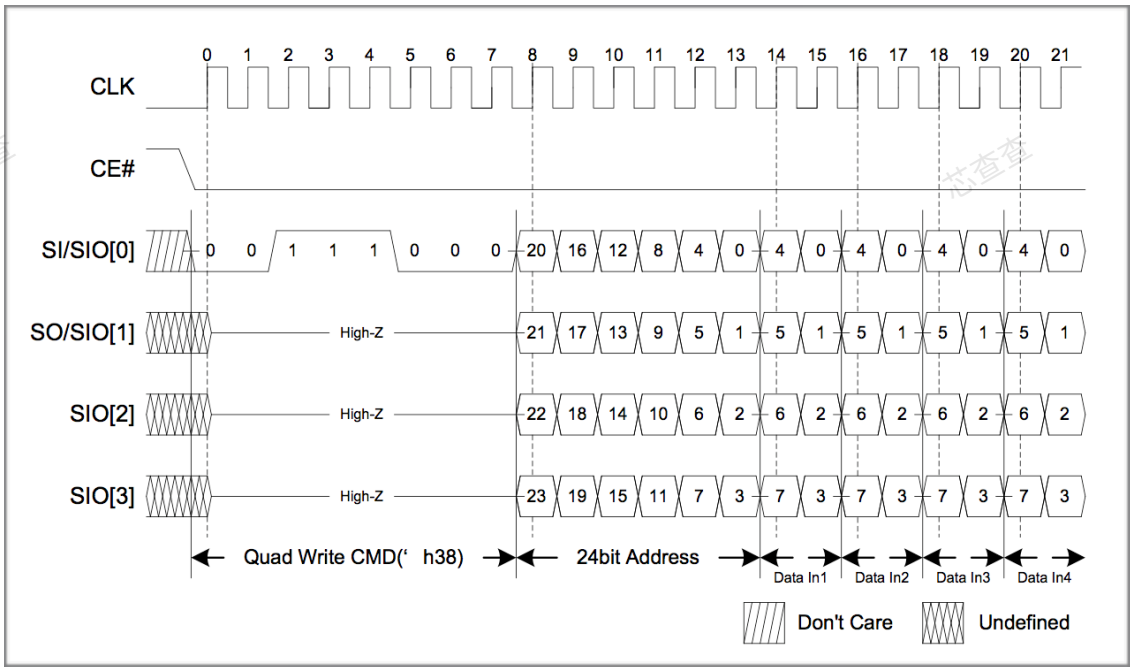

Figure 6-5. SPI Quad Write ‘h38

6.3. SPI Quad Mode Enable Operation

This command switches the device into quad I/O mode.

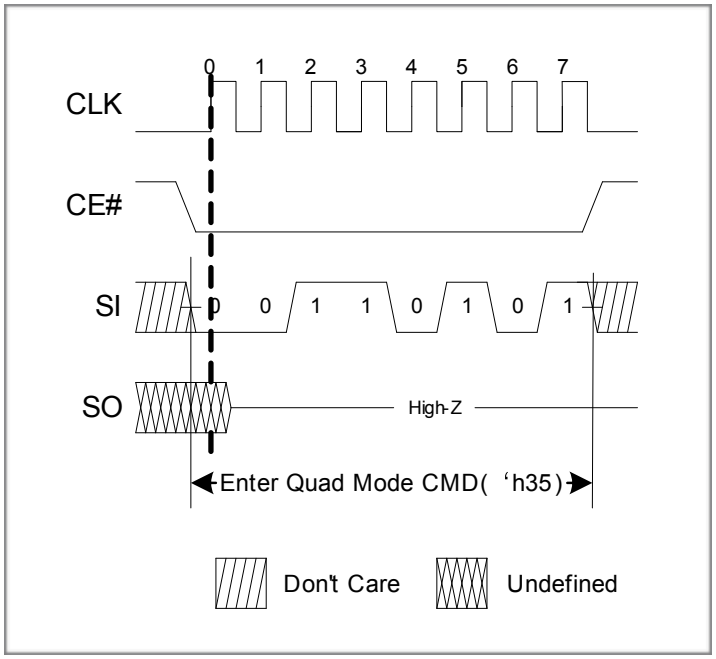

Figure 6-6. Quad Mode Enable ‘h35 (available only in SPI mode)

6.4. SPI Read ID Operation

This command is similar to Fast Read, but without the wait cycles and the device outputs EID value instead of data.

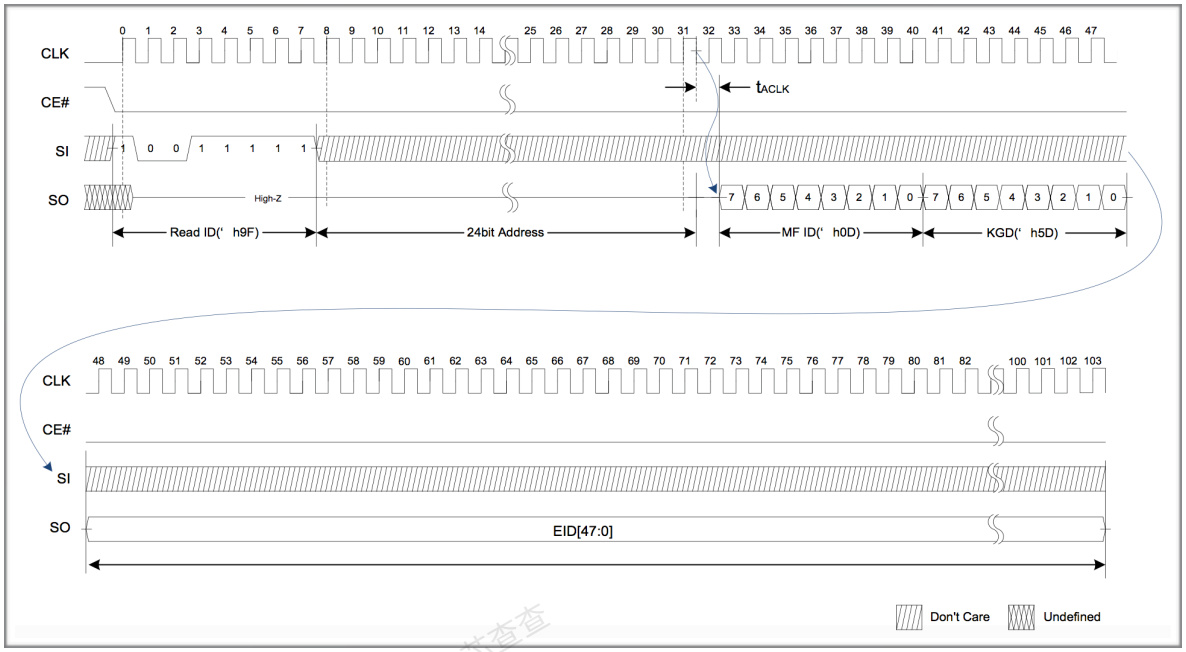

Figure 6-7. SPI Read ID 'h9F (Available Only in SPI Mode)

Table 6-1. Known Good Die (KGD)

KDG[7:0]	Known Good Die
'b0101_0101	Fail
'b0101_1101	Pass

📖 ***Note:***

Default is FAIL die, and only mark PASS after all tests passed.

7. QPI Mode Operations

7.1. QPI Read Operations

For all reads, data will be available t_{ACLK} after the falling edge of CLK.

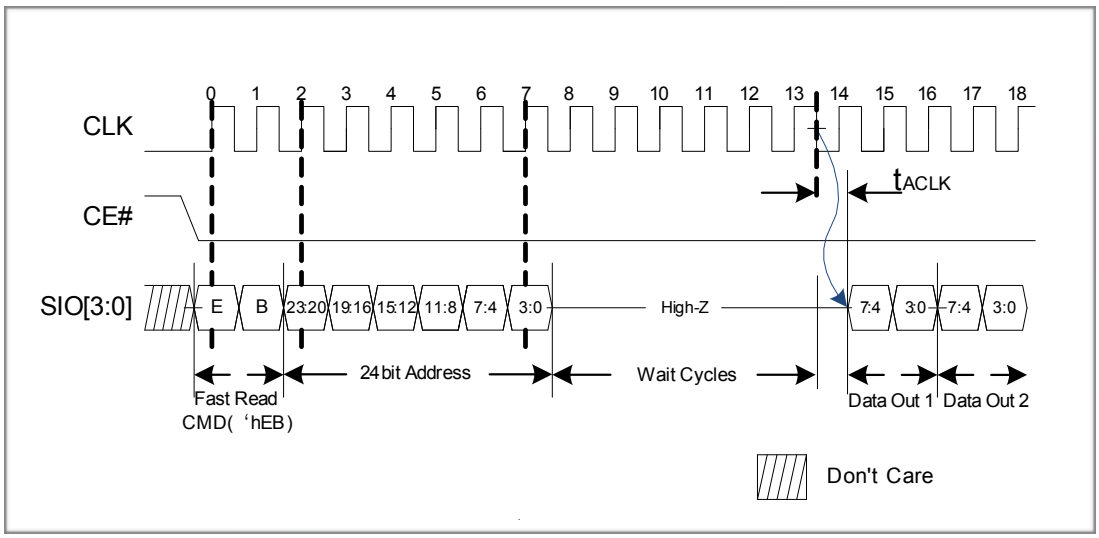

Figure 7-1. QPI Fast Read 'hEB
(Max frequency: 144 MHz for ESP-PSRAM64, 133 MHz for ESP-PSRAM64H)

7.2. QPI Write Operations

QPI write command can be input as 'h02 or 'h38.

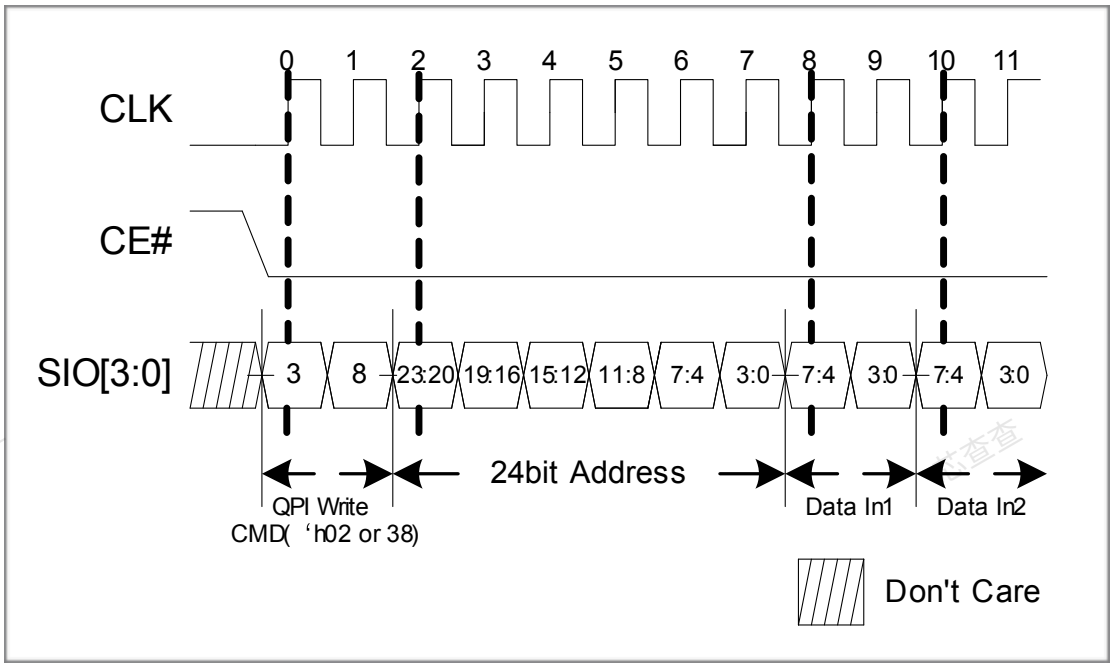

Figure 7-2. QPI Write 'h02 or 'h38

7.3. QPI Quad Mode Exit Operation

This command will switch the device back into serial I/O mode.

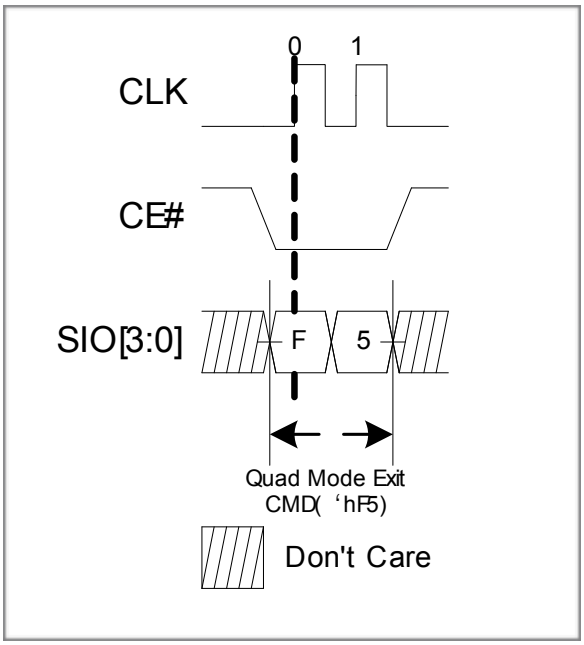

Figure 7-3. Quad Mode Exit 'hF5 (Only Available in QPI Mode)

8. Reset Operation

The reset operation is used as a system (software) reset that puts the device in SPI standby mode, which is also the default mode after power-up. This operation consists of two commands: Reset-Enable (RSTEN) and Reset (RST).

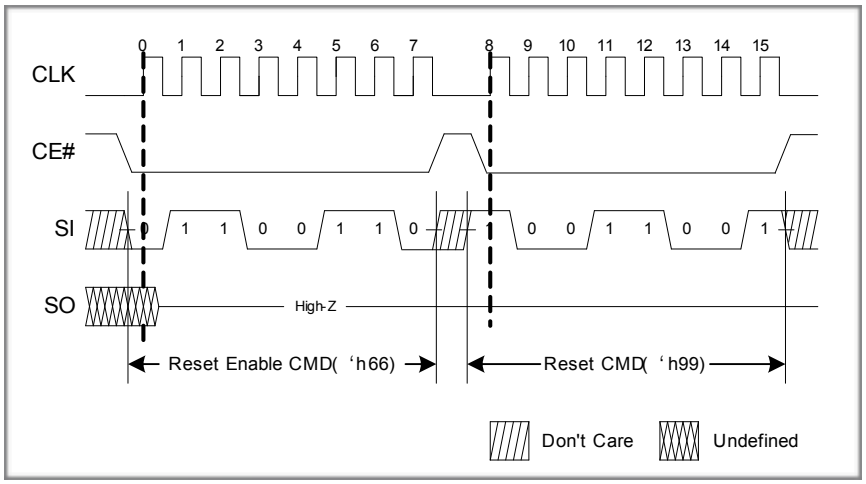

Figure 8-1. SPI Reset

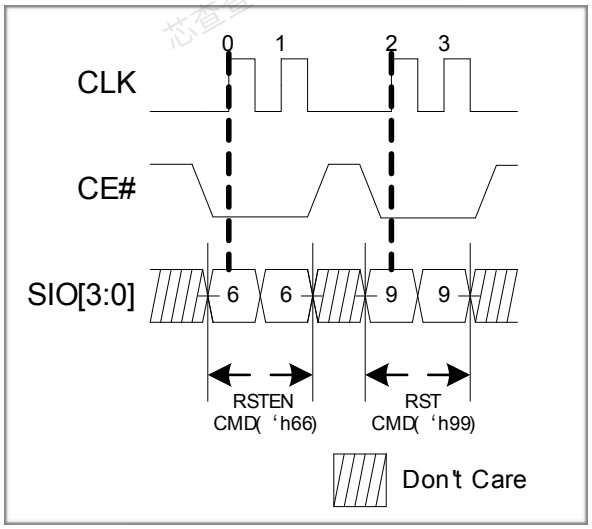

Figure 8-2. QPI Reset

Reset command has to immediately follow the Reset-Enable command in order for the reset operation to take effect. Any command other than the Reset command after the Reset-Enable command will cause the device to exit Reset-Enable state and abandon reset operation.

9. Input/Output Timing

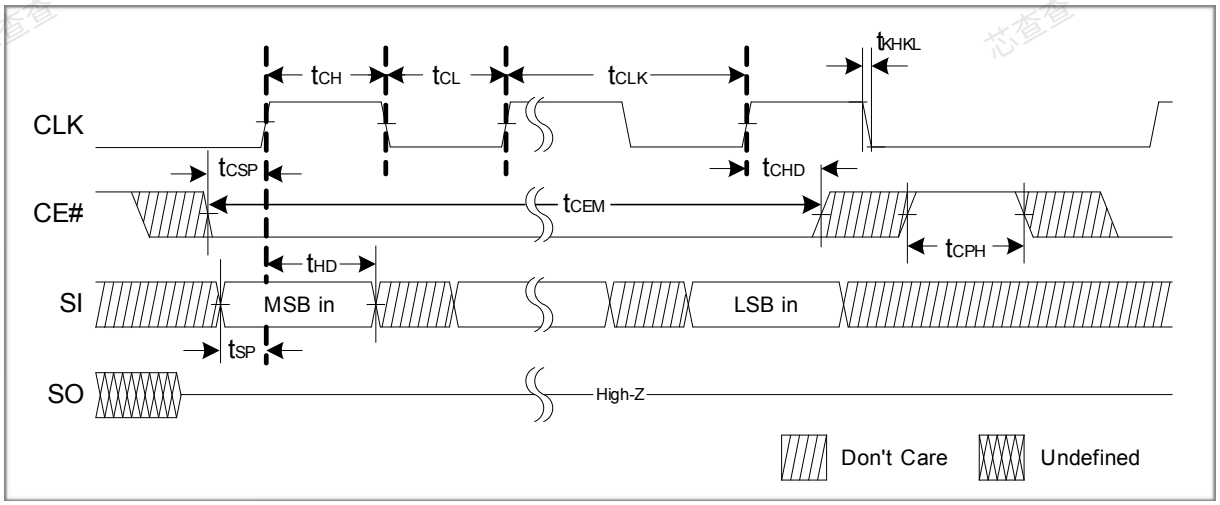

Figure 10-1. Input Timing

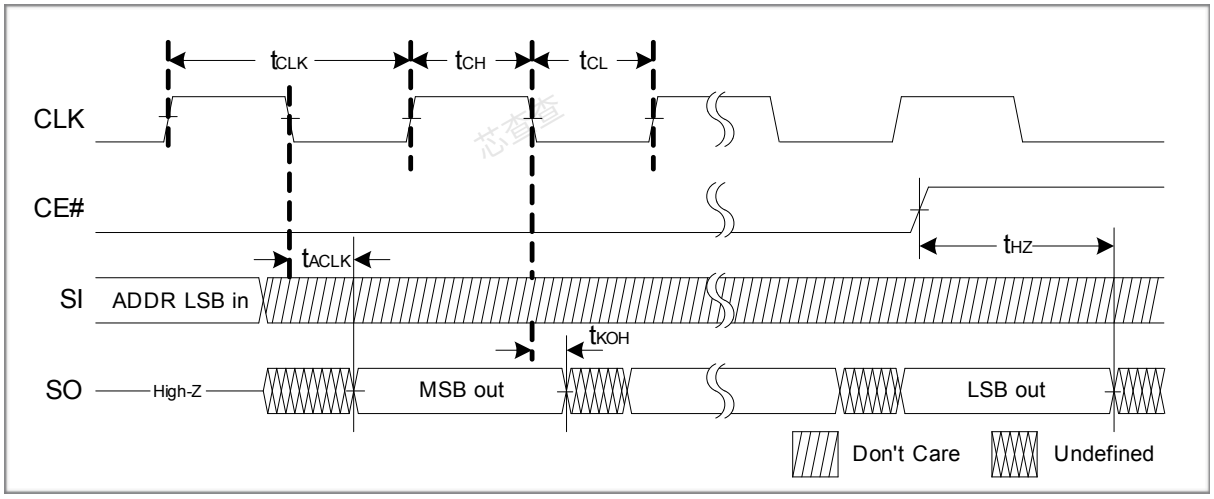

Figure 10-2. Output Timing

10. Electrical Specifications

10.1. Absolute Maximum Ratings

Table 10-1. Absolute Maximum Ratings

Symbol	Parameter	Rating	Unit
VT	Voltage to any pad except Vcc relative to Vss	–0.3 ~ Vcc +0.3	V
V_{cc}	Voltage on Vcc relative to Vss	ESP-PSRAM64: –0.2 ~ +2.45 ESP-PSRAM64H: –0.2 ~ +4.2	V
T_{STG}	Storage Temperature*	–55 ~ +150	°C

📖 ***Note:***

**Storage temperature refers to the case surface temperature on the center/top side of the PSRAM.*

⚠️ ***Notice:***

Exposing the device to stress greater than the listed absolute maximum ratings could cause permanent damage. The device is not meant to be operated under conditions outside the limits specified in this document. Exposure to Absolute Maximum Rating conditions for extended periods may affect device reliability.

10.2. Operating Conditions

Table 10-2. Operating Characteristics

Parameter	Min	Max	Unit
Operating Temperature	–40	85	°C

10.3. Pin Capacitance

Table 10-3. Package Pin Capacitance

Symbol	Parameter	Min	Max	Unit	Notes
C_{IN}	Input Pin Capacitance	-	6	pF	V_{IN} = 0V
C_{OUT}	Output Pin Capacitance	-	8	pF	V_{OUT} = 0V

10.4. DC Electrical Characteristics

Table 10-4. DC Characteristics

Symbol	Parameter	Min	Max	Unit
Vcc	Supply voltage	ESP-PSRAM64: 1.62 ESP-PSRAM64H: 2.7	ESP-PSRAM64: 1.98 ESP-PSRAM64H: 3.6	V
V_{IH}	Input high voltage	Vcc – 0.4	Vcc + 0.2	V
V_{IL}	Input low voltage	–0.2	0.4	V
V_{OH}	Output high voltage (I_{OH} = –0.2 mA)	0.8 Vcc	-	V
V_{OL}	Output low voltage (I_{OL} = +0.2 mA)	-	0.2 Vcc	V
I_{LI}	Input leakage current	-	1	μA
I_{LO}	Output leakage current	-	1	μA
I_{CC}	Read/Write	-	ESP-PSRAM64: 25 ESP-PSRAM64H: 40	mA
I_{SB}	Standby current*	-	200	μA

📖 ***Note:***

**Standby current is measured when CLK is in DC low state.*

10.5. AC Electrical Characteristics

Table 10-5. Read/Write Timing

Symbol	Parameter	Min	Max	Unit	Notes
t_{CLK}	CLK period—SPI Read ('h03)	30.3	-	ns	33 MHz
	CLK period—all other operations	7			144/133 MHz*
t_{CH}/t_{CL}	Clock high/low width	0.45	0.55	t_{CLK} (min)	-
t_{KHKL}	Clock rise or fall time	-	1.5	ns	-
t_{CPH}	CE# HIGH between subsequent burst operations	50	-	ns	-
t_{CEM}	CE# low pulse width	-	8	μs	-
t_{CSP}	CE# setup time to CLK rising edge	2.5	-	ns	-
t_{CHD}	CE# hold time from CLK rising edge	20	-		-
t_{SP}	Setup time to active CLK edge	2	-		-
t_{HD}	Hold time from active CLK edge	2	-		-

Symbol	Parameter	Min	Max	Unit	Notes
t_{HZ}	Chip disable to DQ output hight-Z	-	6		-
t_{ACLK}	CLK to output delay	2	6		-
t_{KOH}	Data hold time from clock falling edge	1.5	-		-

📖 ***Note*:***

1. *Only Linear Burst allows page boundary crossing. Frequency limits are therefore*
   - *144/133 MHz MAX. without crossing page boundary, and*
   - *84 MHz MAX. when burst commands cross page boundary.*
2. For ESP-PSRAM64, the maximum frequency is 144 MHz, while for ESP-PSRAM64H, it is 133 MHz.
3. *For operating frequencies > 84 MHz, refer to JEDEC JESD84-B50 for data sampling training.*

芯查查

11. Product Outline Dimension

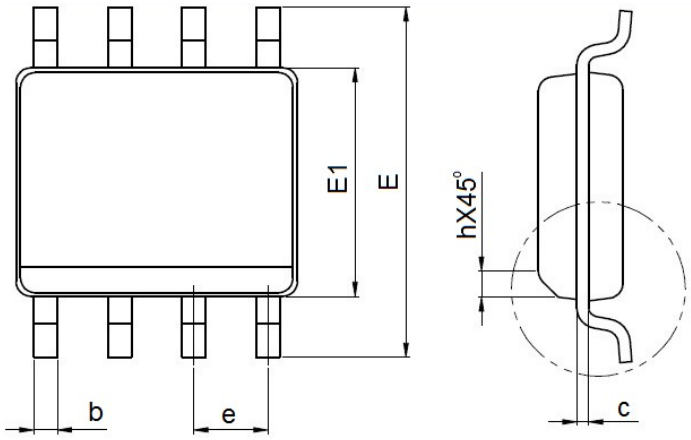

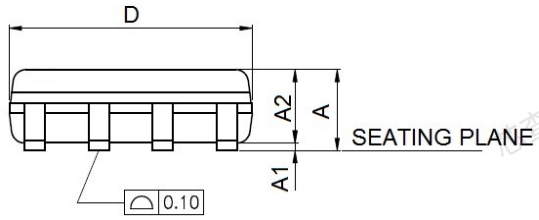

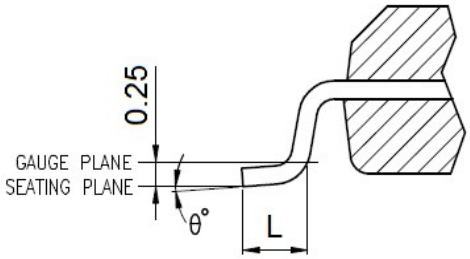

VARIATIONS (ALL DIMENSIONS SHOWN IN MM)

SYMBOLS	STANDARD	
	MIN.	MAX.
A	—	1.75
A1	0.10	0.25
A2	1.25	—
b	0.31	0.51
c	0.10	0.25
D	4.90 BSC	
E	6.00 BSC	
E1	3.90 BSC	
e	1.27 BSC	
L	0.40	1.27
h	0.25	0.50
θ°	0	8

NOTES:

1. JEDEC OUTLINE : MS-012 AA REV.F (STANDARD)
   MS-012 BA REV.F (THERMAL)
2. DIMENSIONS "D" DOES NOT INCLUDE MOLD FLASH, PROTRUSIONS OR GATE BURRS.MOLD FLASH, PROTRUSIONS AND GATE BURRS SHALL NOT EXCEED 0.15mm. PER SIDE.
3. DIMENSIONS "E1" DOES NOT INCLUDE INTER-LEAD FLASH, OR PROTRUSIONS. INTER-LEAD FLASH AND PROTRUSIONS SHALL NOT EXCEED 0.25mm PER SIDE.

A. Appendix–Device Marking Convention

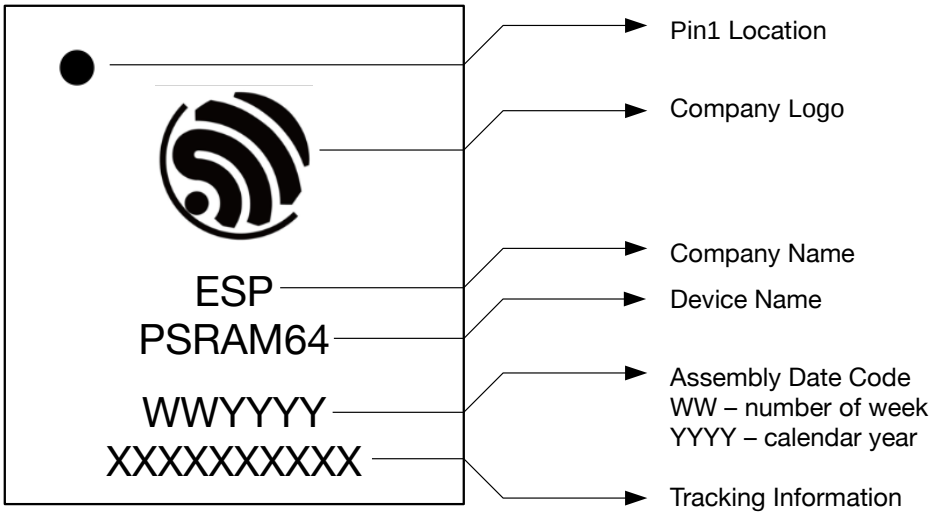

Figure A-1. Device Marking of ESP-PSRAM64

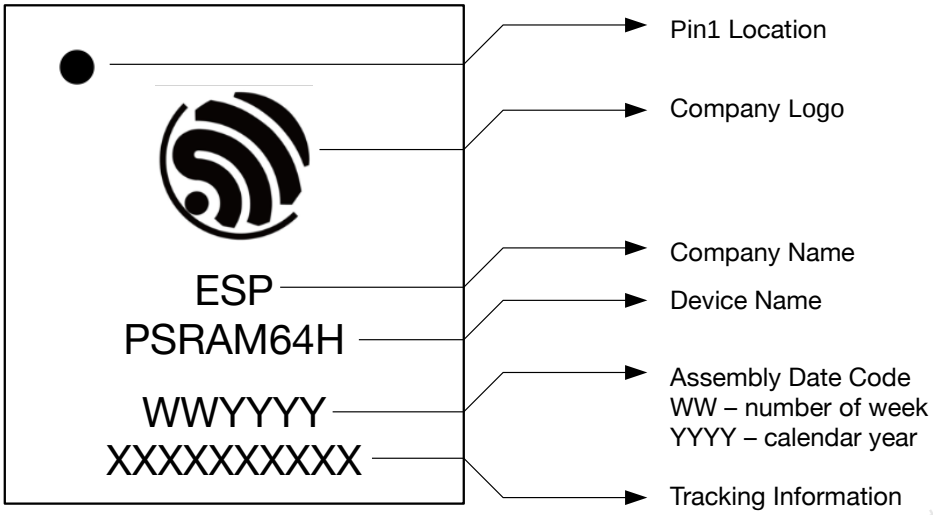

Figure A-2. Device Marking of ESP-PSRAM64H

📖 ***Note:***

The content and the number of digits of the Tracking Information are subject to change.

芯查查 芯查查 芯查查

Espressif IoT Team

www.espressif.com

Disclaimer and Copyright Notice

Information in this document, including URL references, is subject to change without notice.

THIS DOCUMENT IS PROVIDED AS IS WITH NO WARRANTIES WHATSOEVER, INCLUDING ANY WARRANTY OF MERCHANTABILITY, NON-INFRINGEMENT, FITNESS FOR ANY PARTICULAR PURPOSE, OR ANY WARRANTY OTHERWISE ARISING OUT OF ANY PROPOSAL, SPECIFICATION OR SAMPLE.

All liability, including liability for infringement of any proprietary rights, relating to the use of information in this document, is disclaimed. No licenses express or implied, by estoppel or otherwise, to any intellectual property rights are granted herein.

The Wi-Fi Alliance Member logo is a trademark of the Wi-Fi Alliance. The Bluetooth logo is a registered trademark of Bluetooth SIG.

All trade names, trademarks and registered trademarks mentioned in this document are property of their respective owners, and are hereby acknowledged.

Copyright © 2020 Espressif Inc. All rights reserved.