承　认　书
SPECIFICATION FOR APPROVAL

客　户 Customer：

产品名称 Project：　MMCX天线连接器

规格型号 Part No：　MMCX-KEF

贵公司承认印 Approval signatures

料 号/Part No.	签　章/Signatures

日期 Date:

拟制/Drawn	王宗华	
审核/Check	陈淼淼	
批准/Approved	张春华	

1.1 Specifications

型号 **Antennas Type**	MMCX-KEF
阻抗 **Impendence (Ω)**	50Ω
电压驻波比 **V.S.W.R**	直式软性电缆<1.15+0.02f（GHZ）
频率范围 **Frequenc Range(MHz)**	0~6GHz
工作电压 **DC Voltage（V）**	170Vmax
介质耐压 **Withstand Voltage(V)**	1000Vrms（海平面）
接触电阻 **Contact resistance()**	内导体≤5MΩ 外导体≤2.5MΩ
绝缘电阻 **Insulation resistance**	≥1000MΩ
插入损耗 **Insert Loss**	0.15dB(6GHz)
射频泄漏 **RF leakage**	-60dB/-90dB(软电缆/半刚电缆)@2-3GHz
耐用性 **Durability(mating)**	500 次
外壳 **shell**	HPb59-1(黄铜)镀金
插孔 **Jack**	锡磷青铜（镀金）
绝缘体 **insulator**	聚四氟乙烯
重量 **Weight(g)**	None
工作温度 **OperatingTemperature(℃)**	-65~+165（PE CABLE-40~+85）

1.2 Antenna Picture

上图型号： MMCX-KEF

（可定制）

*注： 因天线功能较为敏感，主体周边机构有变更请通知我们评估。

2. Electrical Specification

2.1 Test Equipment

A. VSWR and input impedance: Agilent 8753/E5071 Network Analyzer

B. Antenna gain and efficiency: ETS three-dimensional anechoic chamber

2.2 Test Setup

2.2.1 Frequency Range

2.2.2 VSWR

Step 1: The antenna is arranged on the customer provided test fixture.

Step 2: The VSWR of the antenna is measured via Agilent 8720/8753 Network Analyzer (see figure. 1).

Figure.1

2.2.3 Radiation pattern and Gain

A. The 3D chamber provides less than -40dB reflectivity from 800MHz to 6GHz and a 40cm diameter spherical quiet zone. The measurement results are calibrated using both dipoles and standard gain horns (see figure. 2).

B. The antenna under tested is arranged in the turned table and a decoupling sleeve is used to reduce feed line radiation (see figure. 3).

C. The measured results of the radiation patterns and antenna gain are obtained from the control system and showed on the monitor (see figure. 4 and 5).

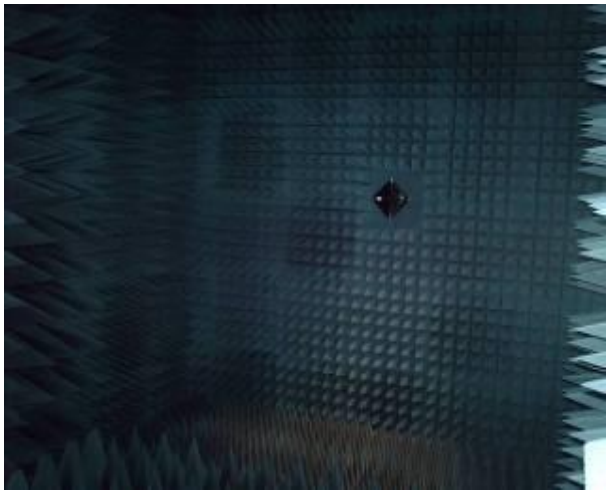

Figure.2

Figure.3

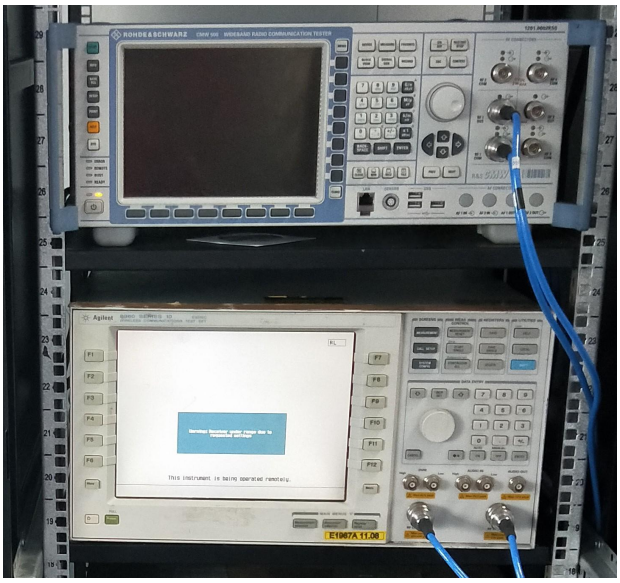

Figure.4

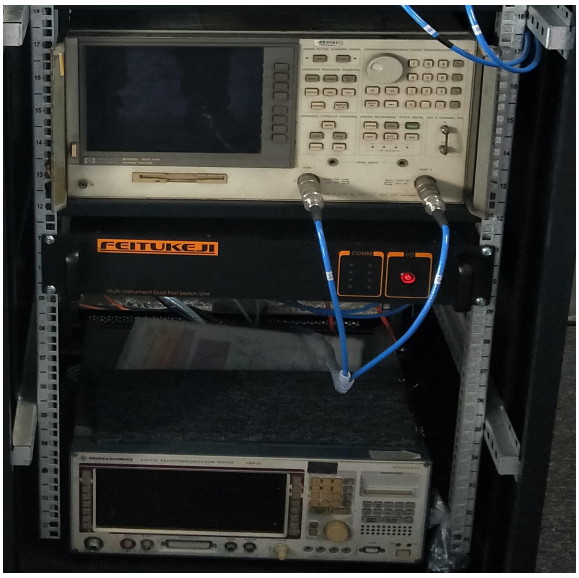

Figure.5

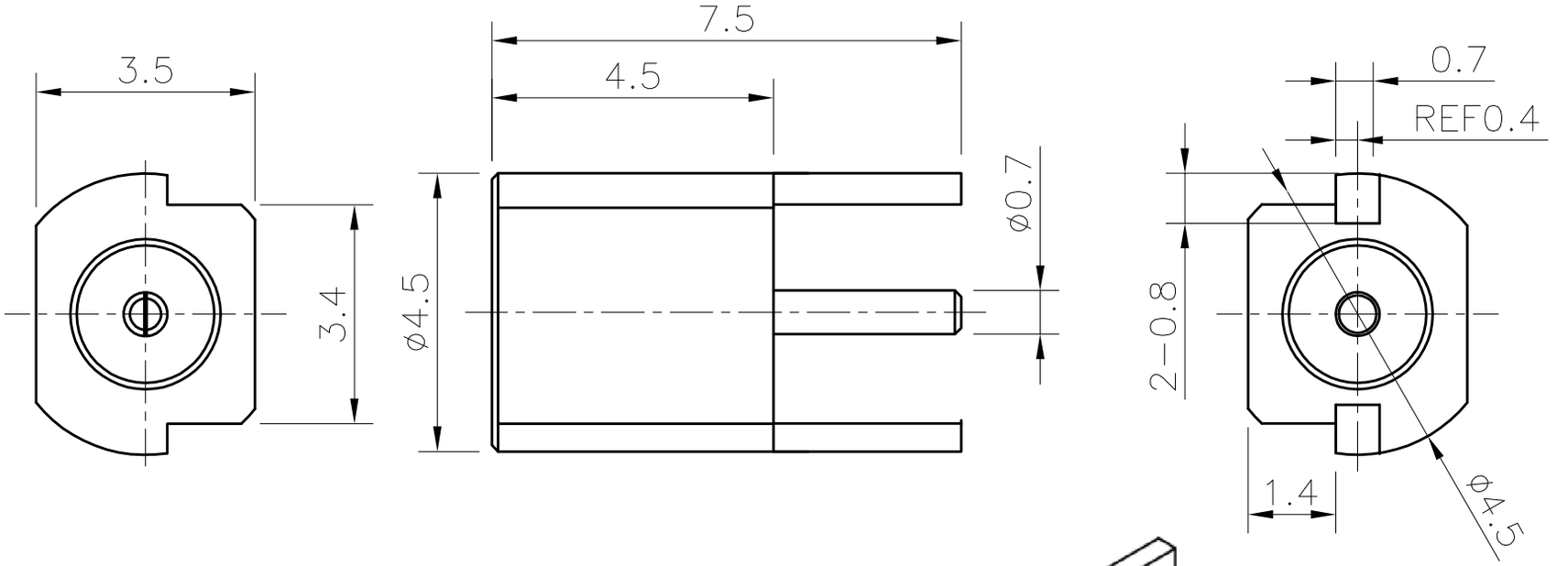

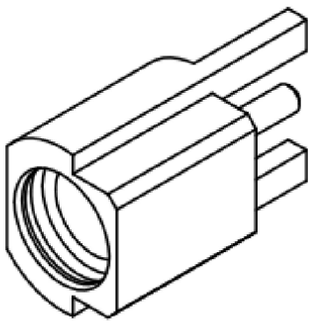

技术要求

1.温度范围：-55~+155℃
2.使用频率：0~6GHz
3.特性阻抗：50Ω
4.工作电压：170Vmax
5.接触电阻：内导体间<5mΩ，外导体间<2.5mΩ
6.绝缘电阻：>1000MΩ
7.机械耐久性：500次
8.满足RoHS2.0标准要求
9.适用技术标准：MIL-C-39012
10.产品满足48H盐雾试验

		new		2015/5/3		A	瀚源
ECN BO.		DESCRIPTION.		DATE.		REV.	
DESIGNED	CHECKED	APPROVAL	DRAWING NUMBER			SCALT: 1/2	SCALE: 3:1
Mikey	Tom	Jerry	PART NAME	MMCX-KEF	UNLESS OTHERWISE SPECIFIED,TOLERANCE:		X. ±0.25 X.x ±0.20 X.xx ±0.15 ANGULAIR ±3
			MODEL NAME	MMCX-KEF			
			3RD ANGLE PROJ	HanElectricity Co.,LTD			FILE.NO.