1 FEATURES

- Provides year, month, day, weekday, hours, minutes, and seconds based on a 32.768kHz quartz crystal
- Century flag
- Clock operating voltage: 1.2V to 5.5V at room temperature
- Low backup current; typical 0.5μA at V_{DD} = 3.0V and T_{amb}= 25°C
- 400kHz two-wire I^2C-bus interface (at V_{DD} = 1.8V to 5.5V)
- Programmable clock output for peripheral devices (32.768kHz, 1.024kHz, 32Hz, and 1Hz)
- Alarm and timer functions
- Integrated oscillator capacitor
- Internal Power-On Reset (POR)
- I^2C-bus slave address: read A3h and write A2h
- Open-drain interrupt pin

2 APPLICATIONS

- Mobile telephones Utility Meters
- Portable instruments
- Electronic metering
- Battery powered products

3 DESCRIPTION

The BM8563H is a CMOS Real-Time Clock (RTC) and calendar optimized for low power consumption. A programmable clock output, interrupt output, and voltage-low detector are also provided. All addresses and data are transferred serially via a two-line bidirectional I^2C-bus. Maximum bus speed is 400kbit/s. The register address is incremented automatically after each written or read data byte.

BM8563H Block Diagram

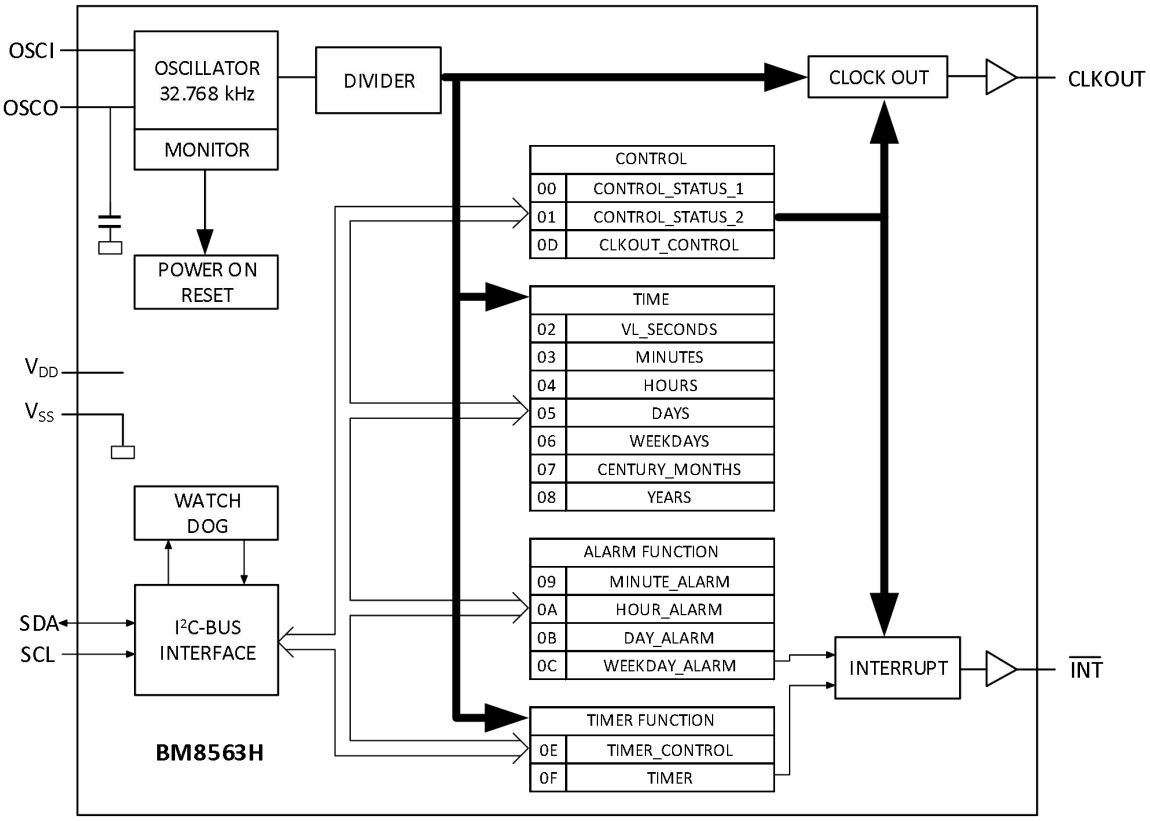

Copyright © GATEMODE Corp.

4 Pin Configuration and Functions

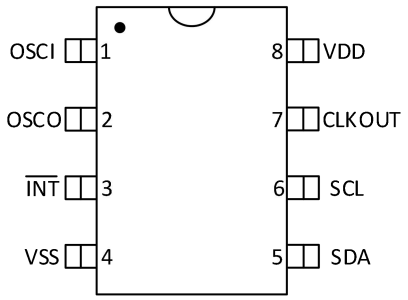

BM8563H

Pin Functions

PIN	Name	FUNCTION
1	OSCI	oscillator input
2	OSCO	oscillator output
3	$\overline{INT}$	interrupt output (open-drain; active LOW)
4	VSS	ground
5	SDA	serial data input and output
6	SCL	serial clock input
7	CLKOUT	clock output, open-drain
8	VDD	supply voltage

5 Specifications

5.1 Limiting values

Symbol	Parameter	Conditions	Min	Max	Unit
V_{DD}	supply voltage		-0.5	+6.5	V
I_{DD}	supply current		-50	+50	mA
V_I	input voltage	on pins SCL, SDA, and OSCI	-0.5	+6.5	V
V_O	Output voltage	on pins CLKOUT and $\overline{INT}$	-0.5	+6.5	V
I_I	input current	at any input	-10	+10	mA
I_O	output current	at any output	-10	+10	mA
P_{tot}	total power dissipation		-	300	mW
V_{ESD}	electrostatic discharge voltage	HBM [1]	-	±4000	V
		CDM [2]	-	±1000	V
I_{lu}	latch-up current	[3]	-	200	mA
T_{stg}	storage temperature		-55	125	°C
T_{amb}	ambient temperature	operating device	-40	+85	°C

[1] Pass level; Human Body Model (HBM), according to "JESD22-A114".

[2] Pass level; Charged-Device Model (CDM), according to "JESD22-C101".

[3] Pass level; latch-up testing according to "JESD78" at maximum ambient temperature ($T_{amb(max)}$).

Copyright © GATEMODE Corp.

5.2 Static Characteristics

(V_{DD} =1.8V to 5.5V; V_{SS} = 0V; T_{amb} = -40°C to +85°C; f_{osc} = 32.768kHz; quartz R_s = 40kΩ; C_L = 8pF; unless otherwise specified.)

SYMBOL	PARAMETER	CONDITIONS	MIN	TYP	MAX	UNITS
Supplies						
V_{DD}	supply voltage	interface inactive;f_{SCL} = 0Hz; T_{amb} = 25°C[1]	1.2	-	5.5	V
		interface active;f_{SCL} = 400kHz [1]	1.8	-	5.5	
		clock data integrity;T_{amb} = 25°C	1.2	-	5.5	
I_{DD}	supply current	interface active				
		f_{SCL} = 400kHz	-	-	800	μA
		f_{SCL} = 100kHz	-	-	200	μA
		interface inactive (f_{SCL} = 0 Hz); CLKOUT disabled; T_{amb} = 25°C [2]				
		V_{DD}=5.0V	-	700	1000	nA
		V_{DD}=3.0V	-	650	850	nA
		V_{DD}=2.0V	-	600	800	nA
		interface inactive (f_{SCL} = 0Hz); CLKOUT disabled; T_{amb} = -40°C to +85°C[2]				
		V_{DD}=5.0V	-	750	1100	nA
		V_{DD}=3.0V	-	600	950	nA
		V_{DD}=2.0V	-	650	900	nA
		interface inactive (f_{SCL} = 0Hz); CLKOUT enabled at 32kHz; T_{amb} = 25°C [2]				
		V_{DD}=5.0V	-	1000	1600	nA
		V_{DD}=3.0V	-	800	1000	nA
		V_{DD}=2.0V	-	700	800	nA
		interface inactive (f_{SCL} = 0Hz); CLKOUT enabled at 32kHz; T_{amb}= -40°C to +85°C [2]				
		V_{DD}=5.0V	-	1050	1700	nA
		V_{DD}=3.0V	-	850	1100	nA
		V_{DD}=2.0V	-	750	900	nA
Inputs						
V_{IL}	LOW-level input voltage		V_{SS}	-	0.3V_{DD}	V
V_{IH}	HIGH-level nput voltage		0.7V_{DD}	-	V_{DD}	V
I_{LI}	input leakage current		-1	0	+1	μA
C_I	Input capacitance	V_I = V_{DD} or V_{SS} [3]	-	-	7	pF
Outputs						
I_{OL}	LOW-level output current	output sink current; V_{OL} = 0.4V; V_{DD} = 5V				
		on pin SDA	3	-	-	mA
		on pin $\overline{INT}$	1	-	-	mA
		on pin CLKOUT	1	-	-	mA
I_{LO}	output leakage current	V_O = V_{DD} or V_{SS}	-1	0	+1	μA
Voltage detector						
V_{low}	low voltage	T_{amb} = 25°C; sets bit VL; see Figure 7	-	0.9	1.0	V

[1] For reliable oscillator start-up at power-up: $V_{DD(min)power\text{-}up}$ = $V_{DD(min)}$ + 0.3 V.

[2] Timer source clock = 1⁄60 Hz, level of pins SCL and SDA is V_{DD} or V_{SS}.

[3] Tested on sample basis.

Copyright © GATEMODE Corp.

5.3 Dynamic Characteristics

(V_{DD} =1.8V to 5.5V; V_{SS} = 0V; T_{amb} = -40°C to +85°C; f_{osc} = 32.768kHz; quartz R_s = 40kΩ; C_L = 8pF; unless otherwise specified.)

SYMBOL	PARAMETER	CONDITIONS	MIN	TYP	MAX	UNITS
Oscillator						
C_{OSCO}	capacitance on pin OSCO		10	20	30	pF
$\Delta f_{osc}/f_{osc}$	relative oscillator frequency variation	ΔV_{DD} = 200mV; T_{amb} = 25°C	-	0.2	-	ppm
Quartz crystal parameters (f = 32.768 kHz)						
R_s	series resistance		-	-	100	kΩ
C_L	load capacitance	Parallel[1]	7	-	12.5	pF
C_{trim}	trimmer capacitance	external;on pin OSCI	5	-	25	pF
CLKOUT output						
δ_{CLKOUT}	duty cycle on pin CLKOUT	[2]	-	50	-	%
I2C-bus timing characteristics (see Figure 1)[3][4]						
f_{SCL}	SCL clock frequency	[5]	-	-	400	kHz
t_{HD}; STA	hold time (repeated) START condition		0.6	-	-	µs
t_{SU}; STA	set-up time for a repeated START condition		0.6	-	-	µs
t_{LOW}	LOW period of the SCL clock		1.3	-	-	µs
t_{HIGH}	HIGH period of the SCL clock		0.6	-	-	µs
t_r	rise time of both SDA and SCL signals	standard-mode	-	-	1	µs
		fast-mode	-	-	0.3	µs
t_f	fall time of both SDA and SCL signals		-	-	0.3	µs
t_{BUF}	bus free time between a STOP and START condition		1.3	-	-	µs
C_b	capacitive load for each bus line		-	-	400	pF
t_{SU}; DAT	data set-up time		100	-	-	ns
t_{HD}; DAT	data hold time		0	-	-	ns
t_{SU}; STO	set-up time for STOP condition		0.6	-	-	µs
$t_{w(spike)}$	spike pulse width	on bus	-	-	50	ns

[1] C_L is a calculation of C_{trim} and C_{OSCO} in series: $C_L = \frac{(C_{trim} * C_{OSCO})}{(C_{trim} + C_{OSCO})}$.

[2] Unspecified for f_{CLKOUT} = 32.768 kHz.

[3] All timing values are valid within the operating supply voltage at ambient temperature and referenced to V_{IL} and V_{IH} with an input voltage swing of V_{SS} to V_{DD}.

[4] I^2C-bus access time between two STARTs or between a START and a STOP condition to this device must be less than one second.

Copyright © GATEMODE Corp.

5.4 Typical Characteristics

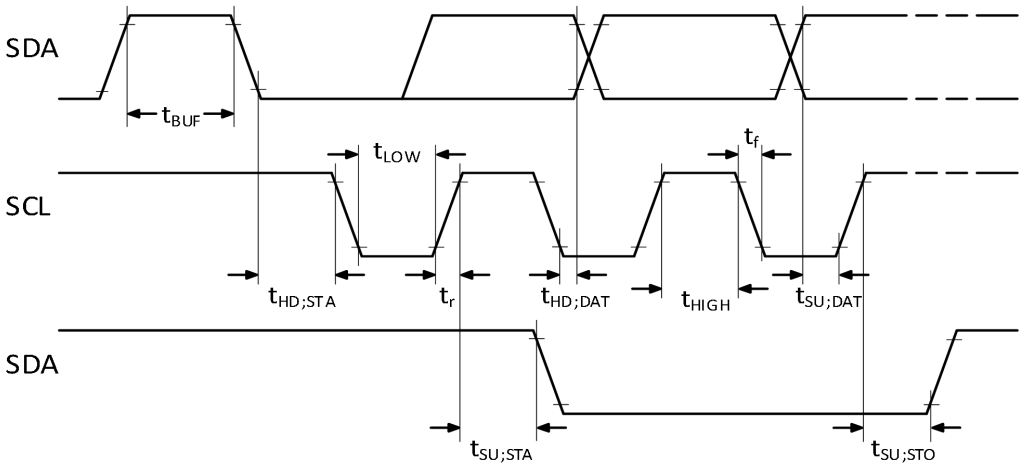

Fig 1. I²C-bus timing waveforms

6 Functional Description

The BM8563H contains sixteen 8-bit registers with an auto-incrementing register address, an on-chip 32.768 kHz oscillator with one integrated capacitor, a frequency divider which provides the source clock for the Real-Time Clock (RTC) and calendar, a programmable clock output, a timer, an alarm, a voltage-low detector, and a 400 kHz I²C-bus interface.

All 16 registers are designed as addressable 8-bit parallel registers although not all bits are implemented. The first two registers (memory address 00h and 01h) are used as control and/or status registers. The memory addresses 02h through 08h are used as counters for the clock function (seconds up to years counters). Address locations 09h through 0Ch contain alarm registers which define the conditions for an alarm. Address 0Dh controls the CLKOUT output frequency. 0Eh and 0Fh are the Timer control and Timer registers, respectively.

The Seconds, Minutes, Hours, Days, Months, Years as well as the Minute_alarm, Hour_alarm, and Day_alarm registers are all coded in Binary Coded Decimal (BCD) format.

When one of the RTC registers is written or read, the contents of all time counters are frozen. Therefore, faulty writing or reading of the clock and calendar during a carry condition is prevented.

6.1 CLKOUT output

A programmable square wave is available at the CLKOUT pin. Operation is controlled by the register CLKOUT control at address 0Dh. Frequencies of 32.768kHz (default), 1.024kHz, 32Hz, and 1Hz can be generated for use as a system clock, microcontroller clock, input to a charge pump, or for calibration of the oscillator. CLKOUT is an open drain output and enabled at power-on. If disabled it becomes high-impedance.

Copyright © GATEMODE Corp.

6.2 Register organization

Table 1. Formatted registers overview

Bit positions labelled as x are not relevant. Bit positions labelled with N should always be written with logic 0; if read they could be either logic 0 or logic 1. After reset, all registers are set according to Table 24.

Address	Register name	Bit							
		7	6	5	4	3	2	1	0
Control and status registers									
00h	Control_status_1	TEST1	N	STOP	N	TESTC	N	N	N
01h	Control_status_2	N	N	N	TI_TP	AF	TF	AIE	TIE
Time and date registers									
02h	VL_seconds	VL	SECONDS (0 to 59)						
03h	Minutes	x	MINUTES (0 to 59)						
04h	Hours	x	x	HOURS (0 to 23)					
05h	Days	x	x	DAYS (1 to 31)					
06h	Weekdays	x	x	x	x	x	WEEKDAYS (0 to 6)		
07h	Century_months	C	x	x	MONTHS (1 to 12)				
08h	Years	YEARS (0 to 99)							
Alarm registers									
09h	Minute_alarm	AE_M	MINUTE_ALARM (0 to 59)						
0Ah	Hour_alarm	AE_H	x	HOUR_ALARM (0 to 23)					
0Bh	Day_alarm	AE_D	x	DAY_ALARM (1 to 31)					
0Ch	Weekday_alarm	AE_W	x	x	x	x	WEEKDAY_ALARM (0 to 6)		
CLKOUT control register									
0Dh	CLKOUT_control	FE	x	x	x	x	x	FD[1:0]	
Timer registers									
0Eh	Timer_control	TE	x	x	x	x	x	TD[1:0]	
0Fh	Timer	TIMER[7:0]							

6.3 Control registers

6.3.1 Register Control_status_1

Table 2. Control_status_1 - control and status register 1 (address 00h) bit description

Bit	Symbol	Value	Description	Reference
7	TEST1	0[1]	normal mode must be set to logic 0 during normal operations	Section 6.9
		1	EXT_CLK test mode	
6	N	0[2]	unused	
5	STOP	0[1]	RTC source clock runs	Section 6.10
		1	all RTC divider chain flip-flops are asynchronously set to logic 0; the RTC clock is stopped (CLKOUT at 32.768 kHz is still available)	
4	N	0[2]	unused	
3	TESTC	0	Power-On Reset (POR) override facility is disabled; set to logic 0 for normal operation	Section 6.11.1
		1[1]	Power-On Reset (POR) override may be enabled	
2 to 0	N	000[2]	unused	

[1] Default value.
[2] Bits labeled as N should always be written with logic 0.

Copyright © GATEMODE Corp.

6.3.2 Register Control_status_2

Table 3. Control_status_2 - control and status register 2 (address 01h) bit description

Bit	Symbol	Value	Description	Reference
7 to 5	N	000[1]	unused	
4	TI_TP	0[2]	$\overline{\text{INT}}$ is active when TF is active (subject to the status of TIE)	Section 6.3.2.1 And Section 6.8
		1	$\overline{\text{INT}}$ pulses active according to Table 4 (subject to the status of TIE); **Remark:** note that if AF and AIE are active then $\overline{\text{INT}}$ will be permanently active	
3	AF	0[2]	read: alarm flag inactive	Section 6.3.2.1
			write: alarm flag is cleared	
		1	read: alarm flag active	
			write: alarm flag remains unchanged	
2	TF	0[2]	read: timer flag inactive	
			write: timer flag is cleared	
		1	read: timer flag active	
			write: timer flag remains unchanged	
1	AIE	0[2]	alarm interrupt disabled	
		1	alarm interrupt enabled	
0	TIE	0[2]	timer interrupt disabled	
		1	timer interrupt enabled	

[1] Bits labeled as N should always be written with logic 0.
[2] Default value.

6.3.2.1 Interrupt output

Bits TF and AF: When an alarm occurs, AF is set to logic 1. Similarly, at the end of a timer countdown, TF is set to logic 1. These bits maintain their value until overwritten using the interface. If both timer and alarm interrupts are required in the application, the source of the interrupt can be determined by reading these bits. To prevent one flag being overwritten while clearing another, a logic AND is performed during a write access.

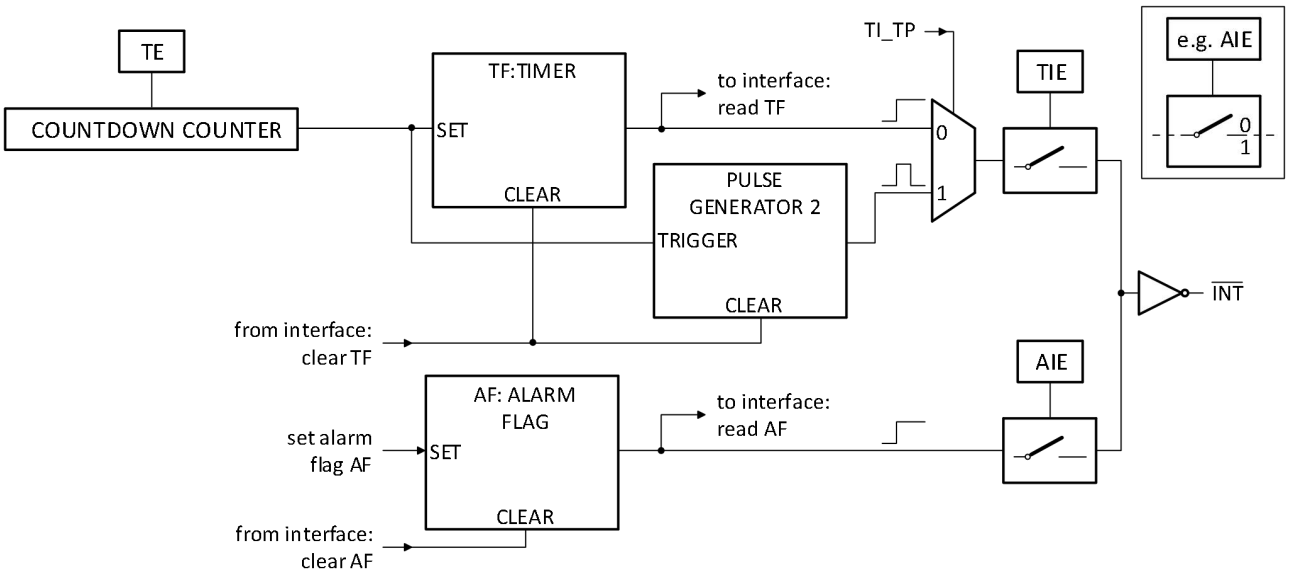

When bits TIE and AIE are disabled, pin INT will remain high-impedance.

Fig 6. Interrupt scheme

Copyright © GATEMODE Corp.

Bits TIE and AIE: These bits activate or deactivate the generation of an interrupt when TF or AF is asserted, respectively. The interrupt is the logical OR of these two conditions when both AIE and TIE are set.
Countdown timer interrupts: The pulse generator for the countdown timer interrupt uses an internal clock and is dependent on the selected source clock for the countdown timer and on the countdown value n. As a consequence, the width of the interrupt pulse varies (see Table 4).

Table 4. $\overline{\text{INT}}$ operation (bit TI_TP = 1)[1]

Source clock (Hz)	$\overline{\text{INT}}$ period (s)	
	n=1[2]	n>1[2]
4096	1/8192	1/4096
64	1/128	1/64
1	1/64	1/64
1/60	1/64	1/64

[1] TF and INT become active simultaneously. Default value.
[2] n = loaded countdown value. Timer stops when n = 0.

6.4 Time and date registers

The majority of the registers are coded in the BCD format to simplify application use.

6.4.1 Register VL_seconds

Table 5. VL_seconds - seconds and clock integrity status register (address 02h) bit description

Bit	Symbol	Value	Place value	Description
7	VL	0	-	clock integrity is guaranteed
		1[1]	-	integrity of the clock information is not guaranteed
6 to 4	SECONDS	0 to 5	ten's place	actual seconds coded in BCD format, see Table 6
3 to 0		0 to 9	unit place	

[1] Start-up value.

Table 6. Seconds coded in BCD format

Seconds value (decimal)	Upper-digit (ten's place)			Digit (unit place)			
	Bit 6	Bit 5	Bit 4	Bit 3	Bit 2	Bit 1	Bit 0
00	0	0	0	0	0	0	0
01	0	0	0	0	0	0	1
02	0	0	0	0	0	1	0
:	:	:	:	:	:	:	:
09	0	0	0	1	0	0	1
10	0	0	1	0	0	0	0
:	:	:	:	:	:	:	:
58	1	0	1	1	0	0	0
59	1	0	1	1	0	0	1

Copyright © GATEMODE Corp.

6.4.1.1 Voltage-low detector and clock monitor

The BM8563H has an on-chip voltage-low detector (see Figure 7). When V_{DD} drops below V_{low}, bit VL in the VL_seconds register is set to indicate that the integrity of the clock information is no longer guaranteed. The VL flag can only be cleared by using the interface.

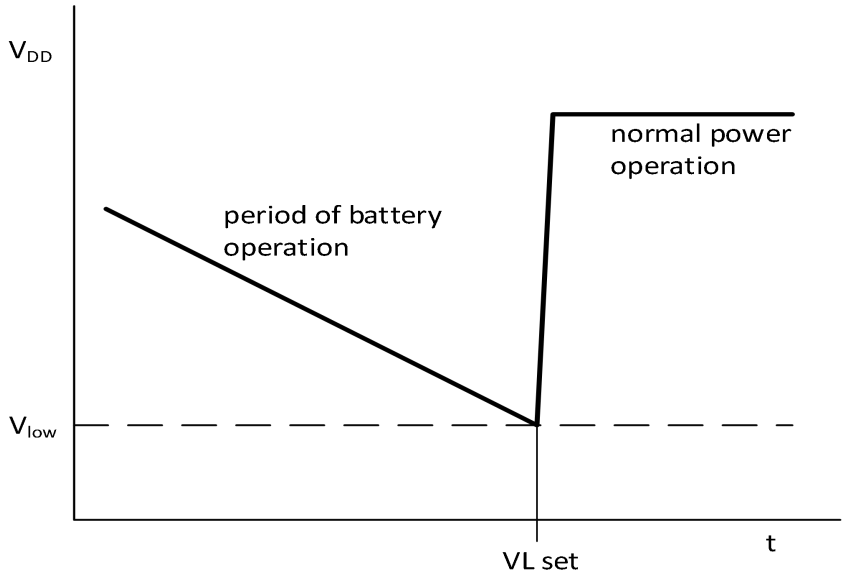

Fig 7. Voltage-low detection

The VL flag is intended to detect the situation when V_{DD} is decreasing slowly, for example under battery operation. Should the oscillator stop or V_{DD} reach V_{low} before power is re-asserted, then the VL flag is set. This will indicate that the time may be corrupted.

6.4.2 Register Minutes

Table 7. Minutes - minutes register (address 03h) bit description

Bit	Symbol	Value	Place value	Description
7	-	-	-	unused
6 to 4	MINUTES	0 to 5	ten's place	actual minutes coded in BCD format
3 to 0		0 to 9	unit place	

6.4.3 Register Hours

Table 8. Hours - hours register (address 04h) bit description

Bit	Symbol	Value	Place value	Description
7 to 6	-	-	-	unused
5 to 4	HOURS	0 to 2	ten's place	actual hours coded in BCD format
3 to 0		0 to 9	unit place	

6.4.4 Register Days

Table 9. Days - days register (address 05h) bit description

Bit	Symbol	Value	Place value	Description
7 to 6	-	-	-	unused
5 to 4	DAYS[1]	0 to 3	ten's place	actual day coded in BCD format
3 to 0		0 to 9	unit place	

[1] The BM8563H compensates for leap years by adding a 29th day to February if the year counter contains a value which is exactly divisible by 4, including the year 00.

Copyright © GATEMODE Corp.

6.4.5 Register Weekdays

Table 10. Weekdays - weekdays register (address 06h) bit description

Bit	Symbol	Value	Description
7 to 3	-	-	unused
2 to 0	WEEKDAYS	0 to 6	actual weekday values, see Table 11

Table 11. Weekday assignments

Day[1]	Bit		
	2	1	0
Sunday	0	0	0
Monday	0	0	1
Tuesday	0	1	0
Wednesday	0	1	1
Thursday	1	0	0
Friday	1	0	1
Saturday	1	1	0

[1] Definition may be re-assigned by the user.

6.4.6 Register Century_months

Table 12. Century_months - century flag and months register (address 07h) bit description

Bit	Symbol	Value	Place value	Description
7	C[1]	0[2]	-	indicates the century is x
		1	-	indicates the century is x + 1
6 to 5	-	-	-	unused
4	MONTHS	0 to 1	ten's place	actual month coded in BCD format, see Table 13
3 to 0		0 to 9	unit place	

[1] This bit may be re-assigned by the user.
[2] This bit is toggled when the register Years overflows from 99 to 00.

Table 13. Month assignments in BCD format

Month	Upper-digit (ten's place)	Digit (unit place)			
	Bit 4	Bit 3	Bit 2	Bit 1	Bit 0
January	0	0	0	0	1
February	0	0	0	1	0
March	0	0	0	1	1
April	0	0	1	0	0
May	0	0	1	0	1
June	0	0	1	1	0
July	0	0	1	1	1
August	0	1	0	0	0
September	0	1	0	0	1
October	1	0	0	0	0
November	1	0	0	0	1
December	1	0	0	1	0

Copyright © GATEMODE Corp.

6.4.7 Register Years

Table 14. Years - years register (08h) bit description

Bit	Symbol	Value	Place value	Description
7 to 4	YEARS	0 to 9	ten's place	actual year coded in BCD format[1]
3 to 0		0 to 9	unit place	

[1] When the register Years overflows from 99 to 00, the century bit C in the register Century_months is toggled.

6.5 Setting and reading the time

Figure 8 shows the data flow and data dependencies starting from the 1Hz clock tick.

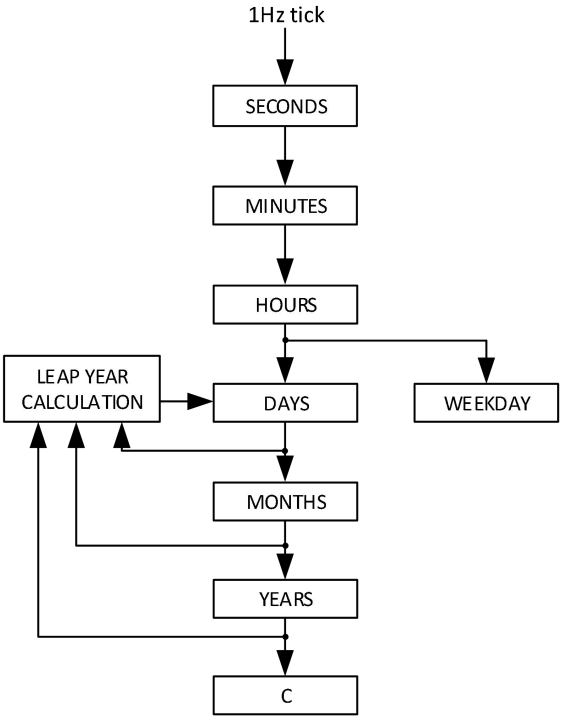

Fig 8. Data flow for the time function

During read/write operations, the time counting circuits (memory locations 02h through 08h) are blocked. This prevents

- Faulty reading of the clock and calendar during a carry condition
- Incrementing the time registers, during the read cycle

After this read/write access is completed, the time circuit is released again and any pending request to increment the time counters that occurred during the read access is serviced. A maximum of 1 request can be stored; therefore, all accesses must be completed within 1 second (see Figure 9).

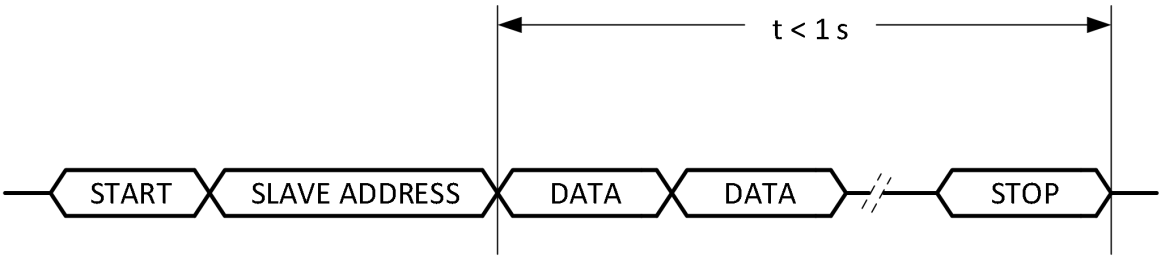

Fig 9. Access time for read/write operations

Copyright © GATEMODE Corp.

As a consequence of this method, it is very important to make a read or write access in one go, that is, setting or reading seconds through to years should be made in one single access. Failing to comply with this method could result in the time becoming corrupted.
As an example, if the time (seconds through to hours) is set in one access and then in a second access the date is set, it is possible that the time may increment between the two accesses. A similar problem exists when reading. A roll over may occur between reads thus giving the minutes from one moment and the hours from the next.
Recommended method for reading the time:

1. Send a START condition and the slave address for write (A2h).
2. Set the address pointer to 2 (VL_seconds) by sending 02h.
3. Send a RESTART condition or STOP followed by START.
4. Send the slave address for read (A3h).
5. Read VL_seconds.
6. Read Minutes.
7. Read Hours.
8. Read Days.
9. Read Weekdays.
10. Read Century_months.
11. Read Years.
12. Send a STOP condition.

6.6 Alarm registers

6.6.1 Register Minute_alarm

Table 15. Minute_alarm - minute alarm register (address 09h) bit description

Bit	Symbol	Value	Place value	Description
7	AE_M	0	-	minute alarm is enabled
		1[1]	-	minute alarm is disabled
6 to 4	MINUTE_ALARM	0 to 5	ten's place	minute alarm information coded in BCD format
3 to 0		0 to 9	unit place	

[1] Default value.

6.6.2 Register Hour_alarm

Table 16. Hour_alarm - hour alarm register (address 0Ah) bit description

Bit	Symbol	Value	Place value	Description
7	AE_H	0	-	hour alarm is enabled
		1[1]	-	hour alarm is disabled
6	-	-	-	unused
5 to 4	HOUR_ALARM	0 to 2	ten's place	hour alarm information coded in BCD format
3 to 0		0 to 9	unit place	

[1] Default value.

6.6.3 Register Day_alarm

Table 17. Day_alarm - day alarm register (address 0Bh) bit description

Bit	Symbol	Value	Place value	Description
7	AE_D	0	-	day alarm is enabled
		1[1]	-	day alarm is disabled
6	-	-	-	unused
5 to 4	DAY_ALARM	0 to 3	ten's place	day alarm information coded in BCD format
3 to 0		0 to 9	unit place	

[1] Default value.

Copyright © GATEMODE Corp.

6.6.4 Register Weekday_alarm

Table 18. Weekday_alarm - weekday alarm register (address 0Ch) bit description

Bit	Symbol	Value	Description
7	AE_W	0	weekday alarm is enabled
		1[1]	weekday alarm is disabled
6 to 3	-	-	unused
2 to 0	WEEKDAY_ALARM	0 to 6	weekday alarm information

[1] Default value.

6.6.5 Alarm flag

By clearing the alarm enable bit (AE_x) of one or more of the alarm registers, the corresponding alarm condition(s) are active. When an alarm occurs, AF is set to logic 1. The asserted AF can be used to generate an interrupt ($\overline{INT}$). The AF is cleared using the interface.

The registers at addresses 09h through 0Ch contain alarm information. When one or more of these registers is loaded with minute, hour, day or weekday, and its corresponding AE_x is logic 0, then that information is compared with the current minute, hour, day, and weekday. When all enabled comparisons first match, the alarm flag (AF in register Control_2) is set to logic 1.

The generation of interrupts from the alarm function is controlled via bit AIE. If bit AIE is enabled, the $\overline{INT}$ pin follows the condition of bit AF. AF will remain set until cleared by the interface. Once AF has been cleared, it will only be set again when the time increments to match the alarm condition once more. Alarm registers which have their AE_x bit at logic 1 are ignored.

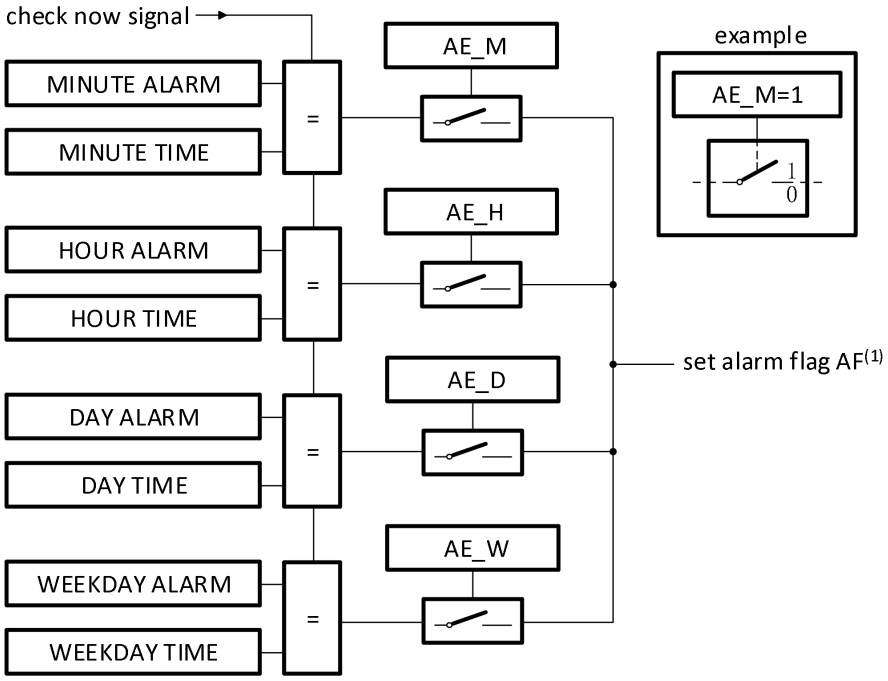

(1) Only when all enabled alarm settings are matching.
It's only on increment to a matched case that the alarm flag is set, see Section 6.6.5.

Fig 10. Alarm function block diagram

Copyright © GATEMODE Corp.

6.7 Register CLKOUT_control and clock output

Frequencies of 32.768kHz (default), 1.024kHz, 32Hz, and 1Hz can be generated for use as a system clock, microcontroller clock, input to a charge pump, or for calibration of the oscillator.

Table 19. CLKOUT_control - CLKOUT control register (address 0Dh) bit description

Bit	Symbol	Value	Description
7	FE	0	the CLKOUT output is inhibited and CLKOUT output is set high-impedance
		1[1]	the CLKOUT output is activated
6 to 2	-	-	unused
1 to 0	FD[1:0]		frequency output atpin CLKOUT
		00[1]	32.768 kHz
		01	1.024 kHz
		10	32 Hz
		11	1 Hz

[1] Default value.

6.8 Timer function

The 8-bit countdown timer at address 0Fh is controlled by the Timer_control register at address 0Eh. The Timer_control register determines one of 4 source clock frequencies for the timer (4096 Hz, 64 Hz, 1 Hz, or 1/60 Hz), and enables or disables the timer. The timer counts down from a software-loaded 8-bit binary value. At the end of every countdown, the timer sets the timer flag TF. The TF may only be cleared by using the interface. The asserted TF can be used to generate an interrupt on pin $\overline{INT}$. The interrupt may be generated as a pulsed signal every countdown period or as a permanently active signal which follows the state of TF. Bit TI_TP is used to control this mode selection. When reading the timer, the current countdown value is returned.

6.8.1 Register Timer_control

Table 20. Timer_control - timer control register (address 0Eh) bit description

Bit	Symbol	Value	Description
7	TE	0[1]	timer is disabled
		1	timer is enabled
6 to 2	-	-	unused
1 to 0	TD[1:0]		timer source clock frequency select[2]
		00	4.096kHz
		01	64Hz
		10	1Hz
		11[2]	1/60Hz

[1] Default value.

[2] These bits determine the source clock for the countdown timer; when not in use, TD[1:0] should be set to 1⁄60 Hz for power saving.

Copyright © GATEMODE Corp.

6.8.2 Register Timer

Table 21. Timer - timer value register (address 0Fh) bit description

Bit	Symbol	Value	Description
7 to 0	TIMER[7:0]	00h to FFh	countdown period in seconds: $CountdownPeriod = \frac{n}{Source\ ClockFrequency}$ where n is the countdown value

Table 22. Timer register bits value range

Bit							
7	6	5	4	3	2	1	0
128	64	32	16	8	4	2	1

The register Timer is an 8-bit binary countdown timer. It is enabled and disabled via the Timer_control register bit TE. The source clock for the timer is also selected by the Timer_control register. Other timer properties such as interrupt generation are controlled via the register Control_status_2.
For accurate read back of the countdown value, it is recommended to read the register twice and check for consistent results, since it is not possible to freeze the countdown timer counter during read back.

6.9 EXT_CLK test mode

A test mode is available which allows for on-board testing. In such a mode it is possible to set up test conditions and control the operation of the RTC.

The test mode is entered by setting bit TEST1 in register Control_status_1. Then pin CLKOUT becomes an input. The test mode replaces the internal 64 Hz signal with the signal applied to pin CLKOUT. Every 64 positive edges applied to pin CLKOUT will then generate an increment of one second.
The signal applied to pin CLKOUT should have a minimum pulse width of 300 ns and a maximum period of 1000 ns.
The internal 64 Hz clock, now sourced from CLKOUT, is divided down to 1 Hz by a 2^6 divide chain called a prescaler. The prescaler can be set into a known state by using bit STOP. When bit STOP is set, the prescaler is reset to 0 (STOP must be cleared before the prescaler can operate again).

From a STOP condition, the first 1 second increment will take place after 32 positive edges on CLKOUT. Thereafter, every 64 positive edges will cause a one-second increment.

Remark: Entry into EXT_CLK test mode is not synchronized to the internal 64 Hz clock. When entering the test mode, no assumption as to the state of the prescaler can be made.

6.9.1 Operation example:

1. Set EXT_CLK test mode (Control_status_1, bit TEST1 = 1).
2. Set STOP (Control_status_1, bit STOP = 1).
3. Clear STOP (Control_status_1, bit STOP = 0).
4. Set time registers to desired value.
5. Apply 32 clock pulses to CLKOUT.
6. Read time registers to see the first change.
7. Apply 64 clock pulses to CLKOUT.
8. Read time registers to see the second change.

Repeat steps 7 and 8 for additional increments.

Copyright © GATEMODE Corp.

6.10 STOP bit function

The function of the STOP bit is to allow for accurate starting of the time circuits. The STOP bit function will cause the upper part of the prescaler (F_2 to F_{14}) to beheld in reset and thus no 1 Hz ticks will be generated (see Figure 11). The time circuits can then be set and will not increment until the STOP bit is released (see Figure 12 and Table 23).

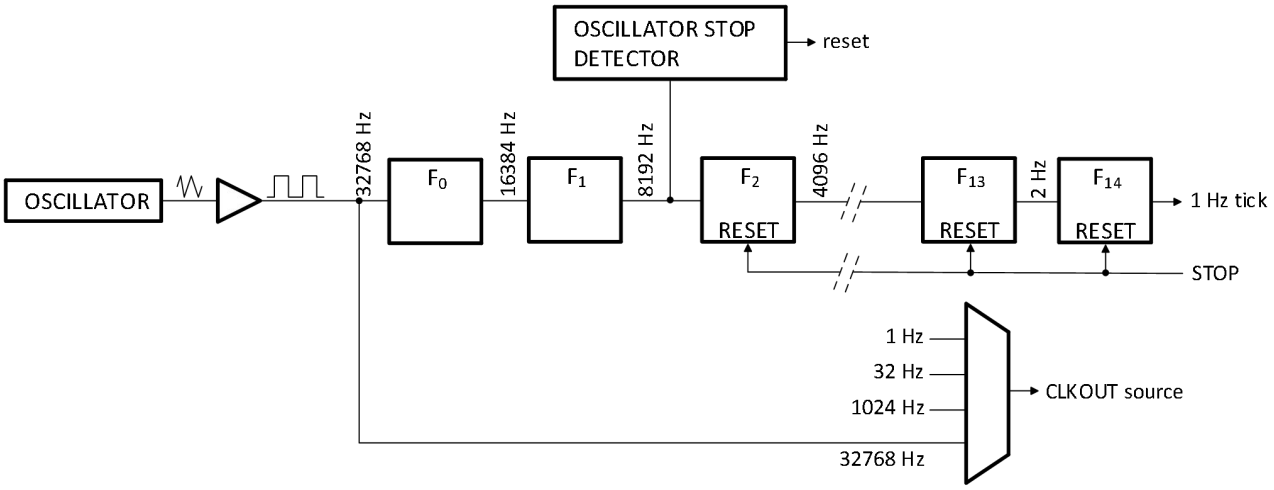

Fig 11. STOP bit functional diagram

The STOP bit function will not affect the output of 32.768 kHz on CLKOUT, but will stop the generation of 1.024 kHz, 32 Hz, and 1 Hz.

The lower two stages of the prescaler (F_0 and F_1) are not reset; and because the I^2C-bus is asynchronous to the crystal oscillator, the accuracy of re-starting the time circuits will be between zero and one 8.192 kHz cycle (see Figure 12).

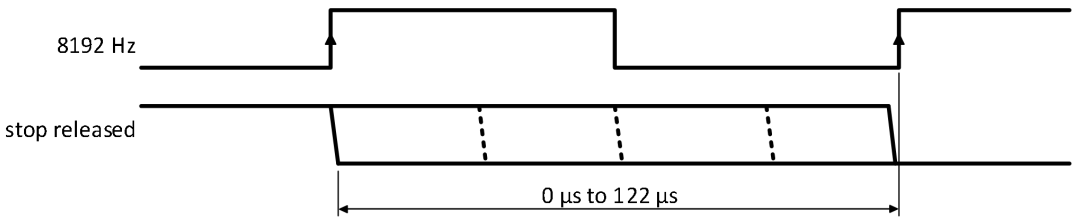

Fig 12. STOP bit release timing

Copyright © GATEMODE Corp.

Table 23. First increment of time circuits after STOP bit release

Bit STOP	Prescaler bits F_0F_1-F_2 to F_{14}	1 Hz tick	Time hh:mm:ss	Comment
Clock is running normally				
0	01-0 0001 1101 0100		12:45:12	prescaler counting normally
STOP bit is activated by user. F_0F_1 are not reset and values cannot be predicted externally				
1	XX-0 0000 0000 0000		12:45:12	prescaler is reset; time circuits are frozen
New time is set by user				
1	XX-0 0000 0000 0000		08:00:00	prescaler is reset; time circuits are frozen
STOP bit is released by user				
0	XX-0 0000 0000 0000	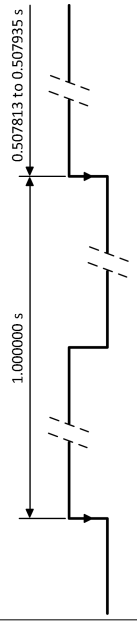	08:00:00	prescaler is now running
	XX-1 0000 0000 0000		08:00:00	-
	XX-0 0000 0000 0000		08:00:00	-
	XX-1 0000 0000 0000		08:00:00	-
	:		:	:
	11-1 1111 1111 1110		08:00:00	-
	00-0 0000 0000 0001		08:00:01	0 to 1 transition of F_{14} increments the time circuits
	10-0 0000 0000 0001		08:00:01	-
	:		:	:
	11-1 1111 1111 1111		08:00:01	-
	00-0 0000 0000 0000		08:00:01	-
	10-0 0000 0000 0000		08:00:01	-
	:		:	:
	11-1 1111 1111 1110		08:00:01	-
	00-0 0000 0000 0001		08:00:02	0 to 1 transition of F_{14} increments the time circuits

[1] F_0 is clocked at 32.768 kHz.

The first increment of the time circuits is between 0.507813 s and 0.507935 s after STOP bit is released. The uncertainty is caused by the prescalerbits F_0 and F_1 not being reset (see Table 23) and the unknown state of the 32 kHz clock.

Copyright © GATEMODE Corp.

6.11 Reset

The BM8563H includes an internal reset circuit which is active whenever the oscillator is stopped. In the reset state the I²C-bus logic is initialized including the address pointer and all registers are set according to Table 24. I²C-bus communication is not possible during reset.

Table 24. Register reset value[1]

Address	Register name	Bit							
		7	6	5	4	3	2	1	0
00h	Control_status_1	0	0	0	0	1	0	0	0
01h	Control_status_2	0	0	0	0	0	0	0	0
02h	VL_seconds	1	x	x	x	x	x	x	x
03h	Minutes	x	x	x	x	x	x	x	x
04h	Hours	x	x	x	x	x	x	x	x
05h	Days	x	x	x	x	x	x	x	x
06h	Weekdays	x	x	x	x	x	x	x	x
07h	Century_months	x	x	x	x	x	x	x	x
08h	Years	x	x	x	x	x	x	x	x
09h	Minute_alarm	1	x	x	x	x	x	x	x
0Ah	Hour_alarm	1	x	x	x	x	x	x	x
0Bh	Day_alarm	1	x	x	x	x	x	x	x
0Ch	Weekday_alarm	1	x	x	x	x	x	x	x
0Dh	CLKOUT_control	1	x	x	x	x	x	0	0
0Eh	Timer_control	0	x	x	x	x	x	1	1
0Fh	Timer	x	x	x	x	x	x	x	x

[1] Registers marked x are undefined at power-up and unchanged by subsequent resets.

6.11.1 Power-On Reset (POR) override

The POR duration is directly related to the crystal oscillator start-up time. Due to the long start-up times experienced by these types of circuits, a mechanism has been built in to disable the POR and hence speed up on-board test of the device. The setting of this mode requires that the I²C-bus pins, SDA and SCL, are toggled in a specific order as shown in Figure 13. All timings are required minimums.

Once the override mode has been entered, the device immediately stops, being reset, and normal operation may commence i.e. entry into the EXT_CLK test mode via I²C-bus access. The override mode may be cleared by writing logic 0 to TESTC. TESTC must be set to logic 1 before re-entry into the override mode is possible. Setting TESTC to logic 0 during normal operation has no effect except to prevent entry into the POR override mode.

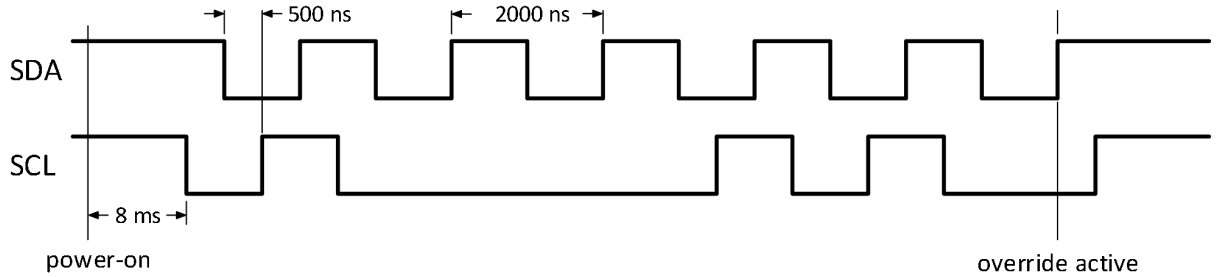

Fig 13. POR override sequence

Copyright © GATEMODE Corp.

7 Characteristics of the I²C-bus

The I²C-bus is for bidirectional, two-line communication between different ICs or modules. The two lines are a Serial DAta line (SDA) and a Serial CLock line (SCL). Both lines must be connected to a positive supply via a pull-up resistor. Data transfer may be initiated only when the bus is not busy.

7.1 Bit transfer

One data bit is transferred during each clock pulse. The data on the SDA line must remain stable during the HIGH period of the clock pulse as changes in the data line at this time will be interpreted as a control signal (see Figure 14).

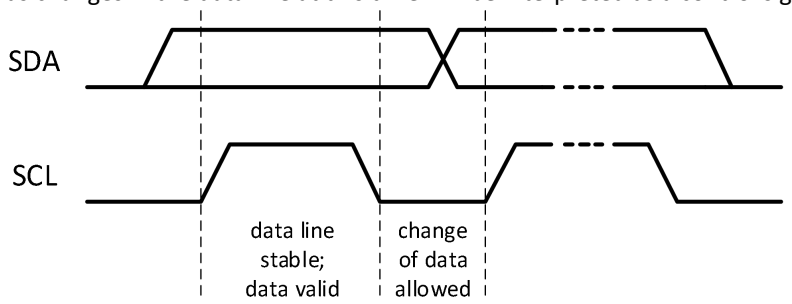

Fig 14. Bit transfer

7.2 START and STOP conditions

Both data and clock lines remain HIGH when the bus is not busy.

A HIGH-to-LOW transition of the data line while the clock is HIGH is defined as the START condition - S.

A LOW-to-HIGH transition of the data line while the clock is HIGH is defined as the STOP condition - P (see Figure 15).

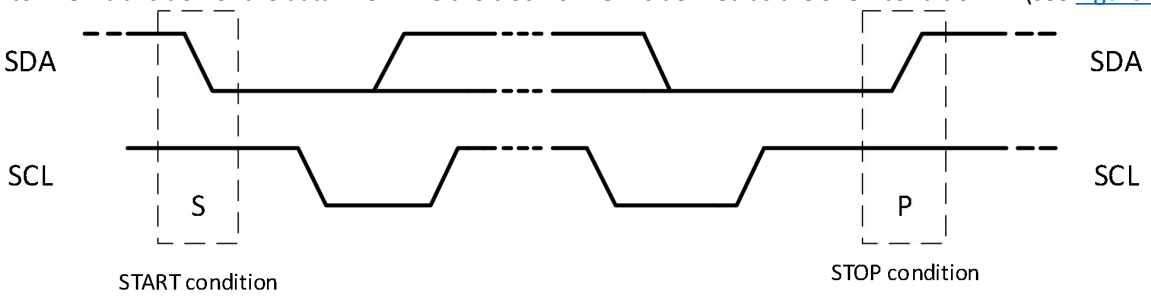

Fig 15. Definition of START and STOP conditions

7.3 System configuration

A device generating a message is a transmitter; a device receiving a message is a receiver. The device that controls the message is the master; and the devices which are controlled by the master are the slaves (see Figure 16).

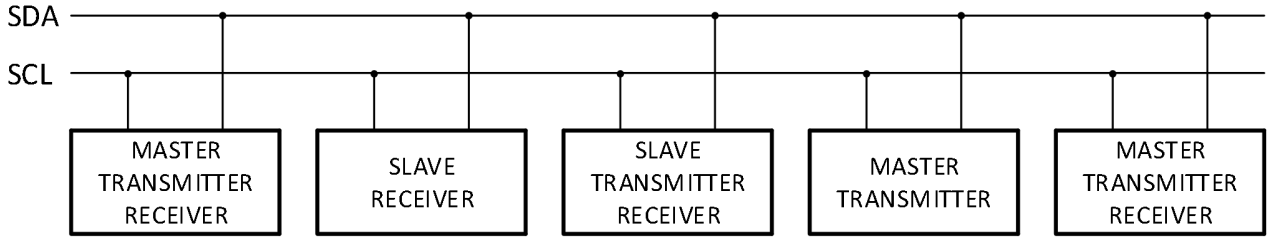

Fig 16. System configuration

Copyright © GATEMODE Corp.

7.4 Acknowledge

The number of data bytes transferred between the START and STOP conditions from transmitter to receiver is unlimited. Each byte of eight bits is followed by an acknowledge cycle.

- A slave receiver, which is addressed, must generate an acknowledge after the reception of each byte.
- Also a master receiver must generate an acknowledge after the reception of each byte that has been clocked out of the slave transmitter.
- The device that acknowledges must pull-down the SDA line during the acknowledge clock pulse, so that the SDA line is stable LOW during the HIGH period of the acknowledge related clock pulse (set-up and hold times must be taken into consideration).
- A master receiver must signal an end of data to the transmitter by not generating an acknowledge on the last byte that has been clocked out of the slave. In this event, the transmitter must leave the data line HIGH to enable the master to generate a STOP condition.

Acknowledgement on the I²C-bus is illustrated in Figure 17.

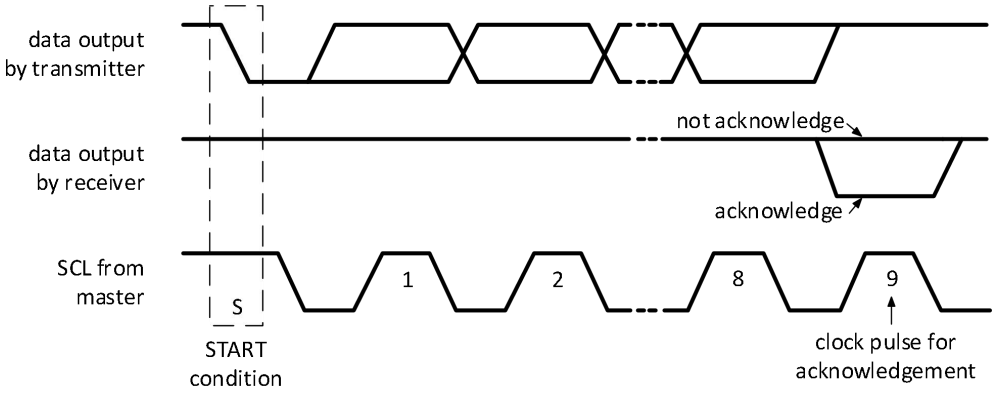

Fig 17. Acknowledgement on the I²C-bus

7.5 I²C-bus protocol

7.5.1 Addressing

Before any data is transmitted on the I²C-bus, the device which should respond is addressed first. The addressing is always carried out with the first byte transmitted after the start procedure.

The BM8563H acts as a slave receiver or slave transmitter. Therefore the clock signal SCL is only an input signal, but the data signal SDA is a bidirectional line.

Two slave addresses are reserved for the BM8563H:

Read: A3h (10100011)
Write: A2h (10100010)

The BM8563H slave address is illustrated in Figure 18.

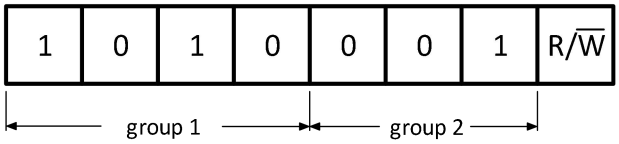

Fig 18. Slave address

Copyright © GATEMODE Corp.

7.5.2 Clock and calendar READ or WRITE cycles

The I²C-bus configuration for the different BM8563H READ and WRITE cycles is shown in Figure 19, Figure 20 and Figure 21. The register address is a 4-bit value that defines which register is to be accessed next. The upper four bits of the register address are not used.

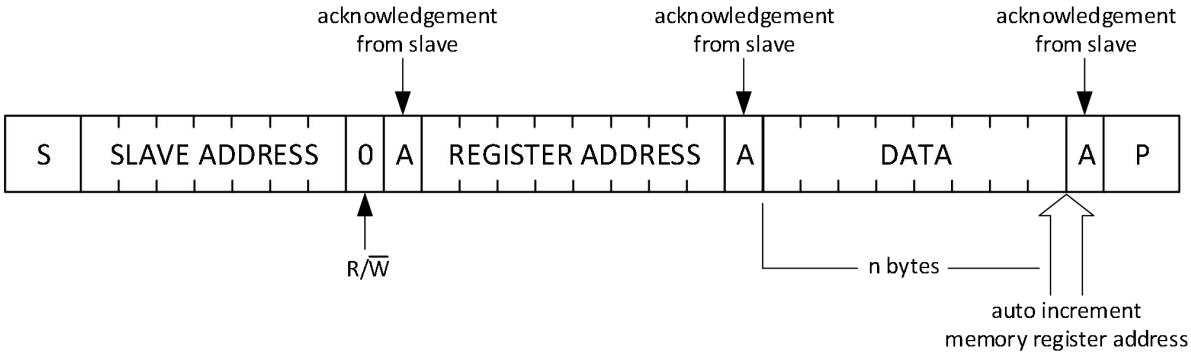

Fig 19. Master transmits to slave receiver (WRITE mode)

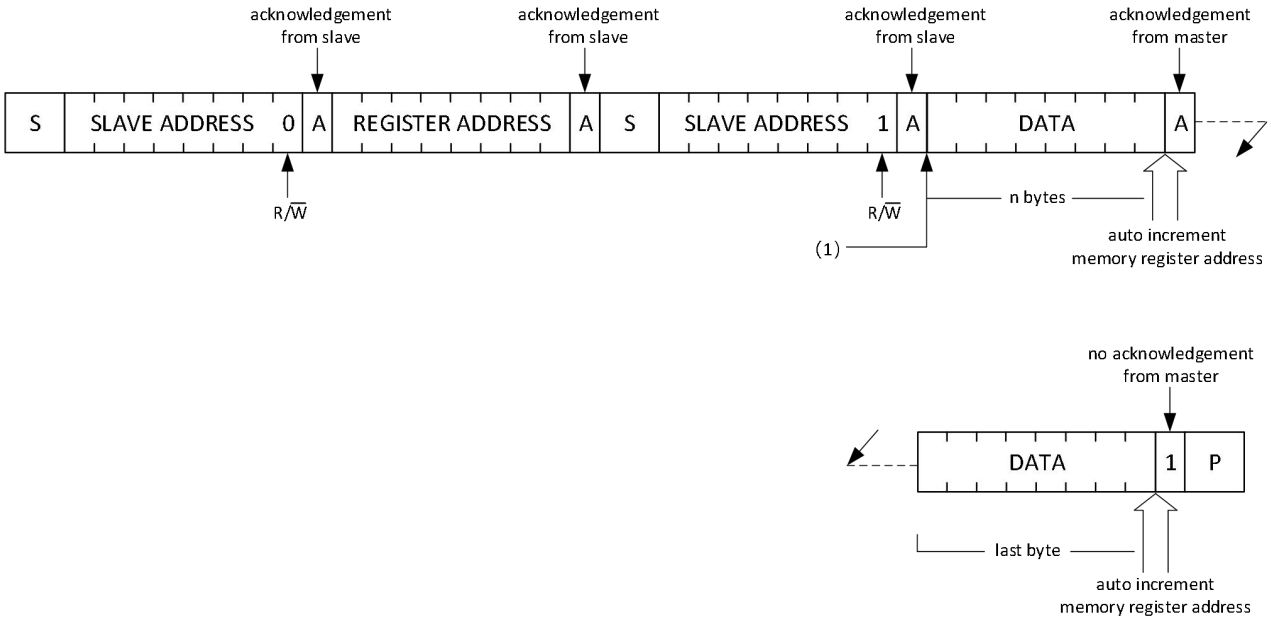

(1) At this moment master transmitter becomes master receiver and PCF8563 slave receiver becomes slave transmitter.

Fig 20. Master reads after setting register address (write register address; READ data)

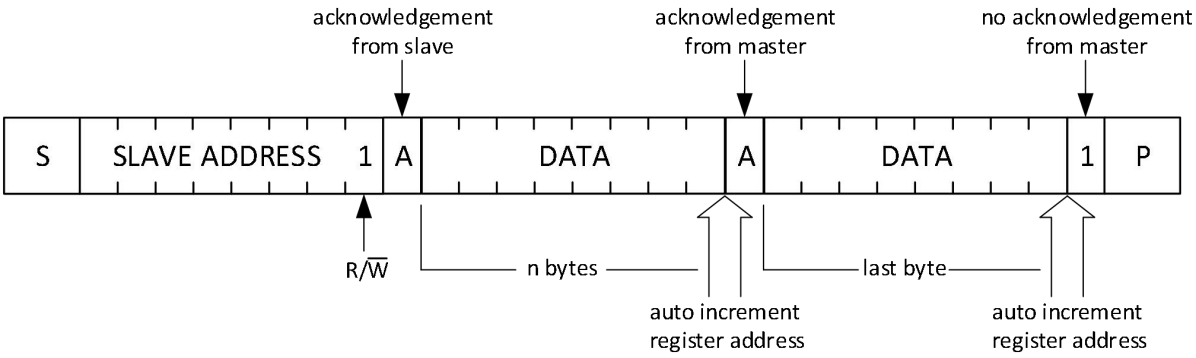

Fig 21. Master reads slave immediately after first byte (READ mode)

Copyright © GATEMODE Corp.

7.6 Interface watchdog timer

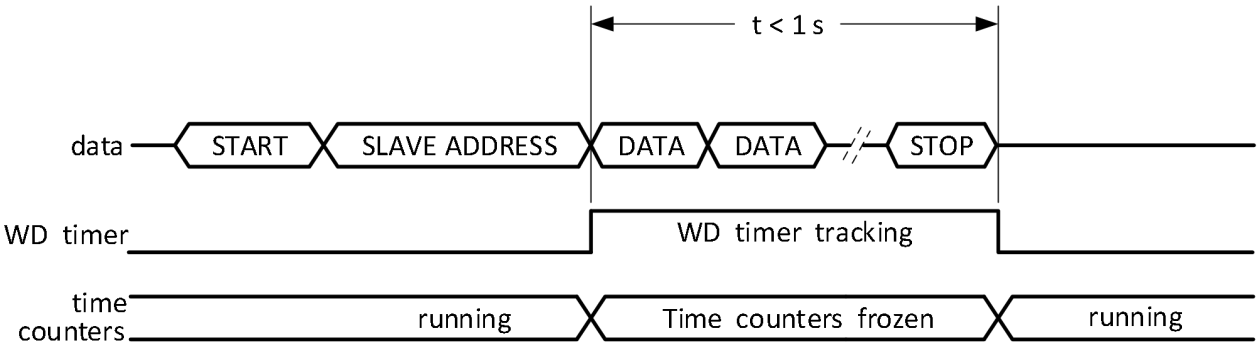

a. Correct data transfer: read or write

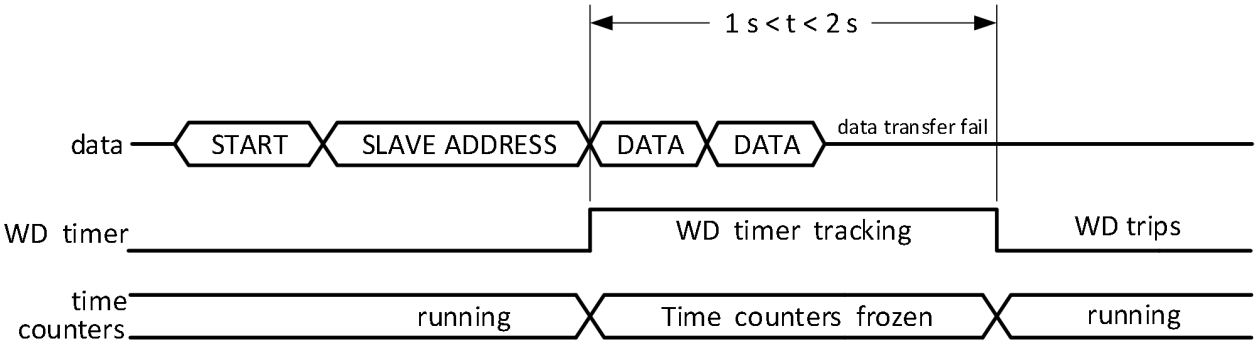

b. Incorrect data transfer; read or write

Fig 22. Interface watchdog timer

During read/write operations, the time counting circuits are frozen. To prevent a situation where the accessing device becomes locked and does not clear the interface, the BM8563H has a built in watchdog timer. Should the interface be active for more than 1 s from the time a valid slave address is transmitted, then the BM8563H will automatically clear the interface and allow the time counting circuits to continue counting. The watchdog will trigger between 1 s and 2 s after receiving a valid slave address. Each time the watchdog period is exceeded, 1 s will be lost from the time counters.

The watchdog is implemented to prevent the excessive loss of time due to interface access failure e.g. if main power is removed from a battery backed-up system during an interface access.

Copyright © GATEMODE Corp.

8 Application information

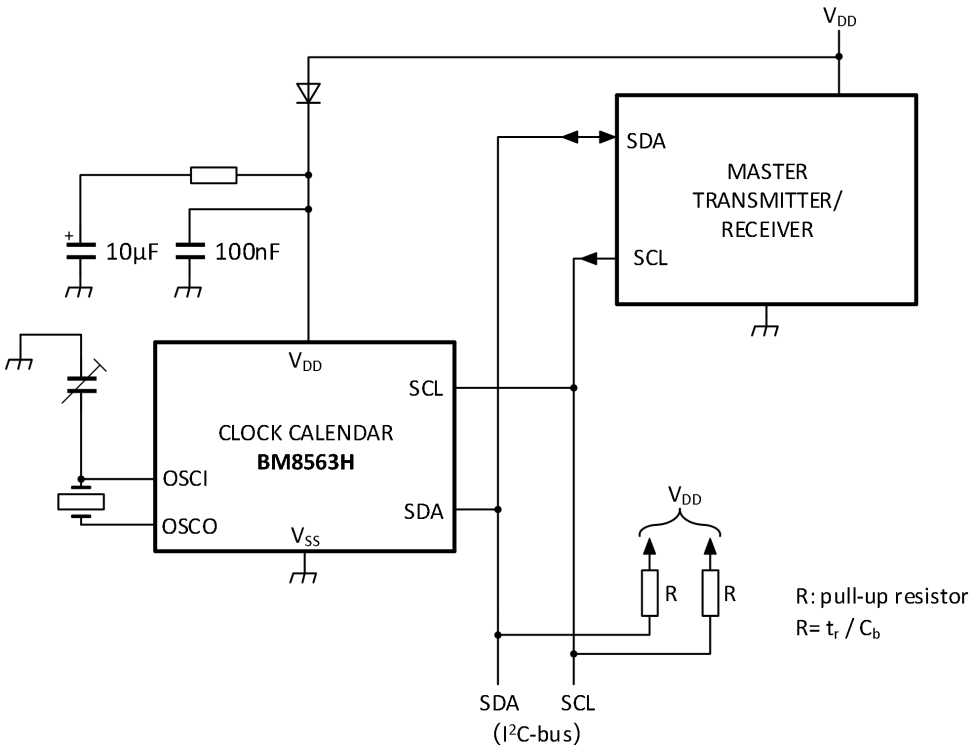

Fig 23. Application diagram

8.1 Quartz frequency adjustment

8.1.1 Method 1: fixed OSCI capacitor

By evaluating the average capacitance necessary for the application layout, a fixed capacitor can be used. The frequency is best measured via the 32.768 kHz signal available after power-on at pin CLKOUT. The frequency tolerance depends on the quartz crystal tolerance, the capacitor tolerance and the device-to-device tolerance (on average ±5 ppm). Average deviations of ±5 minutes per year can be easily achieved.

8.1.2 Method 2: OSCI trimmer

Using the 32.768 kHz signal available after power-on at pin CLKOUT, fast setting of a trimmer is possible.

8.1.3 Method 3: OSCO output

Direct measurement of OSCO out (accounting for test probe capacitance).

Copyright © GATEMODE Corp.

PACKAGE DIMENSION SOP8-L

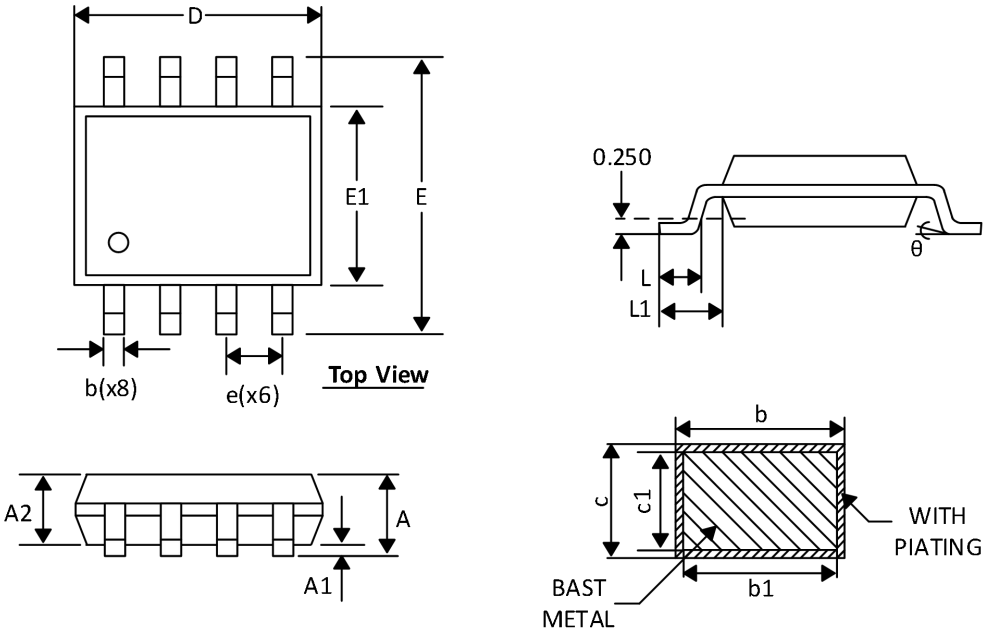

SYMBOLS	MILLIMETER		
	MIN	NOM	MAX
A	-	-	1.75
A1	0.10	0.175	0.25
A2	1.30	1.40	1.50
b	0.31	-	0.50
b1	0.30	0.40	0.45
c	0.20	-	0.24
c1	0.19	0.203	0.21
D	4.80	-	5.00
E	5.80	6.00	6.20
E1	3.80	-	4.00
e	1.27 BSC		
L	0.40	-	0.80
L1	1.05 REF		
θ	0°	-	8°

Copyright © GATEMODE Corp.

PACKAGE DIMENSION MSOP8

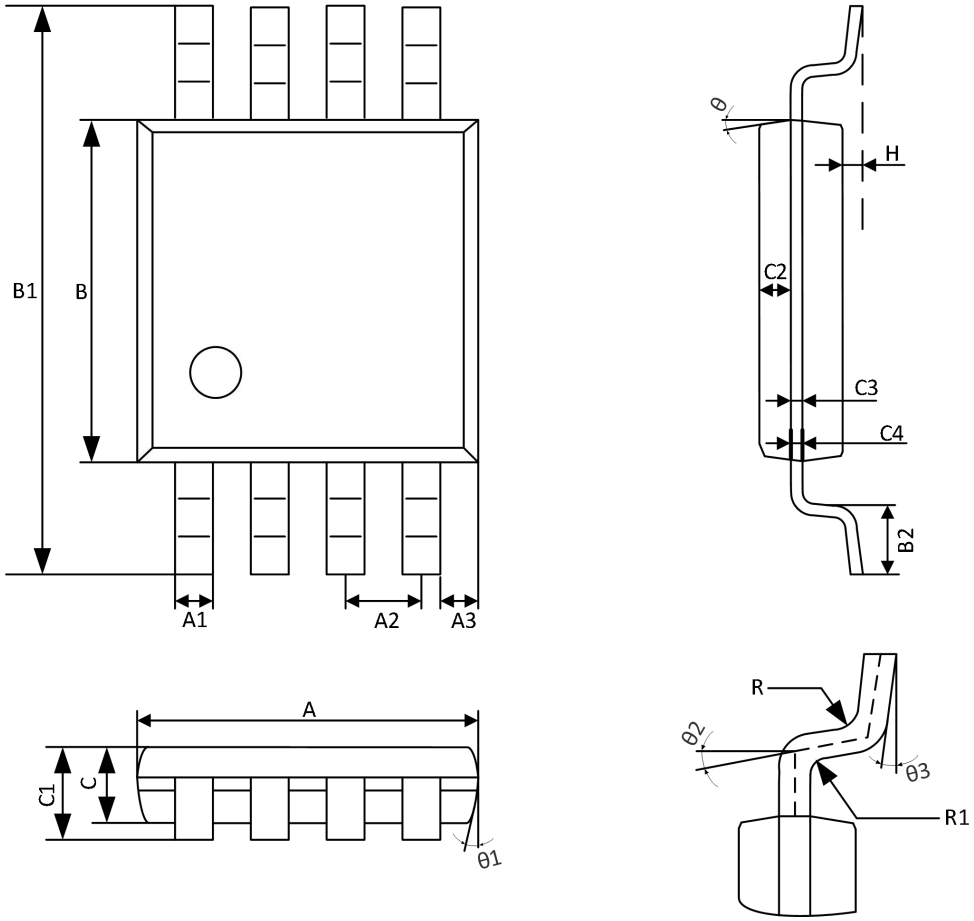

DIMENSION / SYMBOLS	MIN (mm)	MAX (mm)	DIMENSION / SYMBOLS	MIN (mm)	MAX (mm)
A	2.90	3.10	C3	0.152	
A1	0.28	0.35	C4	0.15	0.23
A2	0.65TYP		H	0.00	0.09
A3	0.375TYP		θ	12° TYP4	
B	2.90	3.10	θ1	12° TYP4	
B1	4.70	5.10	θ2	14° TYP	
B2	0.45	0.75	θ3	0° ~ 6°	
C	0.75	0.95	R	0.15TYP	
C1	--	1.10	R1	0.15TYP	
C2	0.328TYP				

Copyright © GATEMODE Corp.

PACKAGE DIMENSION TSSOP8

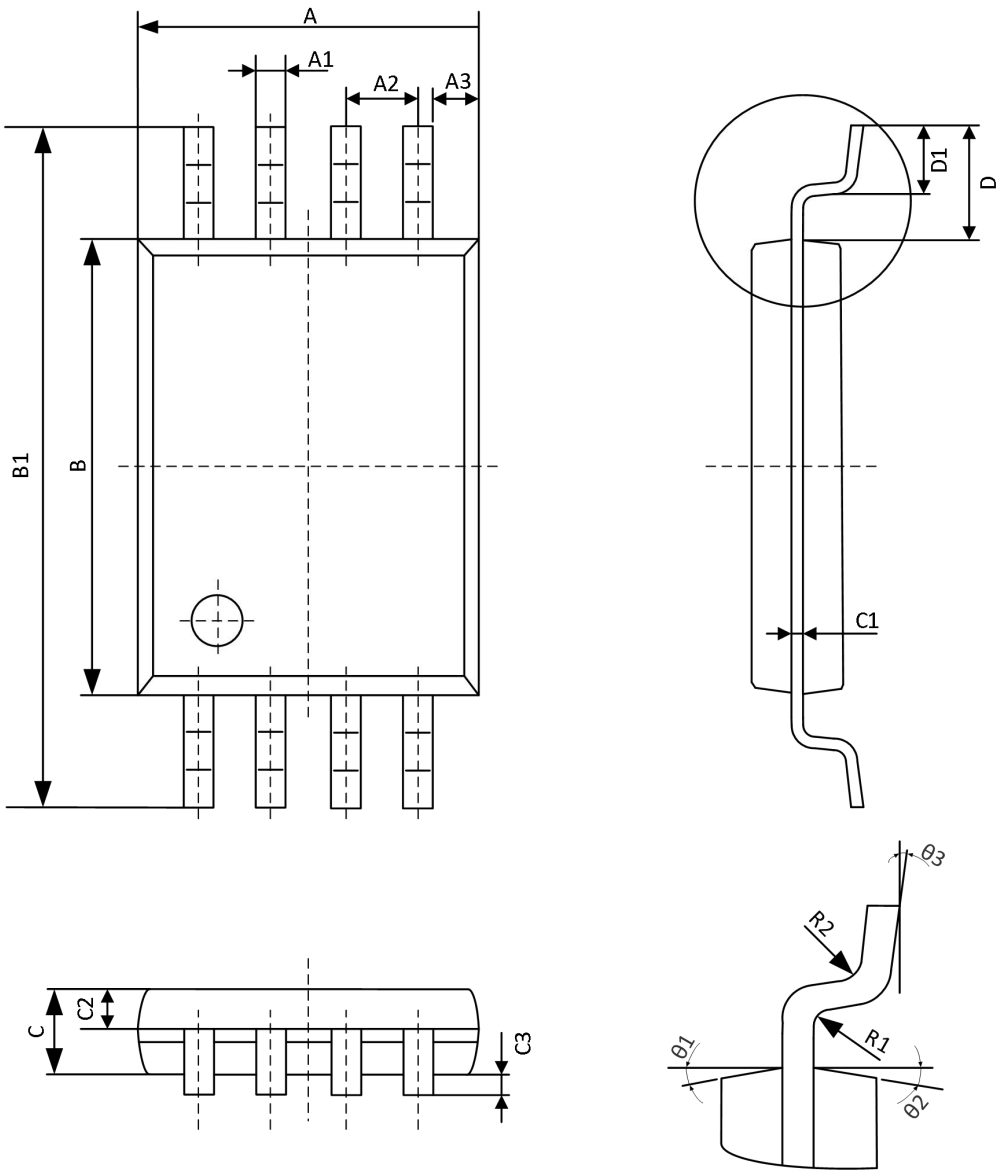

DIMENSION / SYMBOLS	MIN (mm)	MAX (mm)	DIMENSION / SYMBOLS	MIN (mm)	MAX (mm)
A	2.90	3.10	C3	0.05	0.15
A1	0.20	0.30	D	1.00REF	
A2	0.65 TYP		D1	0.50	0.70
A3	0.36	0.46	R1	0.15 TYP	
B	4.30	4.50	R2	0.15 TYP	
B1	6.30	6.50	θ1	12° TYP4	
C	0.95	1.05	θ2	12° TYP4	
C1	0.127 TYP		θ3	0° ~ 7°	
C2	0.39	0.49			

Copyright © GATEMODE Corp.

Order Information

Order number	Package	Operation Temperature Range	MSL Grade	Ship, Quantity	Green
BM8563HSA	SOP8-L	-40 to 85°C	3	T&R, 4000	Rohs
BM8563HMA	MSOP8	-40 to 85°C	3	T&R, 4000	Rohs
BM8563HHA	TSSOP8	-40 to 85°C	3	T&R, 4000	Rohs

Copyright © GATEMODE Corp.