■ Features

- Molding Inductor.
- Low Profile,Low Temp.
- Large Current.
- Customize For Different Need.
- Operating temperature:-40℃~ +125℃（Including self-temperature rise）.

■ Applications

- General Electronic.
- Video Device,TV,TFT.
- Power Module for PC.
- NB/Lap Top Computer.
- Server,VGA Card/Module.

■ Product Identification

YSPI	□□□□	—	□□□	□
(1)	(2)		(3)	(4)

(1)： Type

(2)： Dimensions

(3)： Inductance value

(4)： Inductance Tolerance： N=±30%,M=±20%， K=±10%

■ Shapes and Dimensions (Unit： mm)

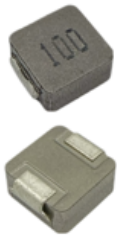

Example diagram

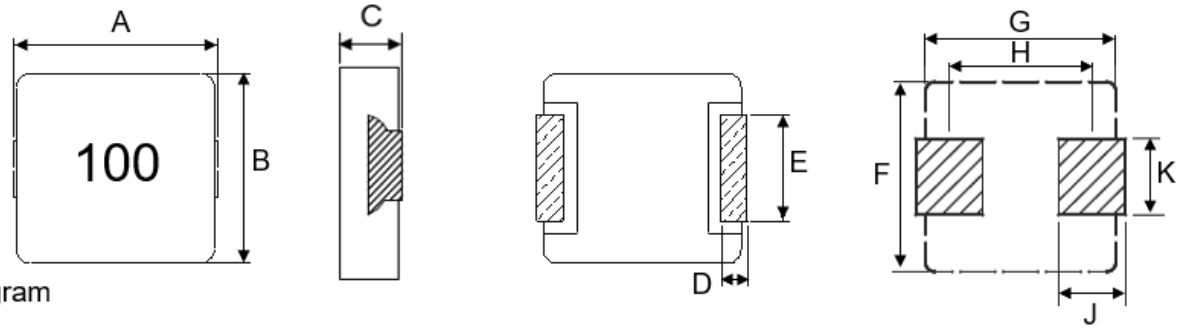

TYPE	A	B	C Max.	D	E	F Ref.	G Ref.	H Ref.	J Ref.	K Ref.
YSPI1050	11.0±0.5	10.0±0.3	5.0	2.2±0.5	4.5±0.3	11.0	11.0	8.2	3.25	5.0

■ Electrical Characteristics

Part Number	Inductance (μH) @100KHz/1V	DCR (mΩ)		Saturation Current (A)		Heat Rating Current (A)	
		Typ.	Max.	Typ.	Max.	Typ.	Max.
YSPI1050-100M	10±20%	23.5	32.0	12.0	11.0	7.0	6.5

※ All test data is referenced to 25 °C ambient.

※ Irms (A): The value of DC current when product temperature rise is ΔT40℃ (Ta=25℃).

※ Isat(A): The value of DC current when the inductance decreases 35% of its initial value.

※ Special remind: Circuit design, component placement, frequency, cooling system and etc. all will affect the product temperature. Please verify the actual product temperature in the final application.

※ Absolute maximum voltage 30VDC.

■ Heat rating current VS Saturation current curve

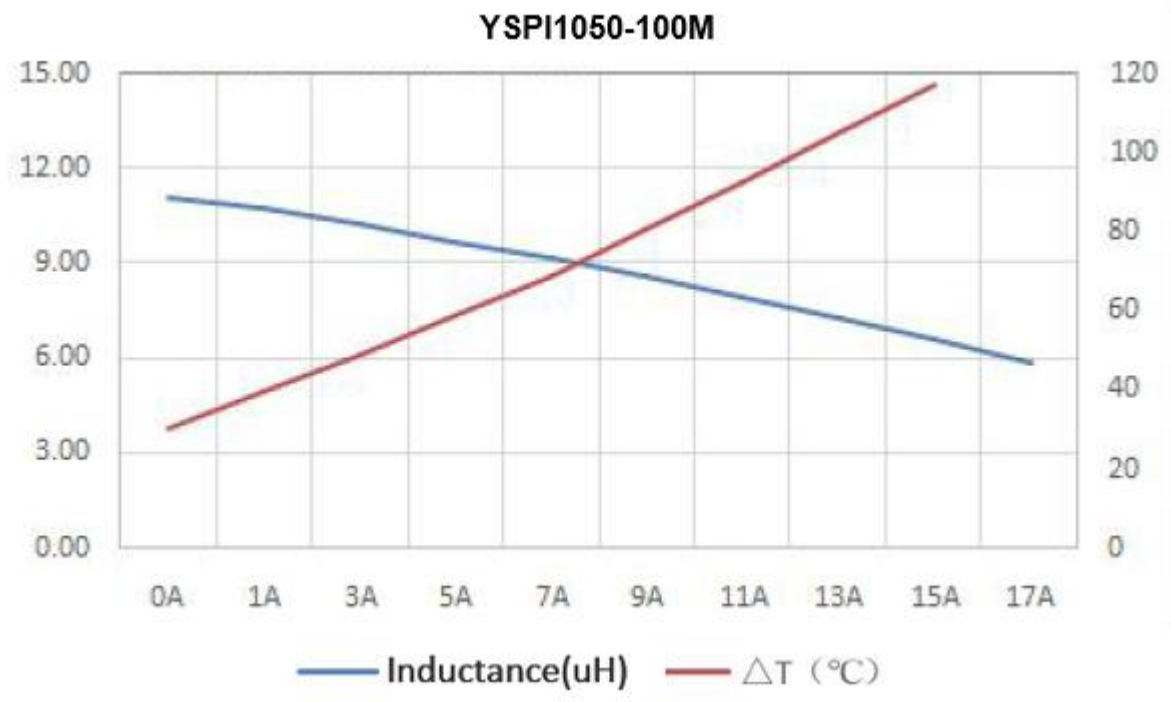

■ General Characteristics

NO.	ITEMS	CONDITIONS	SPECIFICATION
1	OPERATION TEMPERATURE STORAGE TEMPERATURE		-40 ~ +125℃ (INCLUDING COIL TEMPERATURE RISE)
2	TEMPERATURE COEFFICIENT	-30 ~ +105℃	0 ~ 2000ppm/℃
3	FIXING STRENGTH	SAMPLE IS PUSHED IN THREE DIRECTIONS OF X, Y AND Z WITH FORCE OF 5. 0N FOR 10±5 SECONDS. AFTER SOLDERING BETWEEN COPPER PLATE AND ELECTRODES.	NO ELECTRODE DETACHMENT.
4	RESISTANCE TO SOLDERING HEAT TEST	REFER TO THE SPEC "STD-001NP".	NO MECHANICAL BREAKAGE. DEVIATION RELATIVE TO INITIAL VALUE: L: WITHIN ±10%
5	SOLDERABILITY TEST	IMMERSE THE ELECTRODE IN FLUX FOR 5 SECONDS. THEN DIP THE ELECTRODE INTO A SOLDERING BATH OF 245±5℃ FOR 2±0.5 SECONDS.	OVER 95% OF THE SURFACE BEING IMMERSED SHALL BE COVERED WITH NEW SOLDER UNIFORMLY.
6	VIBRATION TEST	AMPLITUDE: 1.5mm P-P FREQUENCY:10～55～10Hz (1 MINUTE PER CYCLE) DURATION: 1 HOUR IN EACH OF X, Y, Z AXIS.	DEVIATION RELATIVE TO INITIAL VALUE: L: WITHIN ±10%
7	HUMIDITY TEST	TEMPERATURE: 40℃±2℃ HUMIDITY: 90%～95%RH DURATION: 96±4 HOURS.	DEVIATION RELATIVE TO INITIAL VALUE: L: WITHIN ±10%
8	THERMAL SHOCK TEST	20 CYCLES OF +125℃ FOR 30 MINUTES, -40℃ FOR 30 MINUTES. CHARACTERISTICS ARE MEASURED AFTER THE AMBIENT AIR EXPOSURE OF 1 HOUR	DEVIATION RELATIVE TO INITIAL VALUE: L: WITHIN ±10%
9	HIGH TEMPERATURE STORAGE TEST	TEMPERATURE: 125℃±2℃ DURATION: 96±4 HOURS	
10	LOW TEMPERATURE STORAGE TEST	TEMPERATURE: -40℃±3℃ DURATION: 96±4 HOURS.	

※ Standard testing conditions:

Unless otherwise specified,the standard range of atmospheric conditions for measurements and tests are as follows:

Ambient temperature:15℃ ~ 35℃. Relative humidity : 25% ~85%. Air pressure: 86kPa ~106kPa.

If there is doubt about the results,measurement shall be made within the following limits:

Ambient temperature:20℃±1℃. Relative humidity:63% ~ 67%. Air pressure: 86kPa ~106kPa.

■ Reflow profile for SMT components

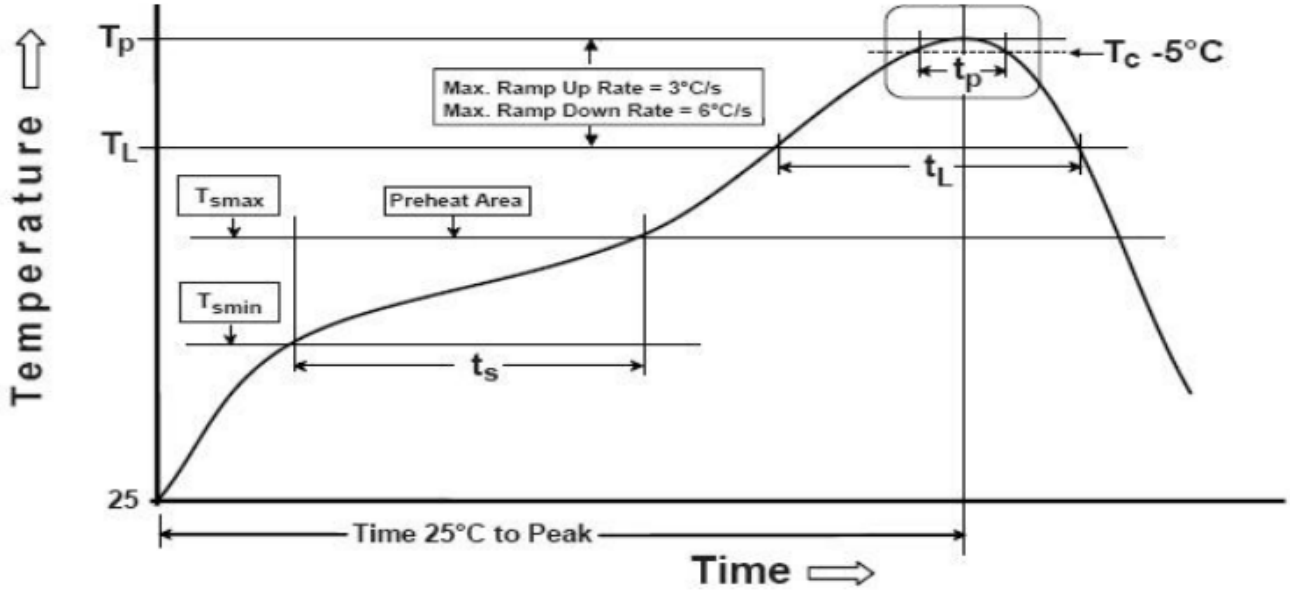

Reflow is referred to standard IPC/ JEDEC J-STD-020D

Profile Feature		Lead(Pb) Free solder
Preheat and soak	·temperature Min.(Ts min)	150℃
	·temperature Max.(Ts max)	200℃
	·time(Tsmin to Ts max)(ts)	60-120 Seconds
Average ramp up rate Tsmax to Tp		3℃/Second Max.
Liquidous temperature (TL)		217 °C
Time (TL) maintained above TL		60-150 seconds
Peak package body temperature (Tp)		**Table2**
Time (tp)* within 5 °C of the specified classification temperature (Tc)		30* seconds
Average Ramp-down rate (Tp to TL)		6 °C/second max
Time 25 °C to peak temperature		8 minutes max.

Table2. Pb-Free Process - Classification Temperatures (Tc)

Package Thickness	Volume mm3 <350	Volume mm3 350~2000	Volume mm3 >2000
<1.6 mm	260℃	260℃	260℃
1.6mm- 2.5mm	260℃	250℃	245℃
>2.5 mm	250℃	245℃	245℃

■ Taping Dimensions(Unit:mm)

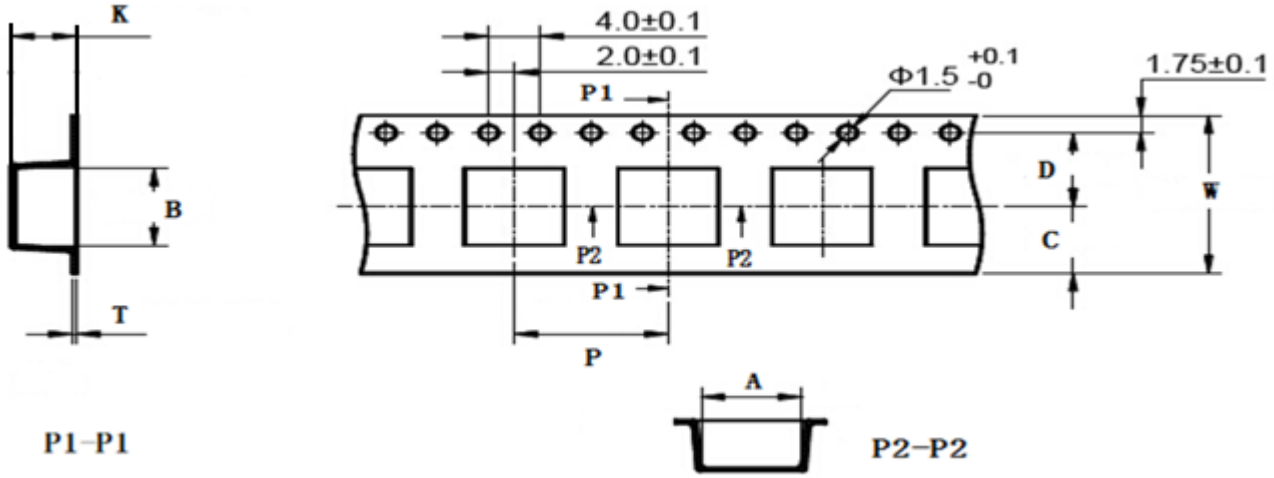

TYPE	W	A	B	C	D	P	K	T	MPQ
YSPI1050	24.0±0.3	10.35±0.1	10.95±0.1	10.75	11.5±0.1	16.0±0.1	5.3±0.1	0.35±0.05	800

■ Reel Dimensions(Unit:mm)

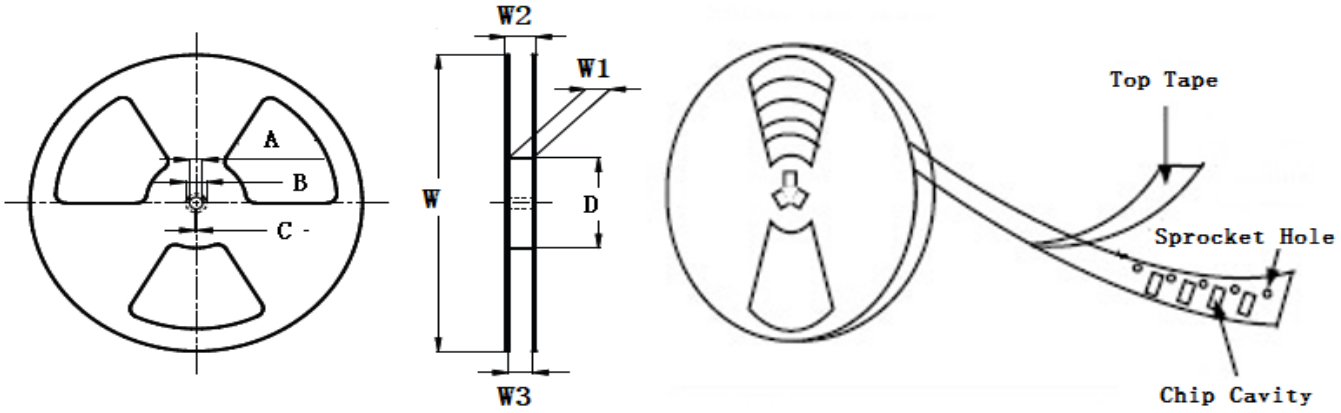

TYPE	W	W1	W2	W3	A	B	C	D
YSPI1050	330±2.0	2.4±2.0	22.4Max.	23.9 Min	13.0±0.50	21.0±0.80	2.0±0.50	100 Min

■ Direction of rolling

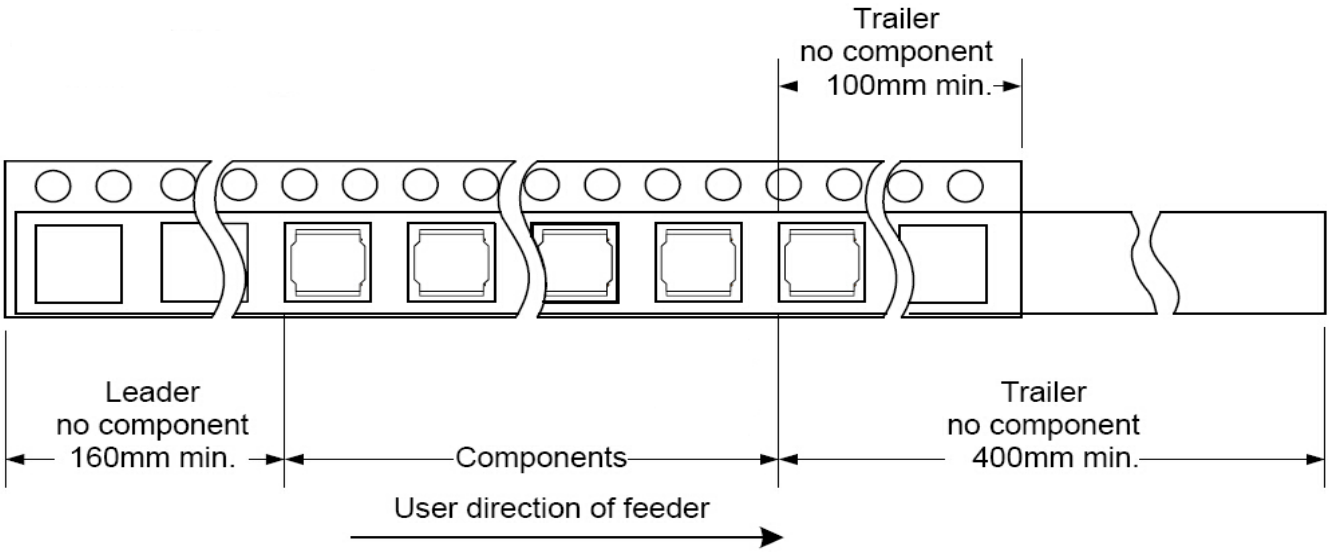

■ Cover tape peel off condition

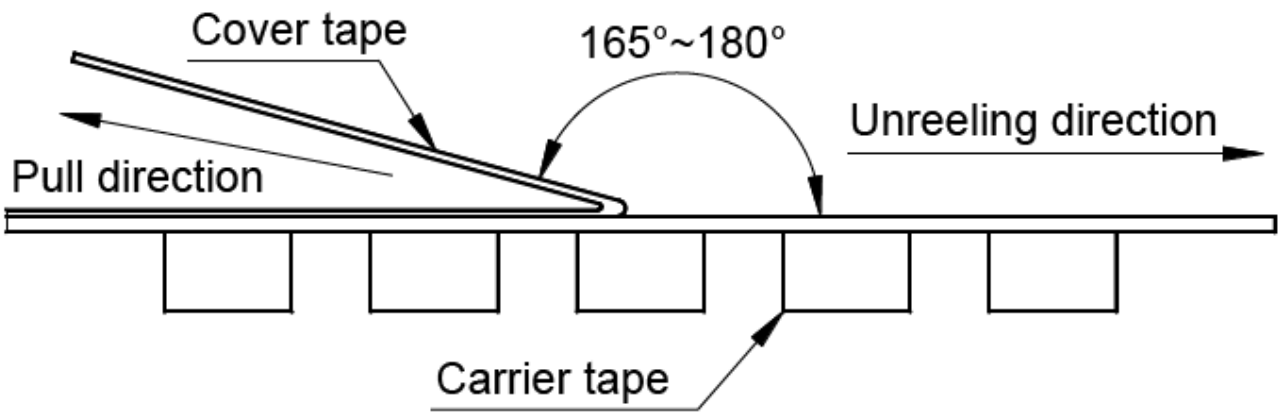

Cover tape peel force shall be 0.1N to 1.3N.

Reference peel speed 300±10mm/min.