NEWOPTO
鑫 永 诚 光 电

惠 州 市 鑫 永 诚 光 电 科 技 有 限 公 司
Huizhou Newopto photoelectric Technology Co., Ltd.

产 品 承 认 书
SPEC FOR APPROVAL

客户名称 Customer	
产品型号 Model	XYC-IRB76C90-BL4
承认编号 Part No.	
编制日期 Send Date	2026-06-08
版本 Edition	A0

核准(Approval)	审核(Checked)	编制(Edit)
谭起富	丁　杰	张崇彪

客户确认(Customer Signatures)		

NEW OPTO

地址：惠州市仲恺高新区潼湖镇三和村和溪路 252 号联东 U 谷 9 号厂房
Address:Building 9, Liandong U Valley, No. 252 Hexi Road, Sanhe Village, Tonghu Town, Zhongkai High tech Zone, Huizhou City,China
电话(Tel): 0752—7987222　　网址(Web site):http//www.xycgd.com
传真(Fax): 0752—7987000　　邮箱(E-mail):xycgd888@163.com

目录 Contents

封面 cover 1

产品信息 Product information 3

极限参数 Absolute Maximum Ratings at (Ta=25℃) 4

光学特性 Optical Characteristics (Ta=25℃) 4

可靠性试验 Reliability Test 5

光电特性曲线 Typical photoelectric characteristics curves 6

产品外型尺寸 Size of products and dimensions 7

包装规格 Packing Specification 8

回流焊 Refolw 10

使用注意事项 Precautions 12

NEW OPTO

地址：惠州市仲恺高新区潼湖镇三和村和溪路 252 号联东 U 谷 9 号厂房
Add:Building 9, Liandong U Valley, No. 252 Hexi Road, Sanhe Village, Tonghu Town, Zhongkai High tech Zone, Huizhou City,China
电话(Tel):0752—7987222 网址(Web site):http//www.xycgd.com
传真(Fax):0752—7987000 邮箱(E-mail):xycgd888@163.com

鑫永诚 2835 贴片 LED，它具有体积小巧发射功率强、发光角度匀均、散热快等优点，该款器件适用于可视门铃，安防监控等其应用。

NEW OPTO 2835 SMD infrared LED has the advantages of compact size, strong emission power , uniform light reception angle,fast heat dissipation and so on.This device is suitable for visual doorbell, security monitoring applications.

特性 Features

- 峰值波长 830nm Peak wavelength 入 p=830nm
- 高可靠性 High reliability
- 低功耗 Low Power Consumption
- 符合 RoHS RoHS compliant

应用 Applications

- 红外应用系统 Infrared applications systems
- 工业设备 Industrial equipment
- 红外相机 Infrared Illumination for cameras
- 机器视觉系统 Machine visual systems
- 安防监控 security monitoring

NEW OPTO

地址：惠州市仲恺高新区潼湖镇三和村和溪路 252 号联东 U 谷 9 号厂房
Add:Building 9, Liandong U Valley, No. 252 Hexi Road, Sanhe Village, Tonghu Town, Zhongkai High tech Zone, Huizhou City,China
电话(Tel):0752—7987222 网址(Web site):http//www.xycgd.com
传真(Fax):0752—7987000 邮箱(E-mail):xycgd888@163.com

极限参数 Absolute Maximum Ratings at (Ta=25℃)

电气特性 Electrical characteristics	符号 Symbol	额定值 Rated Value	单位 Unit
最大持续工作电流 Max continuous working current	IF	100	mA
最大脉冲工作电流* Max pulse current	IFP	1000	mA
反向击穿电压 Reverse breakdown voltage	VR	5	V
最大功耗 Power dissipation	Pd	160	mW
工作温度 Operating Temperature	Topr	-30--+85	°C
储存温度 Storage Temperature	Tstg	-40--+100	°C

Note：* Pulse width≦100μs, Duty≦1%

光学特性 Optical Characteristics (Ta=25℃)

参数 Parameter	符号 Symbol	测试条件 Test Condition	最小 Min	典型 Typ	最大 Max	单位 Unit
发射波长 Wavelength	λp	IF=100mA	--	830	--	nm
光功率 luminous power	Po	IF=100mA	--	46	--	mW
辐射强度 Radiant Intensity	Ie	IF=100mA	--	6.5	--	mW/sr
工作电压 Forward Voltage	VF	IF=100mA	--	1.6	--	V
反向电流 Reverse current	IR	VR=5V	--	--	10	μA
发射角度 Emission Angle	2θ½	IF=100mA	--	90	--	deg

NEW OPTO

可靠性试验 Reliability Test

测试项目 Test Parameter	参考标准 Reference Criterion	测试条件 Test Condition	时间 Time	样品数 Quantity	Ac/Re
耐焊接热 Resistance to Soldering Heat	JESD22-B106	260℃±5℃	5 sec	22PCS	0/1
冷热循环 Thermo cycling	JESD22-A104	+105℃(15min) 5min -40℃(15min)	100 cycles	22PCS	0/1
冷热冲击 Thermal Shock	JESD22-A104	+105℃(30min) 5min -40℃(30min)	100 cycles	22PCS	0/1
高温贮存 High Temperature storage	JESD22-A103	+100℃	1000H	22PCS	0/1
低温贮存 Low Temperature storage	JESD22-A119	-40℃	1000H	22PCS	0/1
寿命测试 Operating Life Test	JESD22-A108	IF=100mA	1000H	22PCS	0/1
高温高湿 High Temperature High Humidity	JESD22-A101	TC=85℃ RH=85%	1000H	22PCS	0/1

NEW OPTO

地址：惠州市仲恺高新区潼湖镇三和村和溪路 252 号联东 U 谷 9 号厂房
Add:Building 9, Liandong U Valley, No. 252 Hexi Road, Sanhe Village, Tonghu Town, Zhongkai High tech Zone, Huizhou City,China
电话(Tel):0752—7987222 网址(Web site):http//www.xycgd.com
传真(Fax):0752—7987000 邮箱(E-mail):xycgd888@163.com

光电特性曲线 Typical electro-optical characteristics curves

光谱分布特性曲线
Relative Spectral Distribution

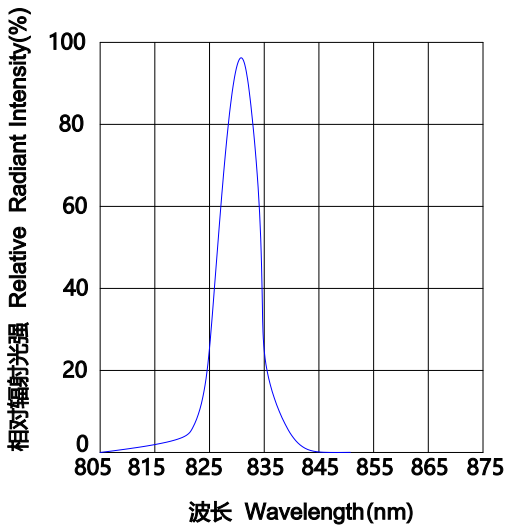

正向电流降额曲线
Forward Current Derating Curve

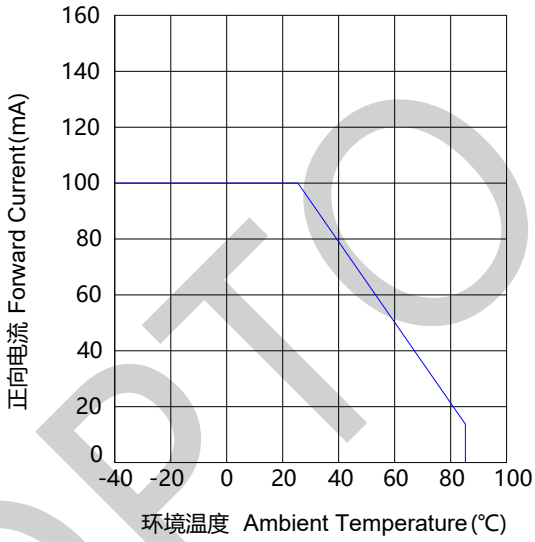

电流vs电压曲线图
Current & Voltage Curve

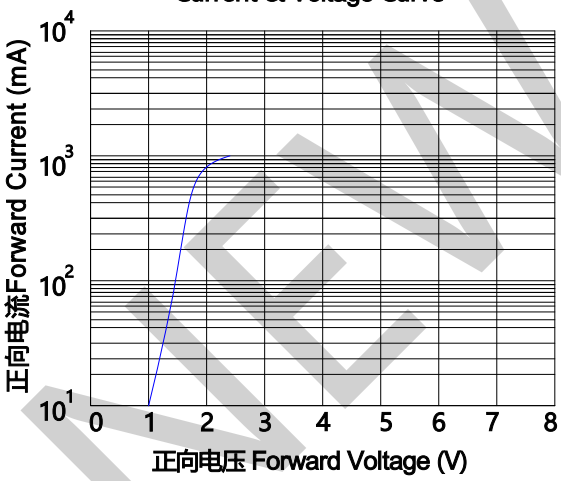

辐射光强分布特性曲线
Radiant Intensity Spatial Distribution

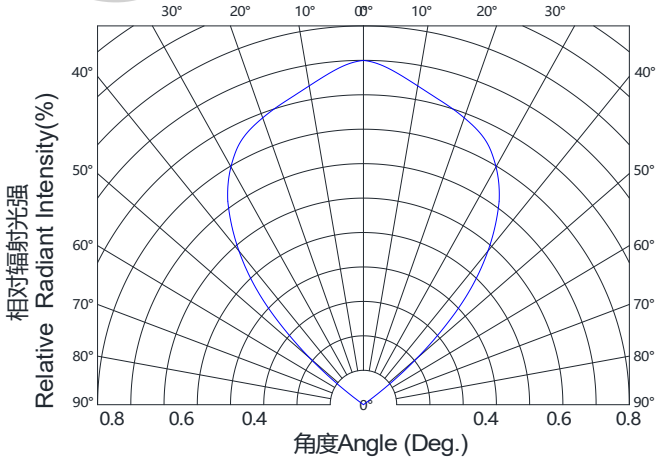

NEW OPTO

地址：惠州市仲恺高新区潼湖镇三和村和溪路 252 号联东 U 谷 9 号厂房
Add:Building 9, Liandong U Valley, No. 252 Hexi Road, Sanhe Village, Tonghu Town, Zhongkai High tech Zone, Huizhou City,China
电话(Tel):0752—7987222 网址(Web site):http//www.xycgd.com
传真(Fax):0752—7987000 邮箱(E-mail):xycgd888@163.com

产品外型尺寸 Package outline dimensions

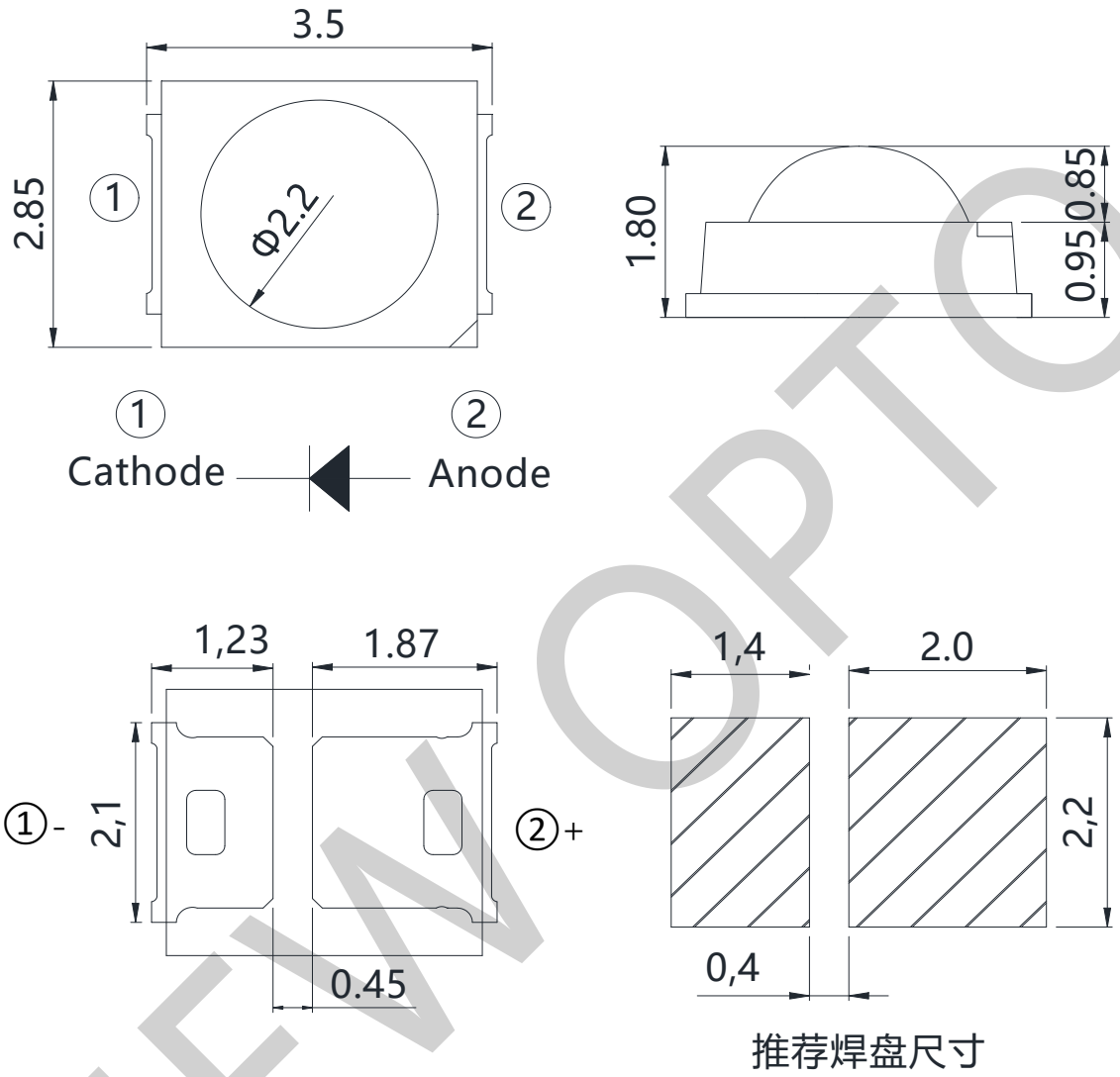

备注：所有尺寸单位均为 mm，如无特殊说明误差范围为±0.15mm

Note：All dimensions in mm,tolerance is ±0.15mm unless otherwise noted

NEW OPTO

包装规格 Packing Specification

■ 载带规格 Carrier Tape

编带 2000pcs/卷 Quantity 2000 pcs Per Scroll

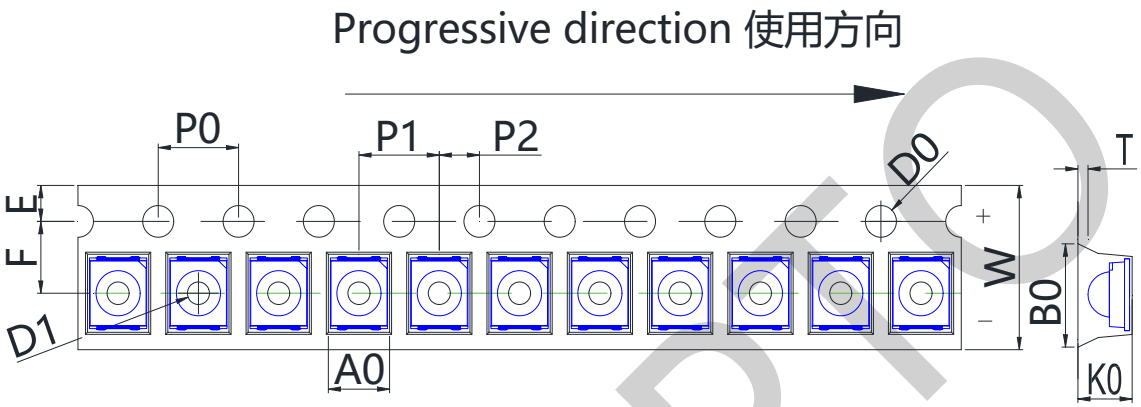

Symbol	A0	B0	K0	P0	P1	P2
SPEC	3.05±0.1	3.75±0.1	2.15±0.1	4.0±0.1	4.0±0.1	2.0±0.1
Symbol	W	T	E	F	D0	D1
SPEC	8.0±0.1	0.25±0.05	1.75±0.10	3.5±0.1	1.5±0.1	1.1±0.05

■ 卷轴尺寸 Reel Dimensions

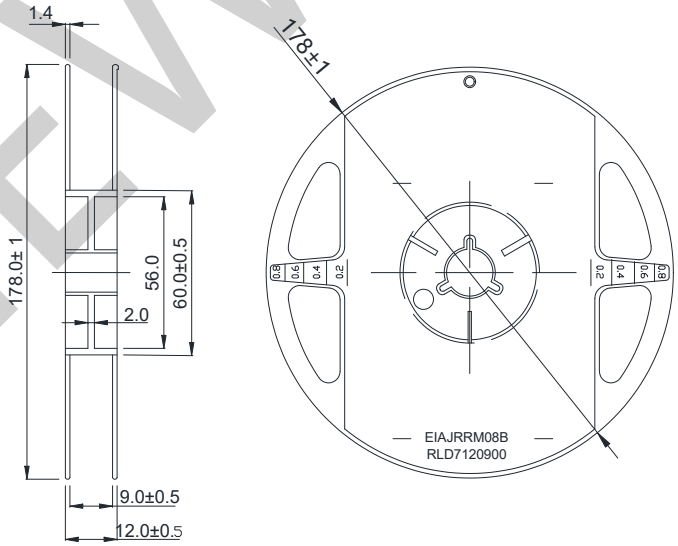

备注：若无特别标注，图中尺寸公差为±0.2mm，单位=mm

Note：Tolerance s unless mentioned ±0.01mm. Unit=mm

NEW OPTO

地址：惠州市仲恺高新区潼湖镇三和村和溪路 252 号联东 U 谷 9 号厂房
Add:Building 9, Liandong U Valley, No. 252 Hexi Road, Sanhe Village, Tonghu Town, Zhongkai High tech Zone, Huizhou City,China
电话(Tel):0752—7987222 网址(Web site):http//www.xycgd.com
传真(Fax):0752—7987000 邮箱(E-mail):xycgd888@163.com

■ 包装步骤 Moisture Resistant Packing Process

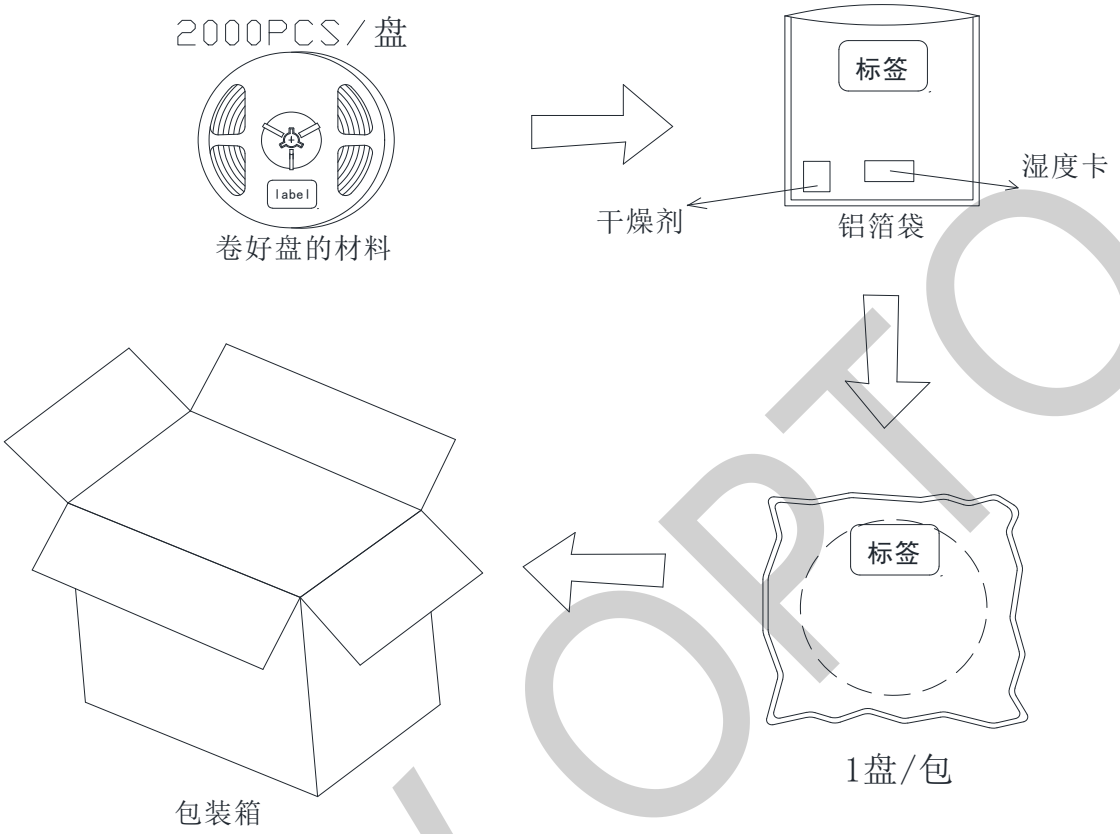

■ 标签规格 Label specification

NEW OPTO 鑫永诚光电 惠州市鑫永诚光电科技有限公司
Tel：0752-7987222 Fax：0752-7987000
http://www.xycgd.com

料号	Material Number	
型号	Model Number	
单号	Lot.Number	RoHS
箱号	Box Number	
数量	Quantity	
日期	Date	

NEW OPTO

回流焊 Refolw

■ 回流焊接：推荐使用以下无铅回流焊接温度图进行

Roflow Soldering:Use the conditions shown in the under Figure of PB-Free Reflow Soldering.

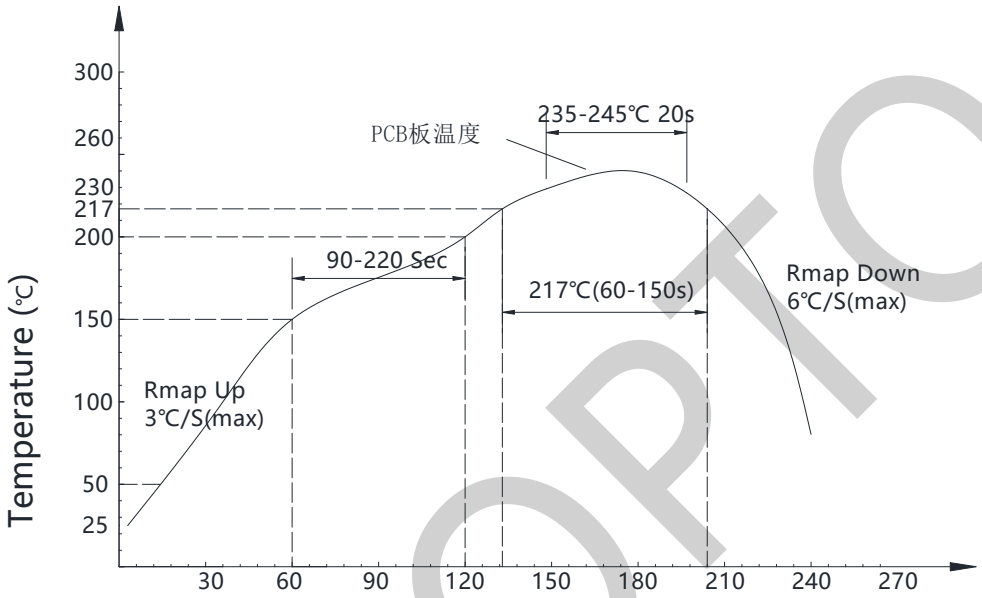

■ 回流焊接 Reflow Soldering

- 回流焊次数不可以超过一次，否则 ALS 可能损坏。

  Reflow soldering should not be done more than once, or ALS will be damaged.

- 当焊接时，不要在材料受热时用力压胶体表面。

  When soldering,do not put stress on the ALS during heating.

- 建议回流链速：80-100cm/min（回流炉以 8 温区为基准，温区越多建议使用链速更快）

  Please be sure the speed of the chain is 80-100cm/min（The reflow furnace is based on 8 temperature zone,the more temperature zone ,the faster speed of the chain is recommended.）

■ 络铁焊接 Soldering Iron

- 如使用手工焊接，建议使用小于 25 瓦的电络铁，络铁温度必须空置在 300℃以下，焊接时间需控制在 3 秒钟以内，且每个点击只能焊接一次。

  If solder manually, it is recommended to use soldering iron less than 25W.The temperature of the iron must be kept below 300℃.And soldering time should be within 3 seconds,each point can only be soldered once only.

- 当焊接时，不要在材料受热时用力压胶体表面。

  When soldering,do not put stress on the LED colloid surface during heating.

- 手工焊接只可焊接一次。
- Manually soldering should be done once only
- 器件外部温度在 40℃以下时，才可以对其进行处理。避免高温时操作对 LED 造成损伤。

NEW OPTO

Handing of the SMD LED should be done when the package has been cooled down to below 40℃ or less.This is to prevent LED failures due to thermal-mechanical stress during handing.

■ 清洗 Cleaning

- 在焊接后推荐使用酒精进行清洗，在温度不高于 30℃的条件下持续 3 分钟，不高于 50℃的条件下持续 30 秒。使用其他类似溶剂清洗前，请先确认使用的溶剂不会对 LED 的封装和陶瓷底座部分造成损伤。

  It is recommended that alcohol be used as the solvent for cleaning after soldering.Cleaning should be done under 30℃ for 3 minutes or 50℃ for 30 seconds.When using other solvents,it should be confirmed beforehand whether the solvents will dissolve the package and the resin or not.

- 回流焊次数不可以超过两次，两次回流焊时间间隔如果超过 24 小时，LED 可能由于吸湿而损坏。

  Reflow soldering should not be done more than two times.If time interval of two reflow soldering more than 24 hours ,LED may be damaged by absorbing moisture.

■ 修补 Repairing

- LED 回流焊后不应该修复，当修复是不可避免时，必须使用双头络铁，但必须事先确认此种方式会或不会损坏 LED 本身的特性。

  Repair should not be done after the LEDs have been soldered. When repairing is unavoidable, a double-head soldering iron should be used(as below figure).It should be confirmed in advance the characteristics of LEDs will not be damaged by repairing.

注意：此一般指导原则并不适用于所有 PCB 设计和焊接设备的配置。具体工艺收到诸多因素的影响，请根据特定的 PCB 设计和焊接设备来确定焊接方案。

Note：This general guideline may not suitable for all PCB designs or configurations of all soldering equipment.The technique in practice is influenced by many factors,it should be specialized base on the PCB designs and configurations of the soldering equipment.

NEW OPTO

地址：惠州市仲恺高新区潼湖镇三和村和溪路 252 号联东 U 谷 9 号厂房
Add:Building 9, Liandong U Valley, No. 252 Hexi Road, Sanhe Village, Tonghu Town, Zhongkai High tech Zone, Huizhou City,China
电话(Tel):0752—7987222 网址(Web site):http//www.xycgd.com
传真(Fax):0752—7987000 邮箱(E-mail):xycgd888@163.com

使用注意事项 Precautions

感谢您使用惠州市鑫永诚光电科技有限公司的系列 LED 产品，为增进您对我司产品特性的了解，也为方便您快速掌握产品的基本操作，为尽量减少或避免因人为等因素造成不必要的产品损坏，使其能够更好的为您的生产服务，特针对使用过程中的一些规范使用作相应说明，同时即使是同一规格 LED，在实际应用领域其可靠性与整体系统设计水平、作业方式、使用条件均相关。本使用说明不可能涵盖客户使用过程中可能碰到的所有问题，由此带来的不便，敬请谅解！

Thanks for using relevant LED products of Huizhou Newpoto Optoelectronic Technology Co., Ltd. in order to enhance your understanding of the characteristics of our products, as far as possible to reduce or avoid unnecessary damage to the product due to human factors, and make it can better service your production. We give corresponding instructions, According to the characteristic in the process of standard use. At the same time, even if the same specifications LED, in the practical application field its reliability are related to overall system design level, mode of operation and conditions of use. This Instructions can't cover all questions may encounter during customer use process, We sincerely apologize for any inconvenience this may cause!

■ 产品声明

- 使用本产品之前，请贵司务必预先进行测试，以便确认是否适合使用目的，产品介绍的用途并不保证不抵触任何专利，有关 LED 产品的进出口法律责任应由客户担负，请预先查清每个国家或地区的有关规定。产品可能会因性能提升而更改物料和规格参数，恕不另行通知。

  In order to confirm the product is right for using purpose , pretest is necessary before use . We don’ t guarantee the product application introduction don’ t contravene any patent. The corresponding import and export legal responsibility should be taken by customers. Please verify relevant provision about the LED product in each country and district beforehand. We may change material and specifications from time to time in the interest of product development, without prior notification or public announcement.

■ 储存 Storage

- 本产使用密封防潮抗静电袋包装,并附有干燥剂,未开封的产品保存时间 2 个月。

  The products are stored in sealed anti-moisture and anti-static package with moisture absorbent.Unopened package can be stored 2 months.

- 开封前,产品须存放在温度不高于 30℃,湿度不高于 60%RH 的环境中。

  Before opening the package, the product should be kept at 30℃ or less and humidity less than 60%RH.

- 密封防静电袋内的湿度卡应在打开袋子后立即查看袋内的湿度指示卡来确定,湿度显示小于或等于 30%时,使用前须进行烘烤。

  Humidity of sealed anti-static bag is subject to the humidity value shows in humidity card at the moment opening the bag.If humidity shows equal or less than 30%,the products should be baked before use.

- 开封后,产品必须 24 小时内使用完(建议工作环境温度不高于 30℃,湿度不高于 60%),如未使用完,余料须存放在温度不高于 30℃,湿度不高于 10%的环境中。

  After opening the package, the product should be soldered within 24 hours. If not, please store at 30℃or less and humidity less than 10%RH. It is recommended that the product be operated at the workshop condition of 30℃ or less and humidity less than 60%RH.

- 对于尚未焊接的 LED,如果吸湿剂或包装失效,或者产品没有符合以上有效存储条件,烘烤可以起到一定的性能恢复效果. 烘烤条件:65±5℃,持续时间 24H。

  For the LED doesn’t solder ,if the moisture absorbent material lose efficacy or the storage condition doesn’t

NEW OPTO

conform to the above description,baking can help some extent performance recovery .Backing condition : 65±5℃ for 24 hours.

■ 静电 Static Electricity

以下操作可降低静电破坏的可能性。

The following operations may decrease the possibility of ESD damage。

- 将产品和外界之间的摩擦减到最低以避免静电产生。

  Minimize friction between the product and surroundings to avoid static .

- 所有的产品设备和测试仪器必须接地。

  All production machinery and test instruments must be grounded.

- 操作人员必须配戴静电环。

  Operators must wear anti-static bracelets.

- 进入带电设备工作区域时需穿防静电服。

  Wearing anti-static garment when entering into electric devices working areas.

- 所有操作 IC 和 ESD 敏感器件元器件的工作台必须保持低于 150V 的静电保护。

  All workstations that operate IC and ESD-sensitive components must maintain an electrostatic protection of 150V or less.

■ 温度保护 The safe temperature for LEDs working

- LED 在高温条件下，衰减会加速,本身应力也会增大，若长期处于高温环境下，极容易出现失效. 对于高密度排列使用的情况,建议在使用过程中灯面温度不超过 55℃， 灯脚温度不超过 75℃。

  The high temperature will make the LED's luminous intensity deceased radically.If LED worked in high temperature environment for a long time, it would lose efficacy easily. When LEDs are working in a closed array, it is suggested that the LED's surface temperature be lower than 55℃ and the pin's temperature be lower than75℃.

■ 其他事项 Others

- 请勿直接触摸或操作透镜表面，这可能会损坏内部的电路，拿取时用镊子或合适的工具夹在元件的侧边。

  Do not touch or operate the lens surface directly,it may damage the internal circuitry. Handle the component along the side surfaces by using tweezers or appropriate tools.

- LED 的底座部分相当脆弱，请勿用坚硬、尖锐的物体刮、擦封装树脂部分。在用镊子夹取的时候也应当小心注意。

  The base of LED is fragile,so please avoid scratch or friction over the epoxy resin surface.While handing the product with tweezers,do not hold by the epoxy resin,be careful.

NEWOPTO