WWW.XYECONN.COM

REV.	Q'TY	ECN. NO.	APR.	DATE

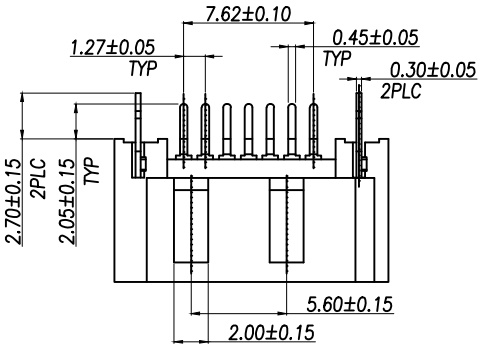

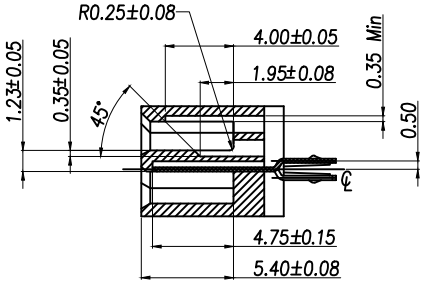

SECTION A–A

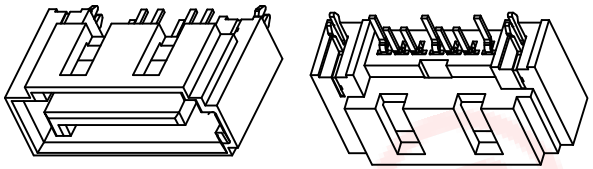

SPECIFICATION:

1.MATERIAL:

HOUSING: LCP 30% G/F UL 94V-0

COLOR:BLACK

CONTACT:BRASS C2680R-H,T=0.25mm

PEG: BRASS C2680R-H,T=0.30mm

2.FINISH:

CONTACT: 1u"~15u"GOLD/TIN PLATING ON CONTACT AREA

100u". TIN PLATING ON SOLDERTAILS

50u".NICKEL UNDERPLATING OVER ALL

PEG: 100u". TIN PLATING ON SOLDERTAILS

50u".NICKEL UNDERPLATING OVER ALL

3.SPECIFICATION:

RATING VOLTAGE:12V AC

RATING CURRENT:1.5AMP

CONTACT RESISTANCE:30mΩ MAX

INSULATION RESUSTANCE:1000MΩ MIN AT500V DC

WITHSTANDING VOLTAGE:AC 500V FOR 1 MINUTE

MATING FORCE:4.59KGF MAX(45N MAX)

EXTRACTION FORCE:1.02KGF MIN(10N MIN)

DURABILITY:500CYCLES

TEMPERATURE RANGE:-20℃ TO +85℃

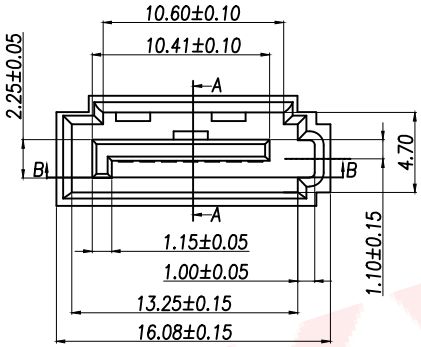

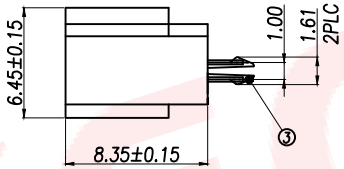

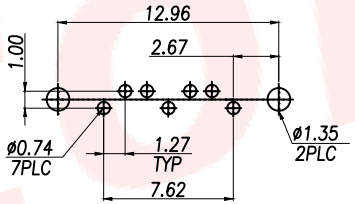

RECOMMEND PCB LAYOUT

PCB TOLERANCE:±0.05

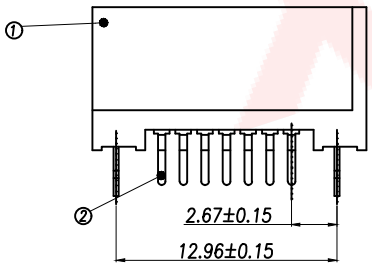

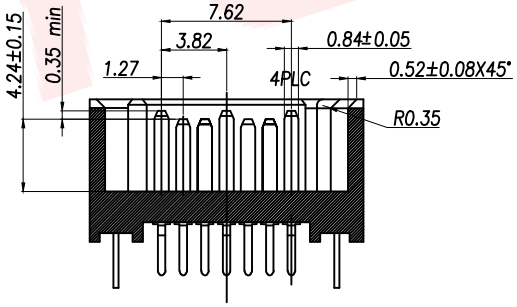

SECTION B–B

	环保要求	产品必须符合ROHS要求		
3	Peg	Brass C2680		Tin/Ni Plated
2	Terminal	Brass C2680		Gold/Tin Plated
1	Housing	High Temp	Black	UL 94V-0
NO.	DESCRIPTION	MATERIAL	COLOR	REMARK

DIMENSION IN mm		厦门市辛译精密电子有限公司 Xiamen XinYi Xyeconn Electronics Co.,Ltd			
TOLERANCE UNLESS OTHERWISE SPECIFIED					
.X:±0.30	.X°:±3°	APR. Alex	TITLE: SATA 7P公座A型全包开窗 针长2.05mm 单双侧插式		
.XX:±0.20	.XX°:±2°	CHK. Jack	DWG NO. XY-SATA-7ACC-01G		
			PROJ.	CUSTOMER DRAWING	
.XXX:±0.05	.XXX°:±0.5°	DRA. Can	SIZE A4	SCALE 1:1	SHEET 1/1 REV. A

F-RD-18A