WWW.XYECONN.COM

REV.	Q'TY	ECN. NO.	APR.	DATE

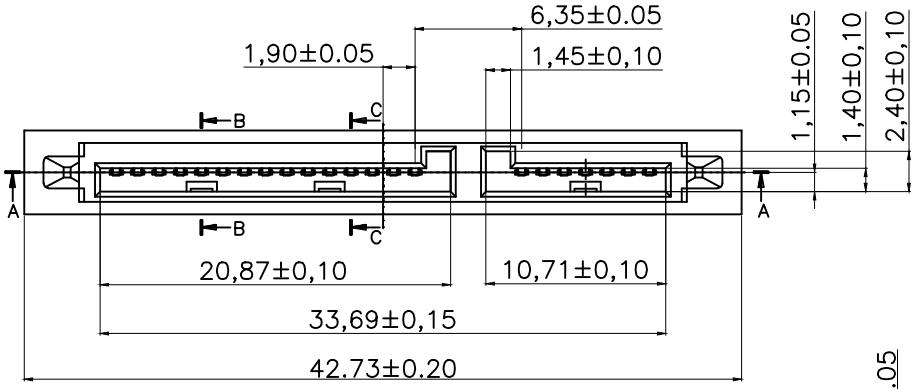

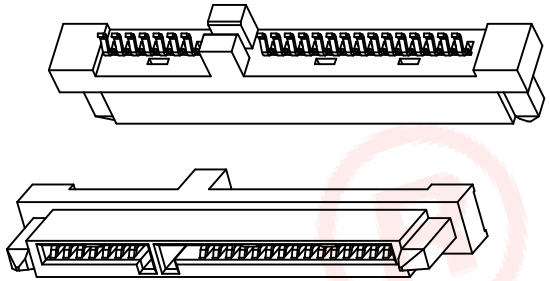

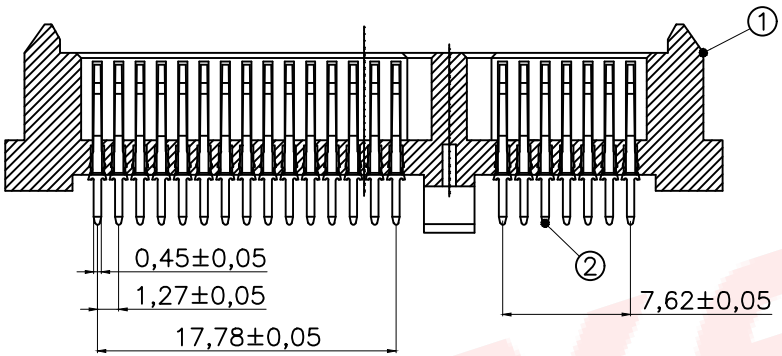

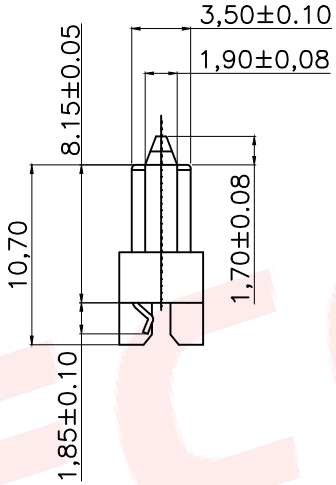

SPECIFICATION:
1.MATERIAL:
HOUSING: LCP 30%G/F UL 94V-0
COLOR:BLACK
CONTACT: PHOSPHOR BRONZE C5191R-H,T=0.25mm
2.FINISH:
CONTACT:1u"GOLD PLATING ON CONTACT AREA
100u" TIN PLATING ON SOLDERTAILS
30u" NICKEL UNDERPLATING OVER ALL

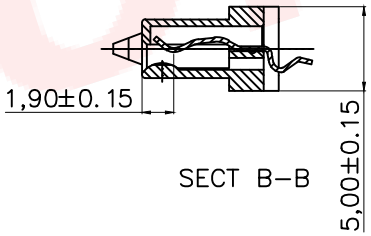

SECT B-B

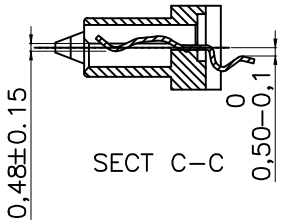

SECT C-C

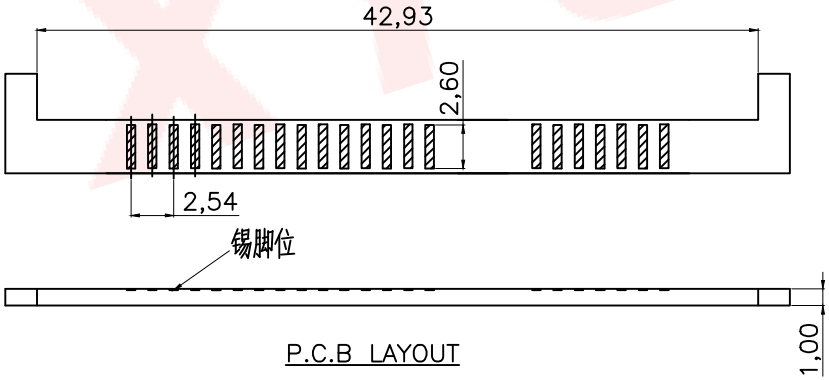

P.C.B LAYOUT

	环保要求	产品必须符合ROHS要求		
2	Terminal	Pho.Bronze C5191R-H		Gold/Tin Plated
1	Housing	High Temp	Black	UL 94V-0
NO.	DESCRIPTION	MATERIAL	COLOR	REMARK

DIMENSION IN mm		厦门市辛译精密电子有限公司 Xiamen XinYi Xyeconn Electronics Co.,Ltd	
TOLERANCE UNLESS OTHERWISE SPECIFIED			
.X:±0.30	.X°:±3°	APR. Alex	TITLE: SATA 7+15P 单排脚 中间扣板1.00 平口
.XX:±0.20	.XX°:±2°	CHK. Jack	DWG NO. XY-SATA-22BCC-12M
.XXX:±0.05	.XXX°:±0.5°	DRA. Can	PROJ. CUSTOMER DRAWING
			SIZE A4 SCALE 1:1 SHEET REV. A

F-RD-18A