WWW.XYECONN.COM

REV.	Q'TY	ECN. NO.	APR.	DATE

NOTES:
1.MATERIAL:
HOUSING:LCP 30% G/F UL94V-0
COLOR:BLACK
CONTACT:BRASS T=0.25mm
2.FINISH:
CONTACT:GOLD FLASH PLATING ON CONTACT AREA
100u"MIN.TIN PLATING ON SOLDERTAILS
50u"MIN.NICKEL UNDERPLATING OVER ALL
BOARD LOCK:100u"MIN.TIN PLATING ON SOLDERTAILS
50u"MIN.NICKEL UNDERPLATING OVEER ALL
3.ELECTRICAL:
CURRENT RATING:1.5 AMPERE PER CONTACT
CONTACT RESISTANCE:30 mΩ MAX
INSULATION RESISTANCE:1000 MΩ MIN
DIELECTRIC WITH STANDING VOVTAGE:500 VDC
OPERATING TEMPERATURE: -40°C ~ +85°C

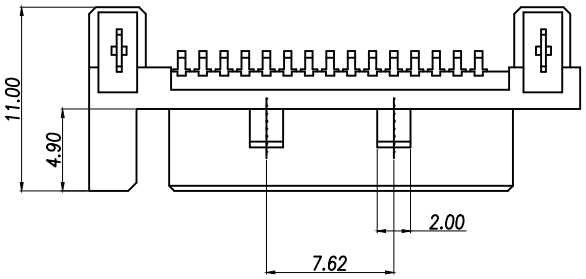

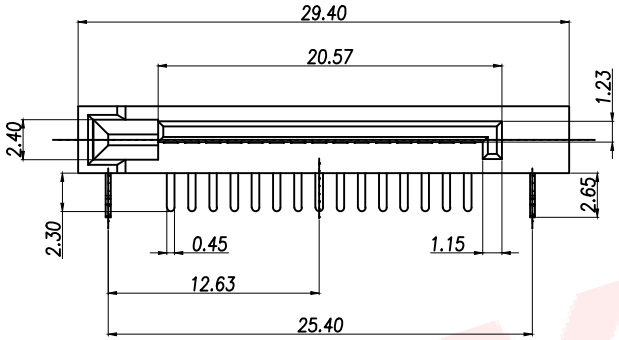

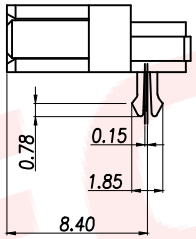

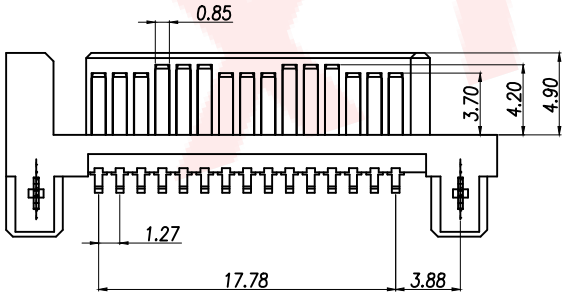

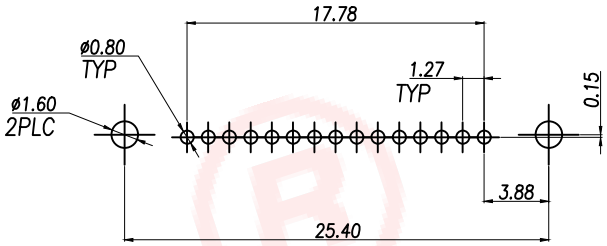

RECOMMEND PCB LAYOUT
PCB TOLERANCE:±0.05

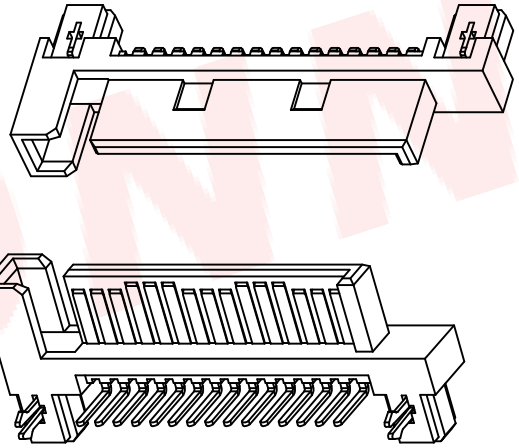

	环保要求	产品必须符合ROHS要求		
3	Peg	Brass C2680		Tin/Ni Plated
2	Terminal	Brass C2680		Gold/Tin Plated
1	Housing	High Temp	Black	UL 94V-0
NO.	DESCRIPTION	MATERIAL	COLOR	REMARK

DIMENSION IN mm		厦门市辛译精密电子有限公司 Xiamen XinYi Xyeconn Electronics Co.,Ltd			
TOLERANCE UNLESS OTHERWISE SPECIFIED					
.X:±0.30	.X°:±3°	APR. Alex	TITLE: SATA 15P公座90度DIP型带鱼叉针长2.30mm		
.XX:±0.20	.XX°:±2°	CHK. Jack	DWG NO. XY-SATA-15BWC-01G		
			PROJ.	CUSTOMER DRAWING	
.XXX:±0.05	.XXX°:±0.5°	DRA. Can	SIZE A4	SCALE 1:1	SHEET 1/1 REV. A

F-RD-18A