WWW.XYECONN.COM

REV.	Q'TY	ECN. NO.	APR.	DATE

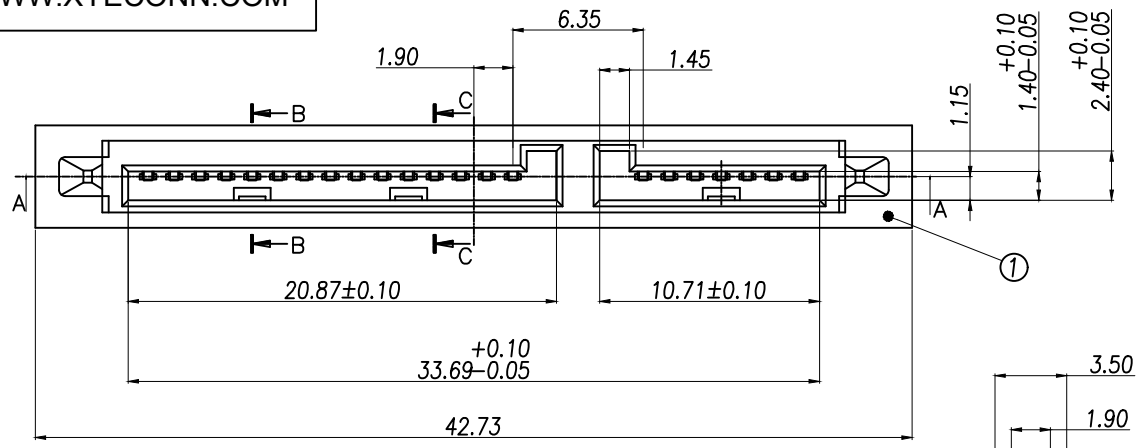

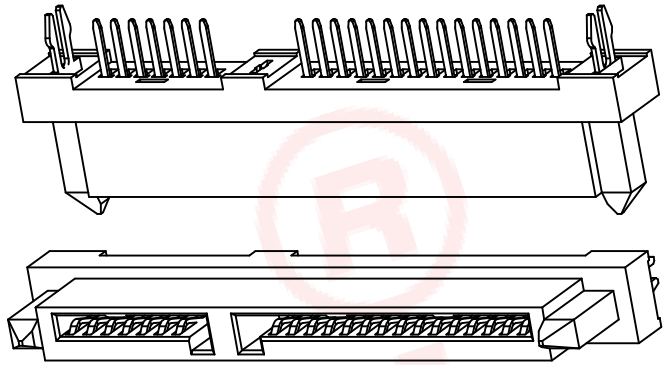

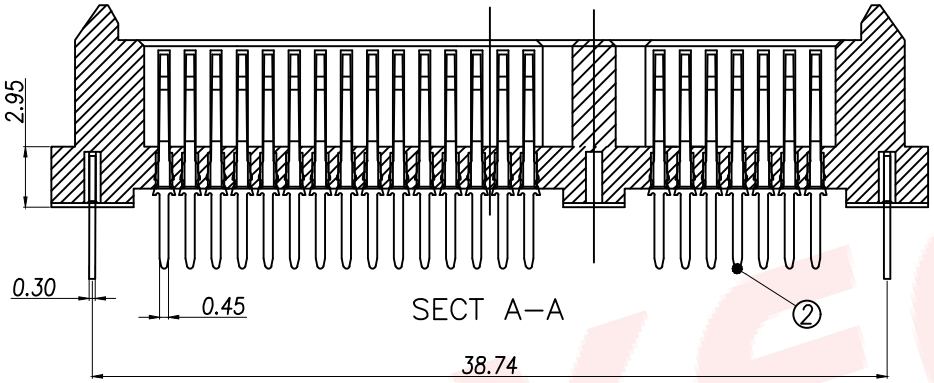

SECT A−A

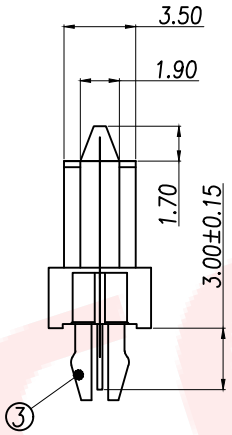

SPECIFICATION:
1.MATERIAL:
HOUSING: LCP 30% G/F UL 94V−0
COLOR:BLACK
CONTACT: PHOSPHOR BRONZE C5191R−H,T=0.25mm
PEG: BRASS C2680R−H,T=0.30mm
2.FINISH:
CONTACT:1u"/3u"/5u"/15u" GOLD PLATING ON CONTACT AREA
100u" TIN PLATING ON SOLDERTAILS
30u" NICKEL UNDERPLATING OVER ALL
PEG:100u" TIN PLATING ON SOLDERTAILS
30u" NICKEL UNDERPLATING OVER ALL

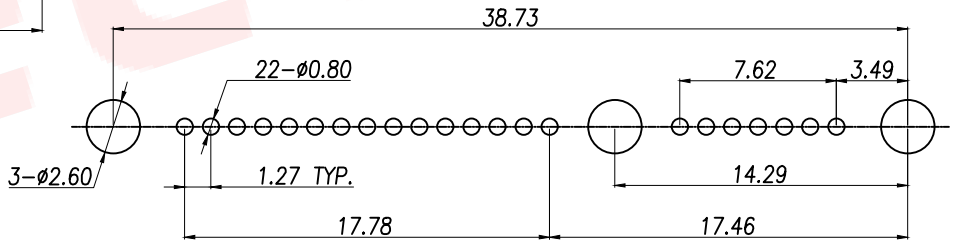

P.C.B LAYOUT

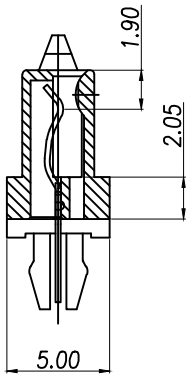

SECT B−B

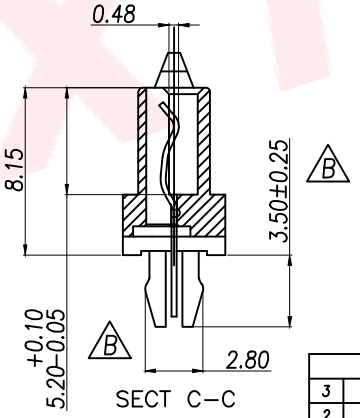

SECT C−C

NO.	DESCRIPTION	MATERIAL	COLOR	REMARK
3	Peg	Brass C2680R		Tin/Ni Plated
2	Terminal	Pho.Bronze C5191		Gold/Tin Plated
1	Housing	High Temp	Black	UL 94V−0

DIMENSION IN mm		厦门市辛译精密电子有限公司 Xiamen XinYi Xyeconn Electronics Co.,Ltd	
TOLERANCE UNLESS OTHERWISE SPECIFIED			
.X:±0.30	.X°:±3°	APR. Alex	TITLE: SATA 7+15P 单排脚 直立式180°(欧盟款)
.XX:±0.20	.XX°:±2°	CHK. Jack	DWG NO. XY−SATA−22BZC−11M
.XXX:±0.05	.XXX°:±0.5°	DRA. Can	PROJ. CUSTOMER DRAWING
			SIZE A4 SCALE 1:1 SHEET 1/1 REV. A

F−RD−18A