WWW.XYECONN.COM

REV.	Q'TY	ECN. NO.	APR.	DATE

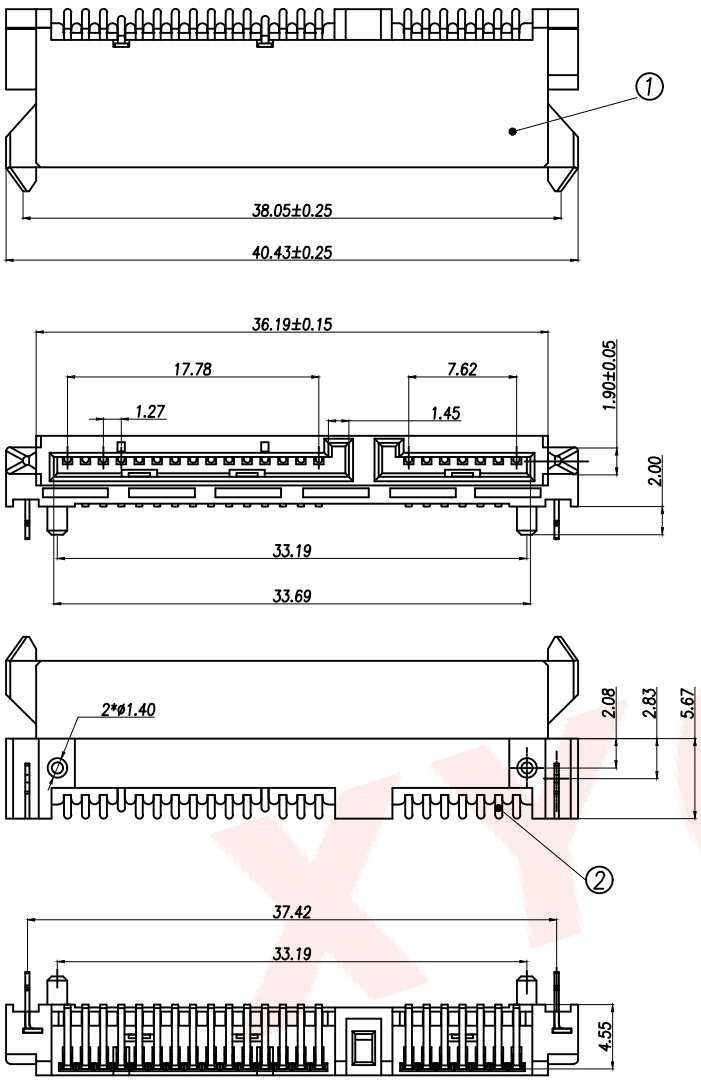

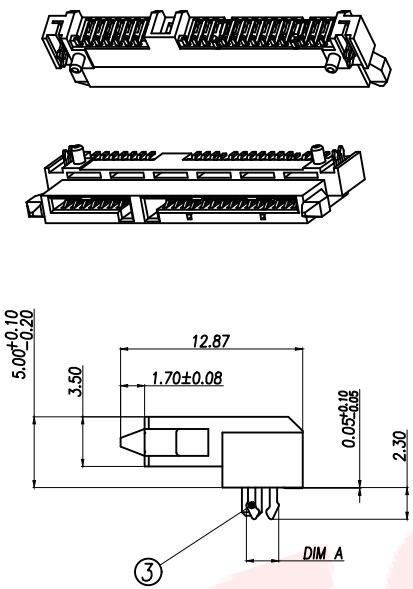

SPECIFICATION:

1.MATERIAL:

HOUSING:LCP UL 94V-0

COLOR:BLACK

CONTACT:PHOSPHOR BRONZE C5191R-H,T=0.25mm

PEG:BRASS C2680R-H,T=0.30mm

2.FINISH:

CONTACT:1u"/3u"/5u"/15u" GOLD PLATING ON CONTACT AREA

100u" TIN PLATING ON SOLDERTAILS

30u" NICKEL UNDERPLATING OVER ALL

PEG:100u" TIN PLATING ON SOLDERTAILS

30u" NICKEL UNDERPLATING OVER ALL

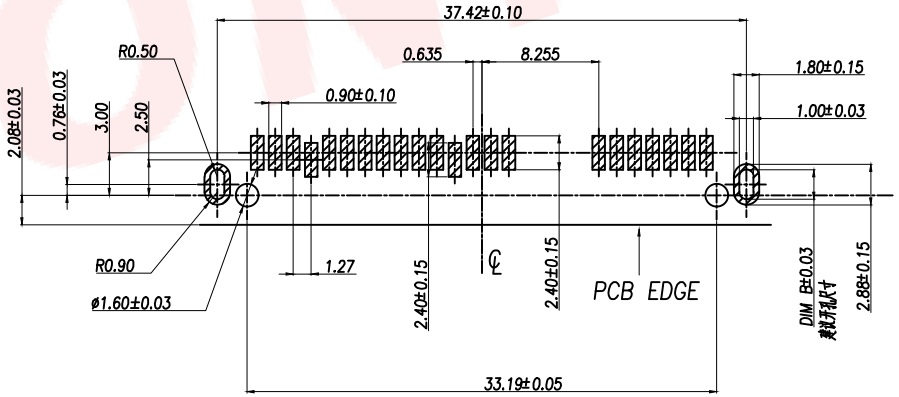

RECOMMEND PCB LAYOUT (T=1.2)

PCB TOLERANCE:±0.05

	材料要求	产品必须符合ROHS要求		
3	Peg	Brass C2680R-H		Tin/Ni Plated
2	Terminal	Pho.Bronze C5191R-H		Gold/Tin Plated
1	Housing	High Temp	Black	UL 94V-0
NO.	DESCRIPTION	MATERIAL	COLOR	REMARK

DIMENSION IN mm		厦门市辛译精密电子有限公司 Xiamen XinYi Xyeconn Electronics Co.,Ltd			
TOLERANCE UNLESS OTHERWISE SPECIFIED					
.X:±0.30	.X°:±3°	APR. Alex	TITLE: SATA 7+15P 母座 SMT H:5.00 板上型		
.XX:±0.20	.XX°:±2°	CHK. Jack	DWG NO. XY-SATA-22BWT-09M		
			PROJ.	CUSTOMER DRAWING	
.XXX:±0.05	.XXX°:±0.5°	DRA. Can	SIZE A4	SCALE 1:1	SHEET 1/1 REV. A

F-RD-18A