HT71xx(18V) High Voltage Regulator

1. General Description

1.1 Description

The HT71xx series is a set of three-terminal low power high voltage regulators implemented in CMOS technology. They allow input voltages as high as 15V. They are available with several fixed output voltages ranging from 3.0V to 5.0V. CMOS technology ensures low voltage drop and low quiescent current.

Although designed primarily as fixed voltage regulators, these devices can be used with ex-ternal components to obtain variable voltages and currents.

1.2 Features

- High input voltage (up to 15V)
- Ultra low quiescent current: 2.0μA (typ.)
- Low temperature coefficient
- Output voltage accuracy: tolerance ±3%
- Package form:SOT23-3,SOT89-3,TO92

1.3 Device Information

PART NUMBER	INPUT VOLTAGE (MAX)(V)	OUTPUT (V)	PACKAGE
HT7130	15	3.0	SOT23 SOT89 TO92
HT7133	15	3.3	
HT7136	15	3.6	
HT7140	15	4.0	
HT7144	15	4.4	
HT7150	15	5.0	

1.4 Applications

- Battery-powered equipment
- Communication equipment
- Audio/Video equipment

2. Package Form and Pin Function Definition

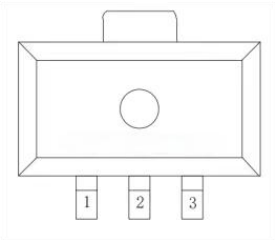

SOT89-3

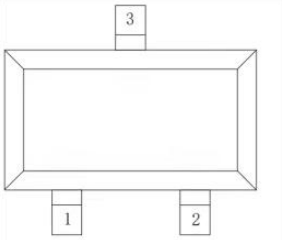

SOT23-3

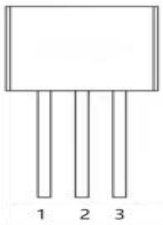

TO92

Figure 2.1 Top View

PIN No.			NAME	I/O	FUNCTION
SOT23-3	SOT89-3	TO92			
1	1	1	GND	-	Ground
3	2	2	VIN	-	Supply Voltage
2	3	3	VOUT	O	Output

3. System Diagram

3.1 Functional Block Diagram

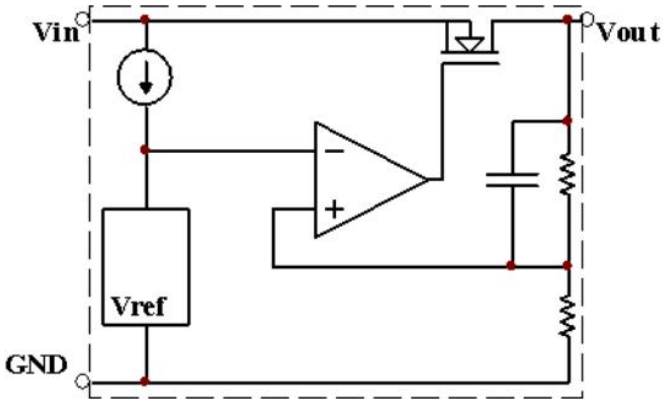

Figure 3.1 HT71xx Functional Block Diagram

4. Specifications

4.1 Absolute Maximum Ratings

Symbol	Parameter	MIN	MAX	Unit
V_{IN}	Supply Voltage Range	-0.5	18	V
T_J	Junction Temperature		125	℃
T_{OP}	Operating Temperature	-40	85	℃

Absolute maximum ratings are those values beyond which the device could be permanently damaged, These are stress ratings only,which do not imply functional operation of the device at these or any other conditions beyond those indicated under Recommended Operating Conditions.

4.2 Electrical Characteristics

(T_a=25℃, voltages are referenced to GND, unless otherwise specified)

Symbol	Parameter	Test Condition	MIN	TYP	MAX	Unit
HT7130						
V_{OUT}	Output Voltage	V_{IN}=5V, I_{OUT}=1mA	2.91	3.0	3.09	V
I_{OUT}	Output Current	V_{IN}=4.6V, V_{OUT}≥ 2.7V	100	--	--	mA
ΔV_{OUT}	Load Regulation	V_{IN}=4.6V,1mA≤I_{OUT} ≤50mA	--	10	100	mV
V_{DIF}	Drop Voltage	I_{OUT}=10mA	--	110	--	mV
I_{SS}	Quiescent Current	V_{IN}=15V, No Load	--	2	5	uA
$\Delta V_{OUT}/(\Delta V_{IN} * V_{OUT})$	Line Regulation	4.6V≤V_{IN}≤15V， I_{OUT}=10mA	--	0.4	--	%/V
V_{IN}	Input Voltage	--	--	--	15	V
$\Delta V_{OUT} / \Delta T_a$	Temperature Coefficient	V_{IN}=6V, I_{OUT}=1mA -40℃≤T_a≤85℃	--	±0.1	--	mV/℃

Symbol	Parameter	Test Condition	MIN	TYP	MAX	Unit
HT7133						
V_{OUT}	Output Voltage	V_{IN}=5V, I_{OUT}=1mA	3.201	3.3	3.399	V
I_{OUT}	Output Current	V_{IN}=4.9V, V_{OUT}≥2.97V	100	--	--	mA
ΔV_{OUT}	Load Regulation	V_{IN}=4.9V,1mA≤I_{OUT} ≤50mA	--	10	100	mV
V_{DIF}	Drop Voltage	I_{OUT}=10mA	--	100	--	mV
I_{SS}	Quiescent Current	V_{IN}=15V, No Load	--	2	5	uA
$\Delta V_{OUT}/(\Delta V_{IN} * V_{OUT})$	Line Regulation	4.9V≤V_{IN}≤15V， I_{OUT}=10mA	--	0.4	--	%/V
V_{IN}	Input Voltage	--	--	--	15	V
$\Delta V_{OUT}/\Delta T_a$	Temperature Coefficient	V_{IN}=6V, I_{OUT}=1mA -40℃≤T_a≤85℃	--	±0.1	--	mV/℃
HT7136						
V_{OUT}	Output Voltage	V_{IN}=5V, I_{OUT}=1mA	3.492	3.6	3.708	V
I_{OUT}	Output Current	V_{IN}=5.2V, V_{OUT}≥3.24V	100	--	--	mA
ΔV_{OUT}	Load Regulation	V_{IN}=5.2V,1mA≤I_{OUT} ≤50mA	--	10	100	mV
V_{DIF}	Drop Voltage	I_{OUT}=10mA	--	100	--	mV
I_{SS}	Quiescent Current	V_{IN}=15V, No Load	--	2	5	uA
$\Delta V_{OUT}/(\Delta V_{IN} * V_{OUT})$	Line Regulation	5.2V≤V_{IN}≤15V， I_{OUT}=10mA	--	0.4	--	%/V
V_{IN}	Input Voltage	--	--	--	15	V
$\Delta V_{OUT}/\Delta T_a$	Temperature Coefficient	V_{IN}=6V, I_{OUT}=1mA -40℃≤T_a≤85℃	--	±0.1	--	mV/℃
HT7140						
V_{OUT}	Output Voltage	V_{IN}=6.5V, I_{OUT}=1mA	3.88	4.0	4.12	V
I_{OUT}	Output Current	V_{IN}=5.6V, V_{OUT}≥3.6V	100	--	--	mA
ΔV_{OUT}	Load Regulation	V_{IN}=5.6V,1mA≤I_{OUT} ≤50mA	--	10	100	mV
V_{DIF}	Drop Voltage	I_{OUT}=10mA	--	90	--	mV
I_{SS}	Quiescent Current	V_{IN}=15V, No Load	--	2	5	uA
$\Delta V_{OUT}/(\Delta V_{IN} * V_{OUT})$	Line Regulation	5.6V≤V_{IN}≤15V， I_{OUT}=10mA	--	0.4	--	%/V
V_{IN}	Input Voltage	--	--	--	15	V
$\Delta V_{OUT}/\Delta T_a$	Temperature Coefficient	V_{IN}=6V, I_{OUT}=1mA -40℃≤T_a≤85℃	--	±0.1	--	mV/℃
HT7144						
V_{OUT}	Output Voltage	V_{IN}=6.5V, I_{OUT}=1mA	4.268	4.4	4.532	V
I_{OUT}	Output Current	V_{IN}=6V, V_{OUT}≥3.96V	100	--	--	mA
ΔV_{OUT}	Load Regulation	V_{IN}=6V,1mA≤I_{OUT} ≤50mA	--	10	100	mV
V_{DIF}	Drop Voltage	I_{OUT}=10mA	--	80	--	mV
I_{SS}	Quiescent Current	V_{IN}=15V, No Load	--	2	5	uA
$\Delta V_{OUT}/(\Delta V_{IN} * V_{OUT})$	Line Regulation	6V≤V_{IN}≤15V， I_{OUT}=10mA	--	0.5	--	%/V
V_{IN}	Input Voltage	--	--	--	15	V
$\Delta V_{OUT}/\Delta T_a$	Temperature Coefficient	V_{IN}=6V, I_{OUT}=1mA -40℃≤T_a≤85℃	--	±0.1	--	mV/℃

Symbol	Parameter	Test Condition	MIN	TYP	MAX	Unit
HT7150						
V_{OUT}	Output Voltage	V_{IN}=6.5V, I_{OUT}=1mA	4.85	5.0	5.15	V
I_{OUT}	Output Current	V_{IN}=6.5V, V_{OUT}≥4.5V	100	--	--	mA
ΔV_{OUT}	Load Regulation	V_{IN}=6.5V,1mA≤I_{OUT} ≤50mA	--	10	100	mV
V_{DIF}	Drop Voltage	I_{OUT}=10mA	--	70	--	mV
I_{SS}	Quiescent Current	V_{IN}=15V, No Load	--	2	5	uA
$\Delta V_{OUT}/(\Delta V_{IN} * V_{OUT})$	Line Regulation	6V≤V_{IN}≤15V， I_{OUT}=1mA	--	0.6	--	%/V
V_{IN}	Input Voltage	--	--	--	25	V
$\Delta V_{OUT} / \Delta T_a$	Temperature Coefficient	V_{IN}=6V, I_{OUT}=1mA -40℃≤T_a≤85℃	--	±0.1	--	mV/℃

Note: $V_{DIF} = V_{IN2} - V_{OUT2}$,$V_{IN2}=V_{IN}$@($V_{OUT}=V_{OUT2}$),$V_{OUT2}=V_{OUT1}$*98%,$V_{OUT1}=V_{OUT}$@($V_{IN1}=V_{OUT}$+1V,Load=$I_{OUT}$)

5. Typical Application

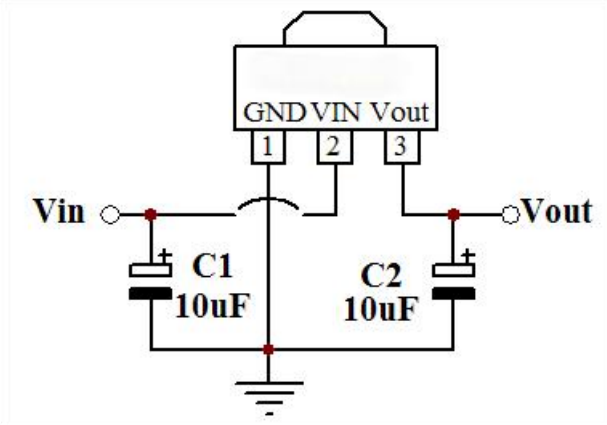

6. Ordering Information

Orderable Device	Package Type	Pins	Packing	Package Qty
HT71xxS(18V)	SOT23	3	Tape & Reel	3000
HT71xx-1(18V)	SOT89	3	Tape & Reel	1000
HT71xxKW03ABAQ	TO92	3	Bag	1000

7. Package Information

7.1 SOT23-3

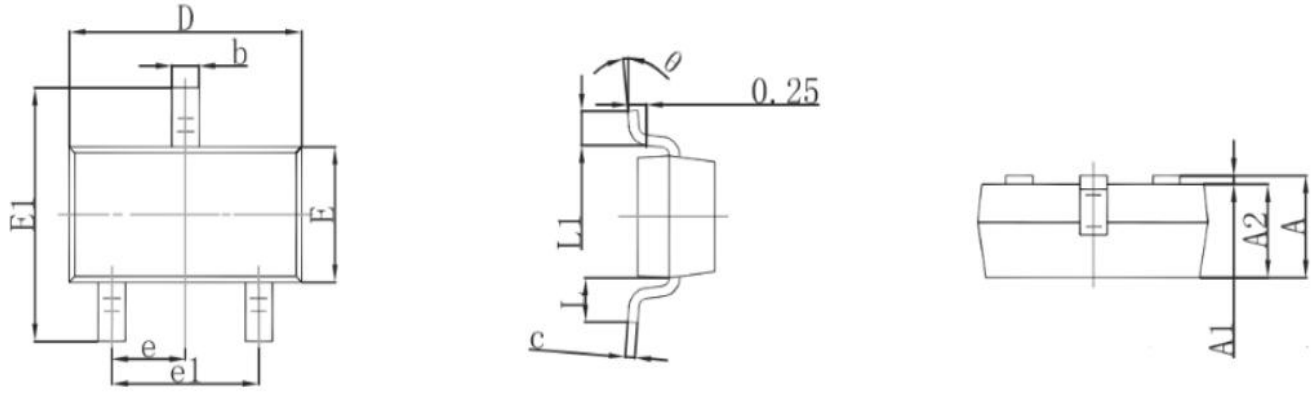

Symbol	Dimensions In Millimeters		Dimensions In Inches	
	Min	Max	Min	Max
A	0.900	1.150	0.035	0.045
A1	0.000	0.100	0.000	0.004
A2	0.900	1.050	0.035	0.041
b	0.300	0.500	0.012	0.020
c	0.080	0.150	0.003	0.006
D	2.800	3.000	0.110	0.118
E	1.200	1.400	0.047	0.055
E1	2.250	2.550	0.089	0.100
e	0.950 TYP		0.037 TYP	
e1	1.800	2.000	0.071	0.079
L	0.550 REF		0.022 REF	
L1	0.300	0.500	0.012	0.020
θ	0°	8°	0°	8°

7.2 SOT89-3

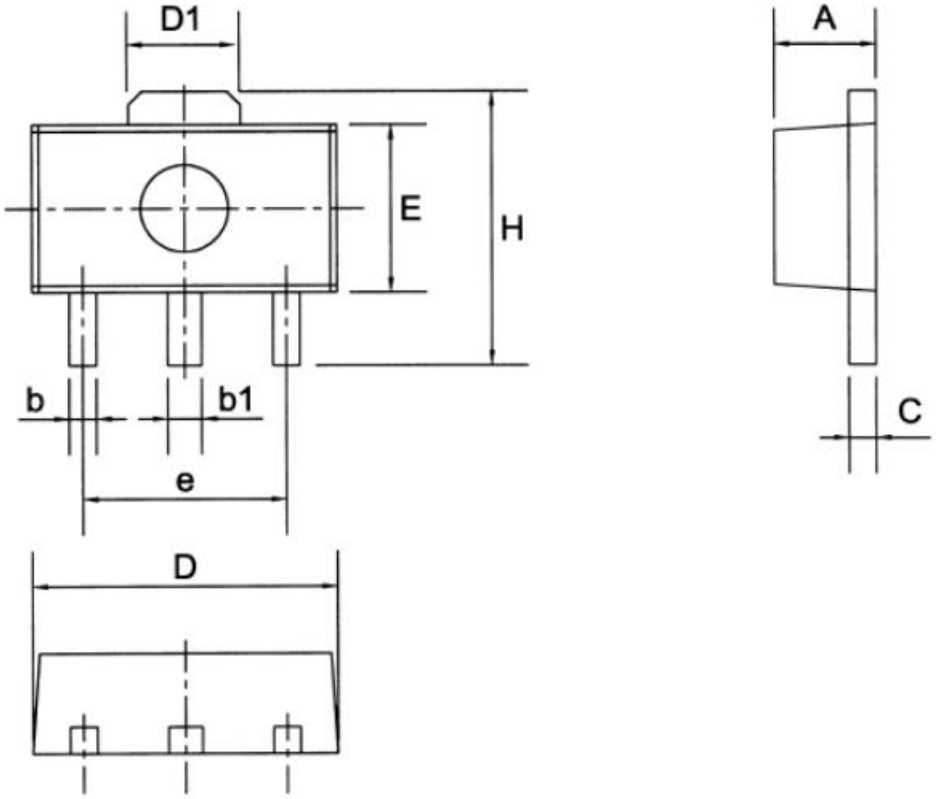

Symbol	Dimensions In Millmeters			Dimensions In Inches		
	Min	Nom	Max	Min	Nom	Max
A	1.30	1.50	1.70	0.051	0.059	0.067
b	0.25	0.40	0.55	0.010	0.016	0.022
b1	0.40	0.50	0.60	0.016	0.020	0.024
C	0.30	0.40	0.50	0.012	0.016	0.020
D	4.30	4.50	4.70	0.169	0.177	0.185
D1	1.45	1.65	1.85	0.057	0.065	0.073
E	2.30	2.50	2.70	0.091	0.098	0.106
e	2.90	3.00	3.10	0.114	0.118	0.122
H	3.90	4.10	4.30	0.154	0.161	0.169

7.3 TO92

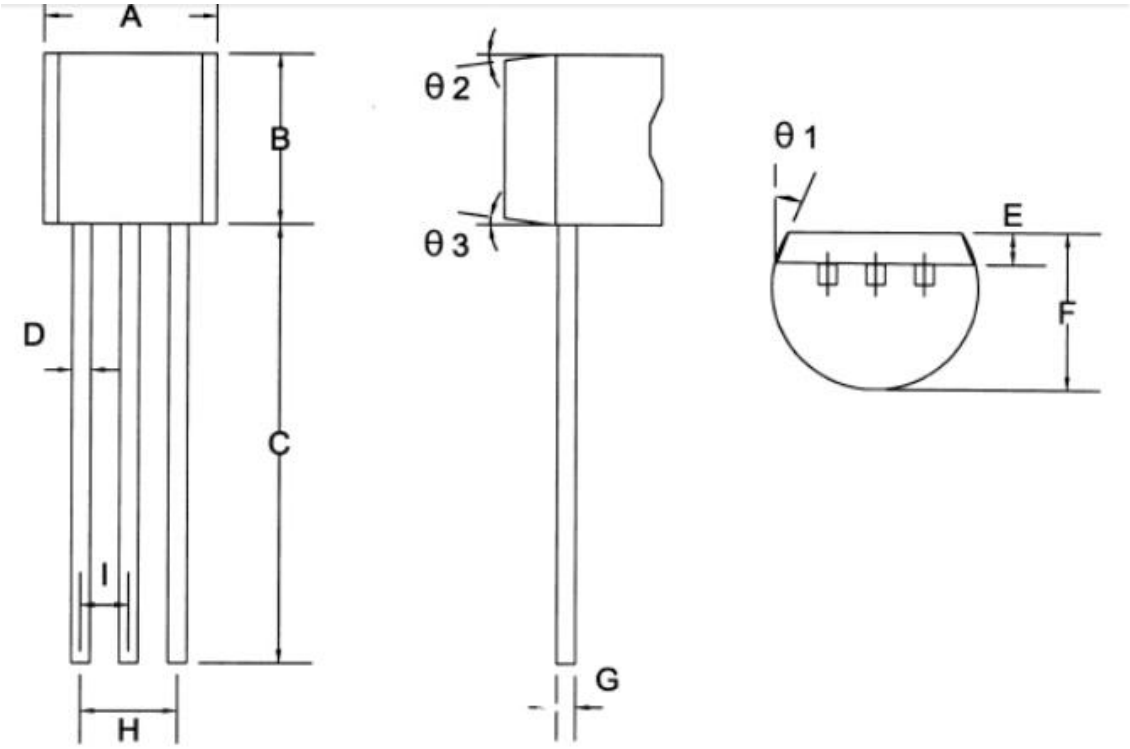

Symbol	Dimensions In Millmeters			Dimensions In Inches		
	Min	Nom	Max	Min	Nom	Max
A	4.33	4.58	4.83	0.170	0.180	0.190
B	4.33	4.58	4.83	0.170	0.180	0.190
C	14.07	14.47	14.87	0.554	0.570	0.585
D	0.34	0.44	0.54	0.013	0.017	0.021
E	0.92	1.02	1.12	0.036	0.040	0.044
F	3.36	3.56	3.76	0.132	0.140	0.148
G	0.34	0.44	0.54	0.013	0.017	0.021
H	2.42	2.54	2.66	0.095	0.100	0.105
I	1.15	1.27	1.39	0.045	0.050	0.055
θ1	—	5°	—	—	5°	—
θ2	—	2°	—	—	2°	—
θ3	—	2°	—	—	2°	—