华橙电子（惠州）有限公司

承 认 书
APPROVAL SHEET

客户名称 CUSTOMER	
产品名称 PART NAME	常规厚膜片式电阻器 General Thick Film Chip Resistors
产品规格 SPECIFICATION	HRC 0201~2512 TYPE
承认书编号 APPROVAL SHEET NO.	HCD-JS-001 V1.1
发出日期 ISSUE DATE	

制造商 MANUFACTURER			客户 CUSTOMER		
制定 PREPARED	审核 CHECKED	核准 APPROVED	确认 CONFIRMED	审核 CHECKED	核准 APPROVED

华橙电子（惠州）有限公司
地址：惠州市博罗县龙溪街道秋叶原路 82 号

1. 范围 Scope

本规格书适用于HRC Series系列常规厚膜片式电阻器

This specification is applied to the HRC Series for General thick film chip resistors

2. 特点 Features

- 小型化，重量轻 Small size and light weight
- 高稳定性，高可靠性High stable electrical capability, high reliability
- 100%CCD筛选，外观尺寸均匀度高100% CCD sorting, High uniform appearance
- 编带包装，散装可与各种自动贴标设备匹配Tape or bulk packaging can be matched automatic SMT equipment
- 适用于波峰焊和回流焊Suitable for both wave & reflow soldering
- 符合RoHS指令和无卤素要求Complaint with RoHS directive and Halogen free requirement

3. 品名组成介绍Part Number Explanation

EX：HRC0805F4701FNTN（0805 ±1% 4K70）

第1~3码	第4~7码	第8码	第9~12码	第13码	第14码	第15码	第16码
HRC	0805	F	4701	F	N	T	N
产品代码 Product type HRC：常规厚膜片式电阻器	型别代码 Type code 0201 0402 0603 0805 1206 1210 1812 2010 2512	阻值公差代码 Resistance tolerance J:±5% F:±1%	阻值代码 Resistance 3位数+空格5（E-24 5%）： Example： 102=1KΩ 472=4.7KΩ 4位数（E-24+E-96 1%）： Example： 1001=1KΩ 4701=4.7KΩ	额定功率代码 Power Rating at 70℃ C:1/20W D:1/16W E:1/10W F:1/8W H:1/4W J:1/2W K:3/4W L:1W	温漂代码 TCR （PPM/℃） N：Based on spec.	包装方式代码 Packaging T:7″ Reel& Taping A:13″ Reel&Taping B:Bulk	特殊代码 Special Code N:正常丝印 Normal marking O:无丝印No Marking D:阻值与丝印不一致

4. 结构图Construction

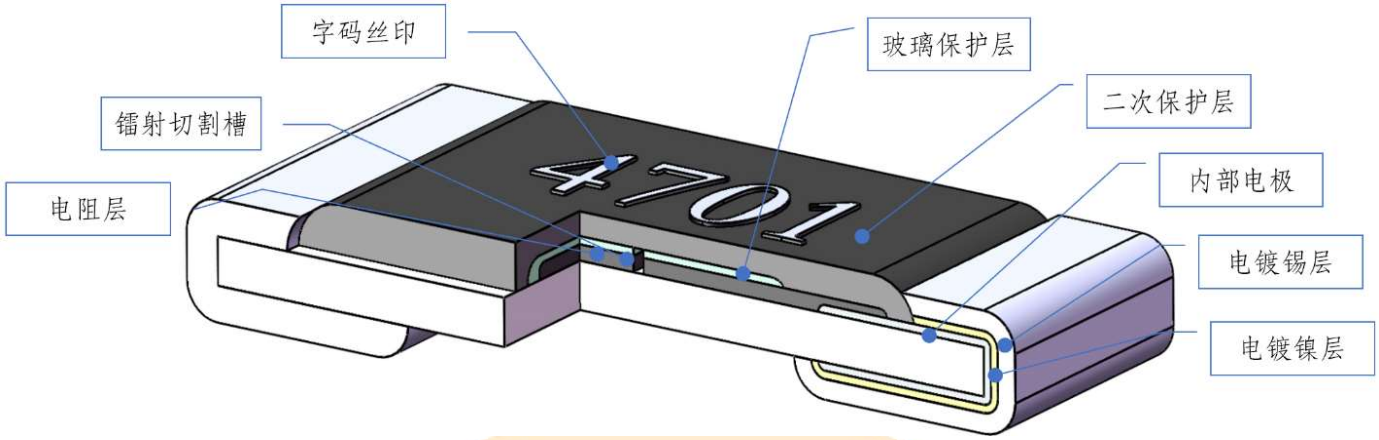

5. 外形尺寸 Dimension

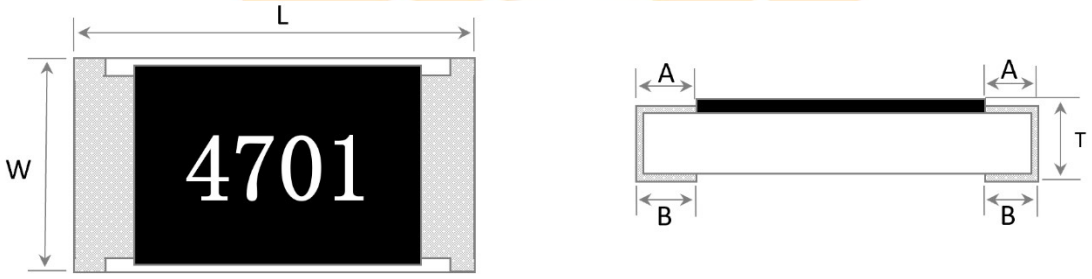

英制 (inch)	公制 (mm)	L (mm)	W (mm)	T (mm)	A (mm)	B (mm)
0201	0603	0.60 ± 0.05	0.30 ± 0.05	0.23 ± 0.05	0.10 ± 0.05	0.15 ± 0.05
0402	1005	1.00 ± 0.10	0.50 ± 0.10	0.35 ± 0.05	0.20 ± 0.10	0.20 ± 0.10
0603	1608	1.60 ± 0.15	0.80 ± 0.15	0.45 ± 0.10	0.30 ± 0.15	0.30 ± 0.15
0805	2012	2.00 ± 0.20	1.25 ± 0.15	0.50 ± 0.10	0.40 ± 0.15	0.40 ± 0.15
1206	3216	3.10 ± 0.20	1.60 ± 0.15	0.55 ± 0.10	0.50 ± 0.20	0.45 ± 0.20
1210	3225	3.10 ± 0.20	2.50 ± 0.15	0.55 ± 0.10	0.50 ± 0.20	0.50 ± 0.20
1812	4532	4.50 ± 0.20	3.10 ± 0.20	0.55 ± 0.10	0.55 ± 0.20	0.70 ± 0.20
2010	5025	5.00 ± 0.20	2.50 ± 0.20	0.55 ± 0.10	0.60 ± 0.20	0.60 ± 0.20
2512	6432	6.40 ± 0.20	3.20 ± 0.20	0.55 ± 0.10	0.60 ± 0.20	0.70 ± 0.20

6. 额定值Ratings &Characteristics

型别 Type	额定功率 (Power Rating at 70℃)	最大工作电压 Max. Working Voltage	最大过负荷电压 Max. Overload Voltage	阻值公差 Resistance Tolerance	阻值范围 Resistance Range E24&E96	温度系数 T.C.R. (PPM/℃)	0R阻值范围 Jumper Resistance Range	0R最大额定电流 Jumper Rated Current
0201	1/20W	25V	50V	±5% ±2% ±1%	1R~10R 10R~100R 100R~10M	±600 ±200 ±200	5% ≤50mΩ 1% ≤30mΩ	0.5A
0402	1/16W	50V	100V	±5% ±2% ±1%	1R~10R 10R~100R 100R~10M	±500 ±200 ±100	5% ≤50mΩ 1% ≤30mΩ	1A
0603	1/10W	50V	100V	±5% ±2% ±1%	1R~10R 10R~100R 100R~10M	±400 ±200 ±100	5% ≤50mΩ 1% ≤30mΩ	1A
0805	1/8W	150V	300V	±5% ±2% ±1%	1R~10R 10R~100R 100R~10M	±400 ±150 ±100	5% ≤50mΩ 1% ≤30mΩ	2A
1206	1/4W	200V	400V	±5% ±2% ±1%	1R~10R 10R~100R 100R~10M	±400 ±150 ±100	5% ≤50mΩ 1% ≤30mΩ	2A
1210	1/2W	200V	400V	±5% ±2% ±1%	1R~10R 10R~100R 100R~10M	±400 ±150 ±100	5% ≤50mΩ 1% ≤30mΩ	2A
1812	3/4W	200V	400V	±5% ±2% ±1%	1R~10R 10R~100R 100R~10M	±400 ±150 ±100	5% ≤50mΩ 1% ≤30mΩ	2A
2010	3/4W	200V	400V	±5% ±2% ±1%	1R~10R 10R~100R 100R~10M	±400 ±150 ±100	5% ≤50mΩ 1% ≤30mΩ	2A
2512	1W	200V	400V	±5% ±2% ±1%	1R~10R 10R~100R 100R~10M	±400 ±150 ±100	5% ≤50mΩ 1% ≤30mΩ	2A
使用温度范围 (Operating Temperature Range)				-55℃~+155℃ (0201:-55℃~+125℃)				

备注：额定工作电压（RCWV）根据电阻按公式V=√(P*R)计算（P为额定功率，R为电阻值），或者采用上面提供的最大工作电压，选取两者中的最小值。

The rated voltage is calculated by the formula V=√(P*R) (P: Rated Power, R: Resistance), or use the above max working voltage, whichever is lower.

7. 负荷下降特性曲线Derating Curve

当电阻使用之环境温度超过70℃时，应按照下图负荷下降特性曲线，减小额定功率。

For resistors operated in ambient over 70℃, rated load (rated power) shall be derated in accordance with the below figure.

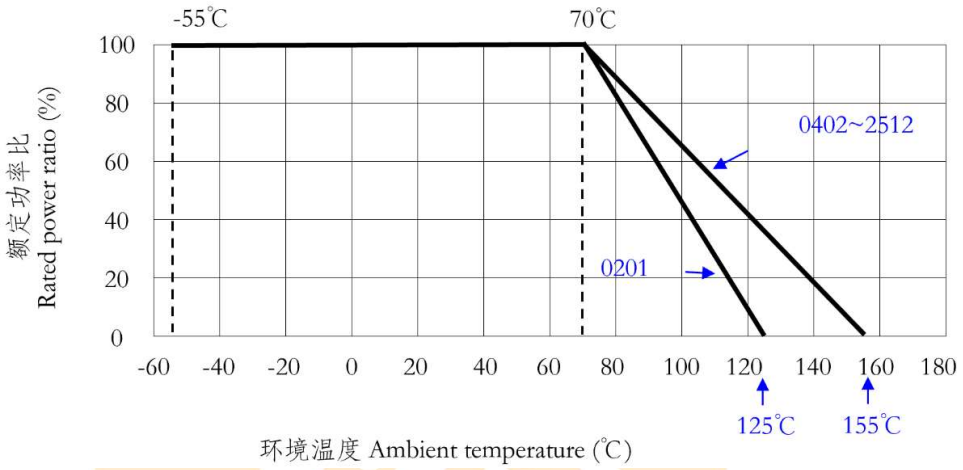

8. 可靠性测试项目(Reliability Test)

No.	Test items （测试项目）	Reference Standard （参考标准）	Test methods （测试方法）	Specifications （规格）
1	Temperature Coefficient of Resistance (T.C.R) （电阻温度系数）	JIS-C5201-1-4.8	>DC resistance values measurement >Temperature Coefficient of Resistance (T.C.R) Natural resistance change per change in degree centigrade. $\frac{R_2 - R_1}{R_1(t_2 - t_1)} \times 10^6$ (ppm/°C) R1:室溫下量測之阻值(Ω); R2:-55℃或+155℃下量測之阻值(Ω) t1:室溫之溫度(℃); t2:-55℃或+155℃之溫度(℃)。 t1: Room temperature; t2: -55℃ or +155℃ test temperature R1: Resistance at reference temperature R2: Resistance at test temperature	Within Specified T.C.R 在规定值内
2	Short Time Overload （短时间过负载）	JIS-C5201-1-4.13	Permanent resistance change after 5 seconds application of a voltage 2.5 times RCWV or the maximum overload voltage specified in the above list, whichever is less. 2.5 倍额定电压或最大过负荷电压取最小者保持	△R/R max. ±(2%+0.05Ω);0Ω max. 50mΩ or less No visible damage

			5 秒	无可见损伤
3	Bending Strength（弯曲强度）	JIS-C5201-1-4.33	Resistors mounted on a 90mm glass epoxy resin PCB(FR4); bending: 0201-0402 5 mm, 0603-0805 3mm, 1206-2512 2mm, once for 10 seconds, bending speed 1mm/ s 弯曲速度: 1mm/ s，弯曲距离: 0201-0402弯曲5mm，0603-0805弯曲3mm，1206-2512弯曲2mm	△R/R max. ±(1%+0.05Ω);0Ω max. 50mΩ or less No Mechanical damage 无可见损伤
4	Adhension（附着力）	JIS-C5201-1-4.32	Pressurizing force: 5N, Test time: 10±1sec. 施加力5N，持续10s±1s	No Mechanical damage 无可见损伤
5	Temperature Cycling（高低温温度循环）	JIS-C5201-1-4.19	30 minutes at -55℃±3℃, 5 minutes at room temperature, 30 minutes at +155℃±3℃, 5 minutes at room temperature, total 5 continuous cycles -55℃ 30分钟，常温5分钟， +155℃ 30 分钟，连续5循环	△R/R max. ±(1%+0.05Ω);0Ω max. 50mΩ or less No Mechanical damage 无可见损伤
6	Resistance to Soldering Heat（耐焊性）	JIS-C5201-1-4.18	Un-mounted chips completely immersed for 10±1second in a SAC solder bath at 260℃±5℃ 未焊接产品完全浸没在 260℃±5℃锡炉中，并持续10s±1s	△R/R max. ±(1%+0.05Ω);0Ω max. 50mΩ or less No Mechanical damage 无可见损伤
7	Solderability（焊锡性）	JIS-C5201-1-4.17	Un-mounted chips completely immersed for 2~3 second in a SAC solder bath at 245℃±5℃ 未焊接产品完全浸没在245℃±5℃锡炉，并持续2~3s	At least 95% of surface area of electrode shall be covered with new solder
8	Load Life Humidity（恒温恒湿寿命试验）	JIS-C5201-1-4.24	1000 +48/-0 hours, loaded with RCWV or Vmax in humidity chamber controller at 40° C±2° C and 90~95% relative humidity, 1.5hours on and 0.5 hours off 40℃±2℃，湿度90%~95%，1000小时；定格电压（90分钟ON，30分钟OFF）	△R/R max. ±(2%+0.05Ω);0Ω max. 50mΩ or less No Mechanical damage 无可见损伤
9	Load Life（70℃耐久性试验）	JIS-C5201-1-4.25	1000 +48/-0 hours, loaded with RCWV or Vmax in chamber controller 70±2℃, 1.5 hours on and 0.5 hours off 70℃±2℃，1000小时，额定电压通1.5小时，断0.5小时	△R/R max. ±(2%+0.05Ω);0Ω max. 50mΩ or less No Mechanical damage 无可见损伤
10	High Temperature Exposure（高温存储）	IEC-60115-1-4.25 MIL-STD-202 Mothod 108	At +155℃ for 1000hrs, Unpowered, measure the variation of resistance at 24±4hours after test conclusion △R%=(R2-R1)/R1*100% R1=Resistance before test（试验前阻值） R2=Resistance after test（试验后阻值） 置于+155℃温度中，不通电，共1000小时，试验结束24±4小时后量测试验前后阻值变化率	△R/R max. ±(2%+0.05Ω);0Ω max. 50mΩ or less No visible damage 无可见损伤

9. 丝印规则说明(The marking rule instructions)

9.1 丝印规格汇总表：

种类 Kinds	产品尺寸 Product Size	阻值系列 Resistance Series	阻值公差 Resistance Tolerance	阻值范围 Resistance Range	格式 Forms	图示 Illustrators & Examples
无字码 No Marking	0201/0402	ALL	5%&1%&0.5%&0.1%	ALL		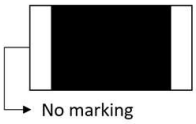
一字码 1 Digit Marking	0603~2512	-	5%&1%	0R	X	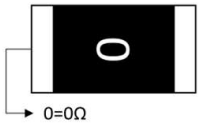
三字码 3 Digits Marking	0603~2512	E24	5%	10R≤R≤10M	XXX	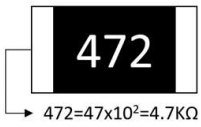
		E24	5%	1R0≤R<10R	XRX	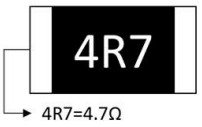
	0603	E24 and not belong to E96	1%&0.5%&0.1%	All E24 resistance value except vlaues 10/11/13/15/20/75	XXX with short bar below	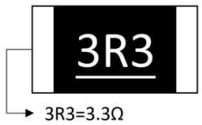
		E96	1%&0.5%&0.1%	ALL	XXX formed with 2 resistance code +capital letter	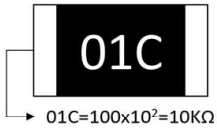
四字码 4 Digits Marking	0805~2512	E24&E96	1%&0.5%&0.1%	100R≤R≤10M	XXXX	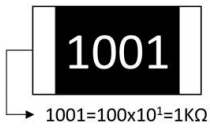
		E24&E96	1%&0.5%&0.1%	10R≤R<100R	XXRX	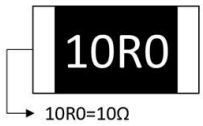
		E24&E96	1%&0.5%&0.1%	1R0≤R<10R	XRXX	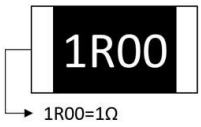

9.2 0603 ±1%产品丝印说明：

» 均用三字码表示（不包括 0R）。

For ±1% tolerance 0603 products except 0R, the marking is 3 digits

» E-24系列阻值（但不属于E96系列）：同±5%产品字码表示规则，但在三个字码下方加下划线标示。

Standard E24 and not belong to E96 series value of 0603 ±1%, the marking is the same as ±5% tolerance but marking as underline on the three digits.

E.G.

4.7Ω=4R7　　47Ω=47R=47X10^0=470　　470Ω=470R=47X10^1=471

4700Ω=4K7=47X10^2=472　　47000Ω=47K=47X10^3=473　　470000=470K=47X10^4=474

4700000Ω=4M7=47X10^5=475

» E-96系列阻值：前两码为阻值代码，第三码为英文大写字母，表示倍率(10 ^{n} 次幂)。

Standard E96 series values of 0603 ±1%, the first two digits is the resistance code, the third digit is capital letter and denotes the power number of 10(10 ^{n})

E.G.

1Ω=1R00=100X10^{-2}=01Y　　10Ω=10R0=100X10^{-1}=01X　　100Ω=100R=100X10^0=01A

1000Ω=1K00=100X10^1=01B　　10000Ω=10K0=100X10^2=01C　　100000Ω =100K=100X10^3=01D

1000000Ω=1M00=100X10^4=01E

0603 ±1% E96系列倍率字母代码表(Multiplier Code For 0603 ±1% Marking)

字母代码	Z	Y	X	A	B	C	D	E	F	G
倍率	10^{-3}	10^{-2}	10^{-1}	10^0	10^1	10^2	10^3	10^4	10^5	10^6

E-96 系列标称阻值的数字代码表
E-96 Series Standard Resistance Value Code

标称值 Nominal Resistance	代码 Code	标称值 Nominal Resistance	代码 Code	标称值 Nominal Resistance	代码 Code	标称值 Nominal Resistance	代码 Code	标称值 Nominal Resistance	代码 Code
100	01	162	21	261	41	422	61	681	81
102	02	165	22	267	42	432	62	698	82
105	03	169	23	274	43	442	63	715	83
107	04	174	24	280	44	453	64	732	84
110	05	178	25	287	45	464	65	750	85
113	06	182	26	294	46	475	66	768	86
115	07	187	27	301	47	487	67	787	87
118	08	191	28	309	48	499	68	806	88
121	09	196	29	316	49	511	69	825	89
124	10	200	30	324	50	523	70	845	90
127	11	205	31	332	51	536	71	866	91
130	12	210	32	340	52	549	72	887	92
133	13	215	33	348	53	562	73	909	93
137	14	221	34	357	54	576	74	931	94
140	15	226	35	365	55	590	75	953	95
143	16	232	36	374	56	604	76	976	96
147	17	237	37	383	57	619	77		
150	18	243	38	392	58	634	78		
154	19	249	39	402	59	649	79		
158	20	255	40	412	60	665	80		

10. 包装方式Taping & Package

10.1 纸带包装 Paper taping（适用0201/0402/0603/0805/1206/1210）

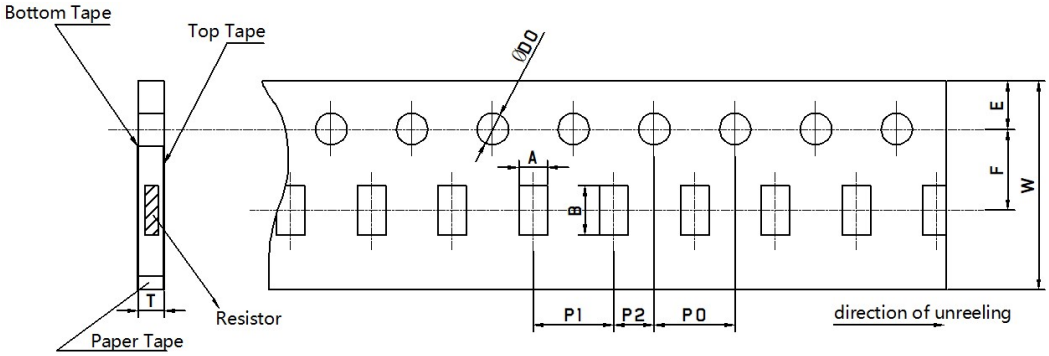

10.2 塑胶带包装Embossed Taping（适用1812/2010/2512）

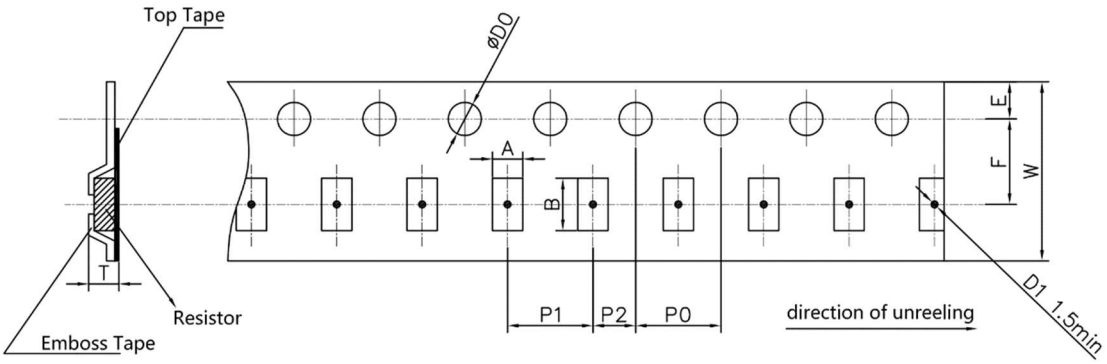

10.3 规格表Specification

单位Unit：mm

型别	A	B	W	F	E	P1	P2	P0	D0	T	D1
0201	0.45±0.10	0.75±0.10	8.0±0.1	3.5±0.05	1.75±0.1	2.0±0.1	2.0±0.05	4.0±0.1	Ø1.5+0.1	0.35±0.1	-
0402	0.65±0.10	1.15±0.10	8.0±0.1	3.5±0.05	1.75±0.1	2.0±0.1	2.0±0.05	4.0±0.1	Ø1.5+0.1	0.45±0.1	-
0603	1.10±0.15	1.85±0.15	8.0±0.1	3.5±0.05	1.75±0.1	4.0±0.1	2.0±0.05	4.0±0.1	Ø1.5+0.1	0.60±0.1	-
0805	1.50±0.15	2.30±0.20	8.0±0.1	3.5±0.05	1.75±0.1	4.0±0.1	2.0±0.05	4.0±0.1	Ø1.5+0.1	0.75±0.1	-
1206	1.90±0.15	3.45±0.20	8.0±0.1	3.5±0.05	1.75±0.1	4.0±0.1	2.0±0.05	4.0±0.1	Ø1.5+0.1	0.75±0.1	-
1210	2.85±0.15	3.50±0.20	8.0±0.1	3.5±0.05	1.75±0.1	4.0±0.1	2.0±0.05	4.0±0.1	Ø1.5+0.1	0.75±0.1	-
1812	3.30±0.15	4.60±0.20	12.0±0.1	5.5±0.05	1.75±0.1	4.0±0.1	2.0±0.05	4.0±0.1	Ø1.5+0.1	1.00±0.1	Ø1.5±0.1
2010	2.77±0.15	5.30±0.20	12.0±0.1	5.5±0.05	1.75±0.1	4.0±0.1	2.0±0.05	4.0±0.1	Ø1.5+0.1	1.00±0.1	Ø1.5±0.1
2512	3.40±0.15	6.65±0.20	12.0±0.1	5.5±0.05	1.75±0.1	4.0±0.1	2.0±0.05	4.0±0.1	Ø1.5+0.1	1.00±0.1	Ø1.5±0.1

10.4 料盘尺寸Reel Specification（单位：mm）

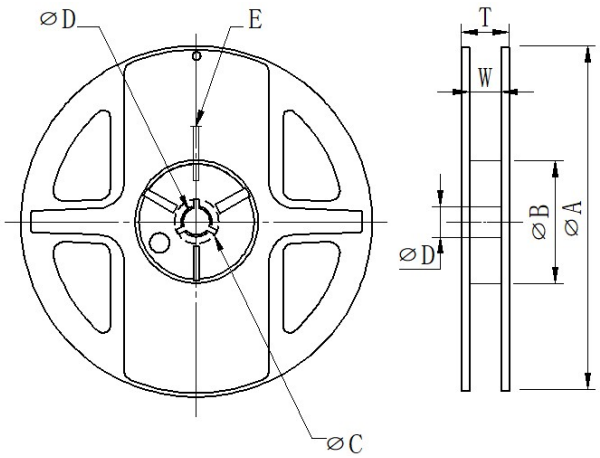

型别	尺寸	数量（pcs）	ØA	ØB	ØC	ØD	E	W	T
0201	7″	10000	178.0±1.0	60.0±1.0	21±0.5	13.0±0.5	2.0±0.5	9.5±1.0	11.5±1.0
0402	7″	10000	178.0±1.0	60.0±1.0	21±0.5	13.0±0.5	2.0±0.5	9.5±1.0	11.5±1.0
0603	7″	5000	178.0±1.0	60.0±1.0	21±0.5	13.0±0.5	2.0±0.5	9.5±1.0	11.5±1.0
0805	7″	5000	178.0±1.0	60.0±1.0	21±0.5	13.0±0.5	2.0±0.5	9.5±1.0	11.5±1.0
1206	7″	5000	178.0±1.0	60.0±1.0	21±0.5	13.0±0.5	2.0±0.5	9.5±1.0	11.5±1.0
1210	7″	5000	178.0±1.0	60.0±1.0	21±0.5	13.0±0.5	2.0±0.5	9.5±1.0	11.5±1.0
1812	7″	4000	178.0±1.0	60.0±1.0	21±0.5	13.0±0.5	2.0±0.5	13.0±1.0	15.5±1.0
2010	7″	4000	178.0±1.0	60.0±1.0	21±0.5	13.0±0.5	2.0±0.5	13.0±1.0	15.5±1.0
2512	7″	4000	178.0±1.0	60.0±1.0	21±0.5	13.0±0.5	2.0±0.5	13.0±1.0	15.5±1.0

10.5 上胶带剥离力测试（Peel force of top cover tape）

A.测试方法Test Method：

将上胶带以300mm/分钟的速度，并沿165°~180°的方向进行剥离（如下图所示）。纸带的剥离力范围为0.1N~0.7N（10g~70g），载带的剥离力范围为0.15N~0.8N（15g~80g）。

The top cover tape is pulled at a speed of 300 mm/min with the angle between the tape during peel and the direction of unreeling maintained at 165 to 180 degree as following picture。The peel force of paper carrier tape shall be 0.1N to 0.7N(10 to 70 g), the peel force of plastic carrier tape shall be 0.15N to 0.80N (15g to 80 g).

B.测试要求Test requirement：

» 不允许有破裂断带现象。

The top cover tape should not have flash and tear after peeling

» 电阻松动自如，无粘面胶带、底胶带现象。

Resistor is free, no sticking to top tape and bottom tape.

» 电阻易从纸带中取出，且晶片孔无机械损伤。

Resistor is easy to take out from carrier tape and chip hole have no mechanical damage.

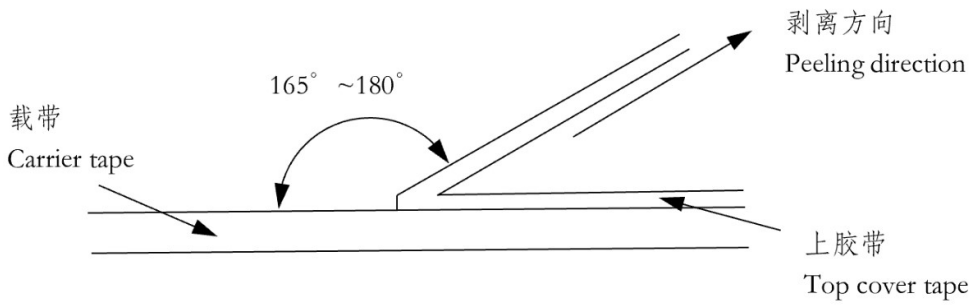

11. 片式电阻器使用说明Chip Resistor Instructions for Use

11.1 本产品在以下特殊环境下应用，性能可能会受到影响：

Application of the products in a special environment can deteriorate product performance:

» 在各种类型的液体，包括水、油、化学品、有机溶剂的使用。
Use in various types of liquid, including water, oils, chemicals, and organic solvents.

» 在高温、高湿、大量粉尘环境中使用
Used in the places with high temperature, high humidity and dusty.

» 在产品暴露的地方，有海风或腐蚀性气体，包括氯气 、硫化氢、氨气、二氧化硫、二氧化氮等。
Use in places where the products are exposed to sea winds or corrosive gases, including Cl_2, H_2S, NH_3, SO_2 and NO_2 etc.

» 在产品暴露于静电或电磁波的地方使用。
Use in places where the products are exposed to static electricity or electromagnetic waves.

» 在用树脂或其他涂层材料密封产品的情况下使用。
Use involving sealing or coating the products with resin or other coating materials.

» 焊接后使用不洁焊料或使用水或水溶性清洗剂清洗产品。
Use involving unclean solder or use of water or water-soluble cleaning agents for cleaning after soldering.

11.2 产品使用注意事项 Precautions on use of products：

» 避免采用超过正常额定功率的功率，超过额定功率的稳态负载条件下可能会对产品性能和可靠性产生负面影响。
Avoid applying power exceeding normal rated power, exceeding the power rating under steady-state、loading condition may negatively affect product performance and reliability.

» 作业时需确保电阻边缘及保护层免于机械应力破坏。
Avoid damage to the edge of resistor and protective layer caused by mechanical stress.

» 印刷电阻板（PCB）分开或固定在支撑体上时应小心操作，因为印刷电路板（PCB）安装的弯曲会对电阻器造成机械应力。
Handle with care when printing circuit board (PCB) is divided or fixed on support body, because bending of printing circuit board (PCB) mounting will make mechanical stress for resistors.

11.3 存储与搬运条件 Storage and transportation requirement:

» 贮存条件:温度 10℃～30℃，相对湿度 30%~70%。建议在符合上述储存条件下 1 年内使用。
Storage conditions: T: 10℃~30℃ , RH: 30%~70%. The products are suggested to be used within 1 year, and the storage condition mentioned above should be followed.

» 产品在搬运和存储时，请确保箱体的正确放置方向，严禁摔落、挤压箱体，否则可能造成产品的电极或本体受损。

When the product is moved and stored, please ensure the correct orientation of the box. Do not drop or squeeze the box. Otherwise, the electrode or the body of the product may be damaged.