WWW.XYECONN.COM

REV.	Q'TY	ECN. NO.	APR.	DATE

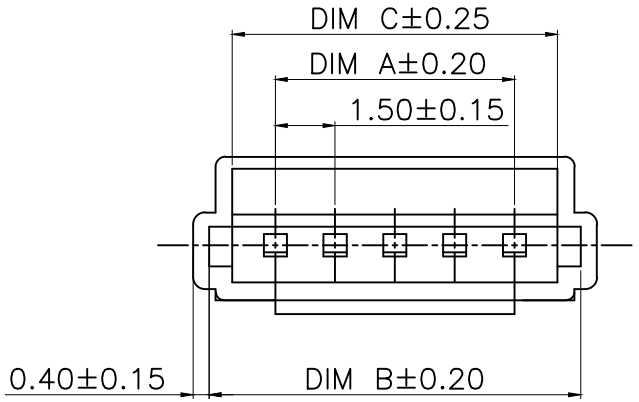

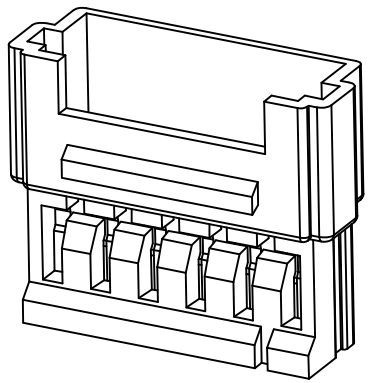

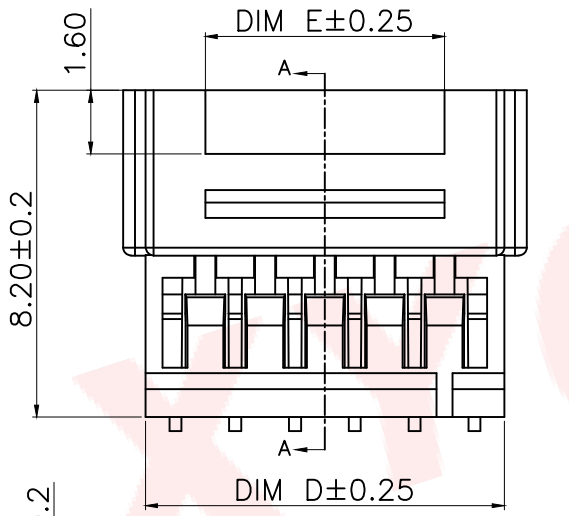

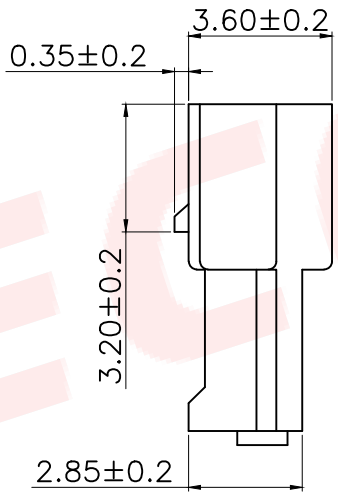

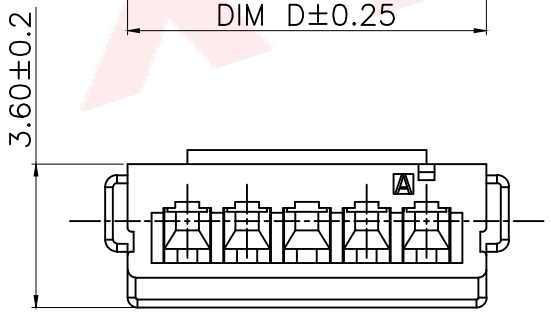

PART NO	PIN	A	B	C	D	E
XY-ZHB1.5-2A41-MW	2	1.50	4.82	3.66	4.50	3.00
XY-ZHB1.5-3A41-MW	3	3.00	6.32	5.16	6.00	3.00
XY-ZHB1.5-4A41-MW	4	4.50	7.82	6.66	7.50	4.50
XY-ZHB1.5-5A41-MW	5	6.00	7.90	8.16	9.00	6.00
XY-ZHB1.5-6A41-MW	6	7.50	9.40	9.66	10.50	7.50
XY-ZHB1.5-7A41-MW	7	9.00	10.90	11.16	12.00	9.00
XY-ZHB1.5-8A41-MW	8	10.50	12.40	12.66	13.50	10.50
XY-ZHB1.5-9A41-MW	9	12.00	13.90	14.16	15.00	12.00
XY-ZHB1.5-10A41-MW	10	13.50	15.40	15.66	16.50	13.50
XY-ZHB1.5-11A41-MW	11	15.00	16.90	17.16	18.00	15.00
XY-ZHB1.5-12A41-MW	12	16.50	18.40	18.66	19.50	16.50
XY-ZHB1.5-13A41-MW	13	18.00	19.90	20.16	21.00	18.00
XY-ZHB1.5-14A41-MW	14	19.50	21.40	21.66	22.50	19.50
XY-ZHB1.5-15A41-MW	15	21.00	22.90	23.16	24.00	21.00
XY-ZHB1.5-16A41-MW	16	22.50	24.40	24.66	25.50	22.50

技术指标:

1.温度范围:-25°C~85°C.
2.额定电压:100V AC,DC.
3.耐电压:500V AC/minute.
4.接触电阻:≤20mΩ .
5.绝缘电阻:≥500MΩ.
6.额定电流: 1A AC,DC.

材料:

1.塑胶:PA66 白色

DIMENSION IN mm		厦门市辛译精密电子有限公司 Xiamen XinYi Xyeconn Electronics Co.,Ltd			
TOLERANCE UNLESS OTHERWISE SPECIFIED					
X.:±0.50	±1°	APR. Alex	TITLE: ZHB1.5 WTB 母座带扣胶壳		
X.X:±0.20		CHK. Jack	DWG NO. XY-ZHB1.5-NA41-MW		
X.XX:±0.10		DRA. Can	PROJ.	CUSTOMER DRAWING	
			SIZE A4	SCALE	SHEET / REV.

FSRD-18A