WWW.XYECONN.COM

REV.	Q'TY	ECN. NO.	APR.	DATE

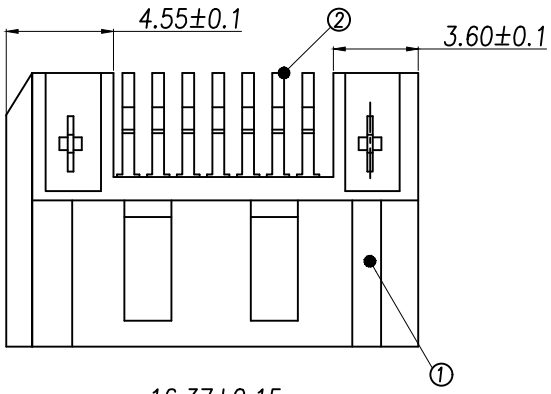

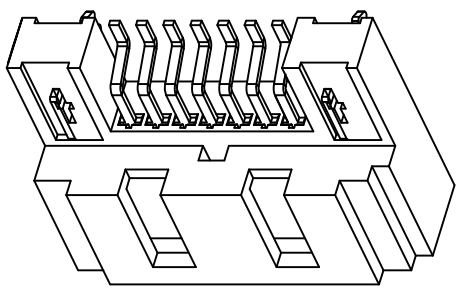

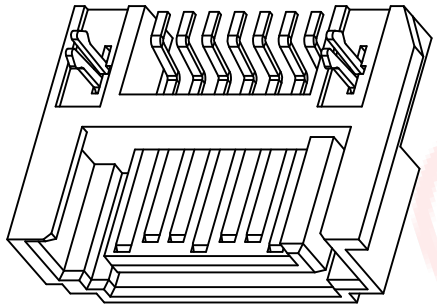

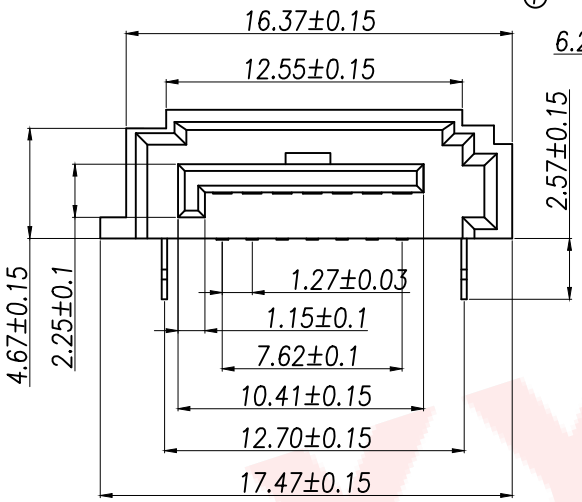

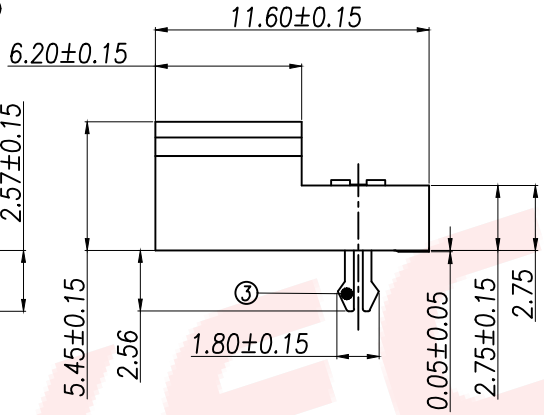

SPECIFICATION:
1.MATERIAL:
HOUSING:LCP UL 94V-0
COLOR:BLACK
CONTACT:BRASS C2680-H,T=0.25mm
PEG:BRASS C2680R-H,T=0.30mm
2.FINISH:
CONTACT:1u"/3u"/5u"/15u"GOLD/TIN PLATING ON CONTACT AREA
100u" TIN PLATING ON SOLDERTAILS
50u" NICKEL UNDERPLATING OVERALL
PEG:100u" TIN PLATING ON SOLDERTAILS
50u" NICKEL UNDERPLATING OVERALL

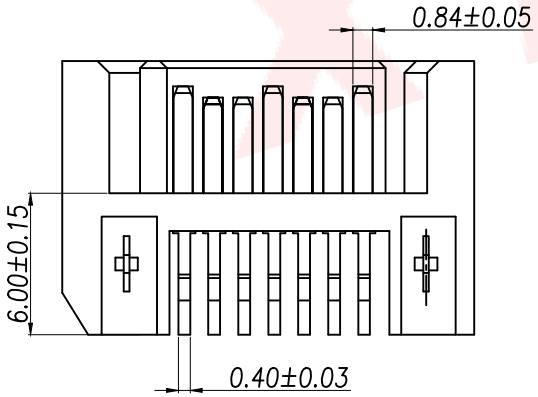

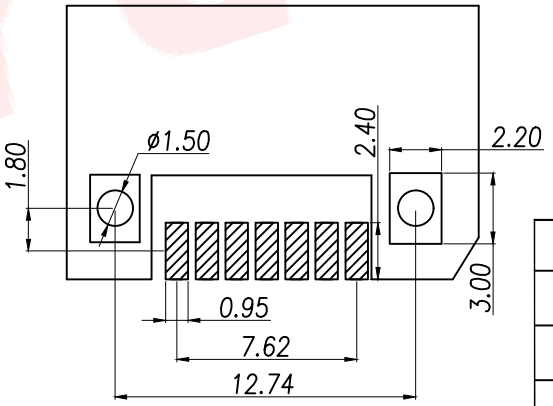

RECOMMEND PCB LAYOUT
PCB TOLERANCE:±0.05

	环保要求	产品必须符合ROHS要求		
3	Peg	Brass C2680R-H		Tin/Ni Plated
2	Terminal	Brass C2680R-H		Gold/Tin Plated
1	Housing	High Temp	Black	UL 94V-0
NO.	DESCRIPTION	MATERIAL	COLOR	REMARK

DIMENSION IN mm		厦门市辛译精密电子有限公司 Xiamen XinYi Xyeconn Electronics Co.,Ltd			
TOLERANCE UNLESS OTHERWISE SPECIFIED					
.X:±0.30	.X°:±3°	APR. Alex	TITLE: SATA 7P 公座 三面包 SMT型		
.XX:±0.20	.XX°:±2°	CHK. Jack	DWG NO. XY-SATA-7AWT-03G		
			PROJ.	CUSTOMER DRAWING	
.XXX:±0.05	.XXX°:±0.5°	DRA. Can	SIZE A4	SCALE 1:1	SHEET 1/1 REV. A

F-RD-18A