WWW.XYECONN.COM

REV.	Q'TY	ECN. NO.	APR.	DATE

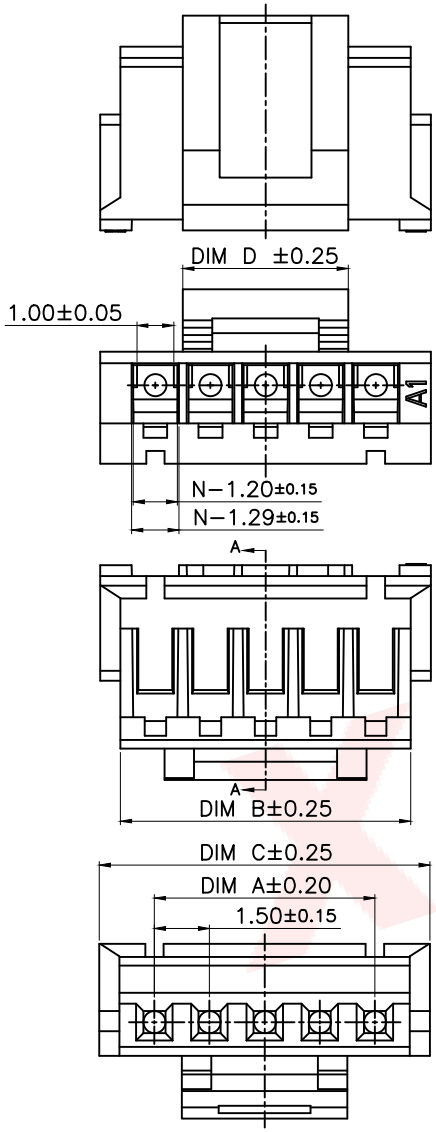

技术指标:

1.温度范围:−25°C~85°C.
2.额定电压:100V AC,DC.
3.耐电压:500V AC/minute.
4.接触电阻:≤20mΩ .
5.绝缘电阻:≥500MΩ.
6.额定电流: 1A AC,DC.

材料:

1.塑胶:PA66 白色

PART NO	PIN	A	B	C	D
XY−ZHB1.5−2A41−GW	2	1.50	3.40	4.50	2.30
XY−ZHB1.5−3A41−GW	3	3.00	4.90	6.00	3.00
XY−ZHB1.5−4A41−GW	4	4.50	6.40	7.50	3.00
XY−ZHB1.5−5A41−GW	5	6.00	7.90	9.00	4.50
XY−ZHB1.5−6A41−GW	6	7.50	9.40	10.50	6.00
XY−ZHB1.5−7A41−GW	7	9.00	10.90	12.00	
XY−ZHB1.5−8A41−GW	8	10.50	12.40	13.50	
XY−ZHB1.5−9A41−GW	9	12.00	13.90	15.00	
XY−ZHB1.5−10A41−GW	10	13.50	15.40	16.50	
XY−ZHB1.5−11A41−GW	11	15.00	16.90	18.00	
XY−ZHB1.5−12A41−GW	12	16.50	18.40	19.50	
XY−ZHB1.5−13A41−GW	13	18.00	19.90	21.00	
XY−ZHB1.5−14A41−GW	14	19.50	21.40	22.50	
XY−ZHB1.5−15A41−GW	15	21.00	22.90	24.00	
XY−ZHB1.5−16A41−GW	16	22.50	24.40	25.50	

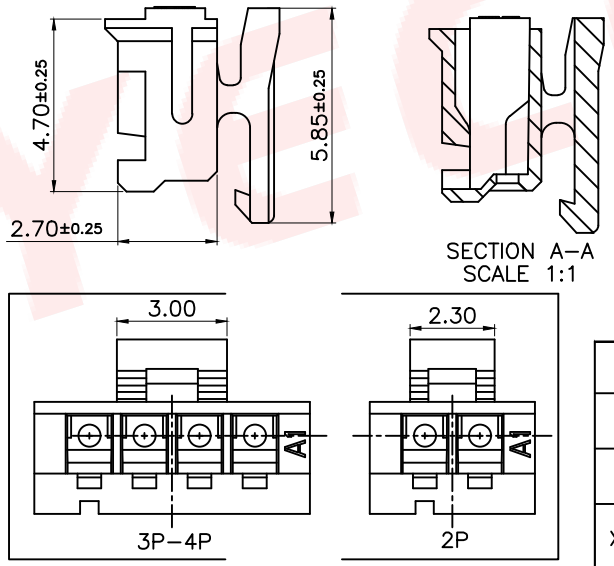

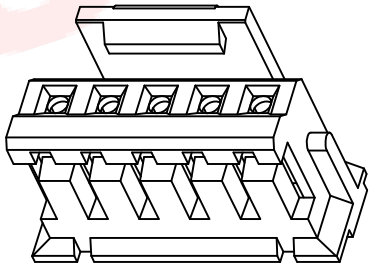

DIMENSION IN mm		厦门市辛译精密电子有限公司 Xiamen XinYi Xyeconn Electronics Co.,Ltd		
TOLERANCE UNLESS OTHERWISE SPECIFIED				
X.:±0.50	±1°	APR. Alex	TITLE: ZHB1.5 WTB 公头带扣胶壳	
X.X:±0.20		CHK. Jack	DWG NO. XY-ZHB1.5-NA41-GW	
X.XX:±0.10		DRA. Can	PROJ.	CUSTOMER DRAWING
			SIZE A4 / SCALE / SHEET / REV.	

FORD−18A