Features

- 2V to 24V Input Voltage
- Up to 28V Output Voltage
- Integrated 80mΩ Power MOSFET
- 1.2MHz Fixed Switching Frequency
- Internal 4A Switch Current Limit
- Internal Compensation
- Adjustable Output Voltage
- Thermal Shutdown
- Automatic Pulse Frequency Modulation Mode
- At Light Loads
- Up to 93% Efficiency

Applications

- Digital Set-top Box (STB)
- Tablet Personal Computer (Pad)
- LCD Bias Supply
- Battery-Powered Equipment
- Portable Media Player (PMP)
- DSL and Cable Modems and Routers

General Description

The Y3608 is a constant frequency, 6 -pin SOT-23-6L current mode step-up converter intended for small, low power applications. The Y3608 switches at 1. 2MHz and allows the use of tiny, low cost capacitors and inductors. Internal soft-start results in small inrush current and extends battery life.

The Y3608 features automatic shifting to pulse frequency modulation mode at light loads. The Y3608 includes under-voltage lockout, current limiting, and thermal overload protection to prevent damage in the event of an output overload.

Typical Application

Power supply tied to VOUT

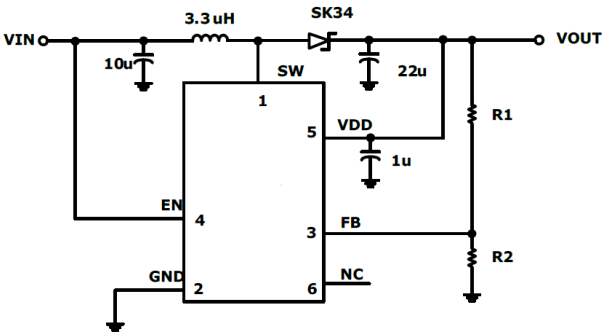

Power supply tied to VIN(VIN>2.8V)

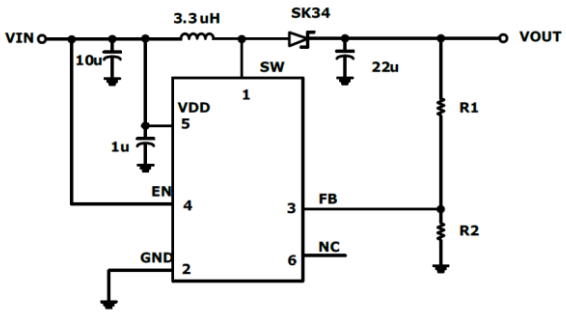

Figure1. Basic Application Circuit

Functional Block Diagram

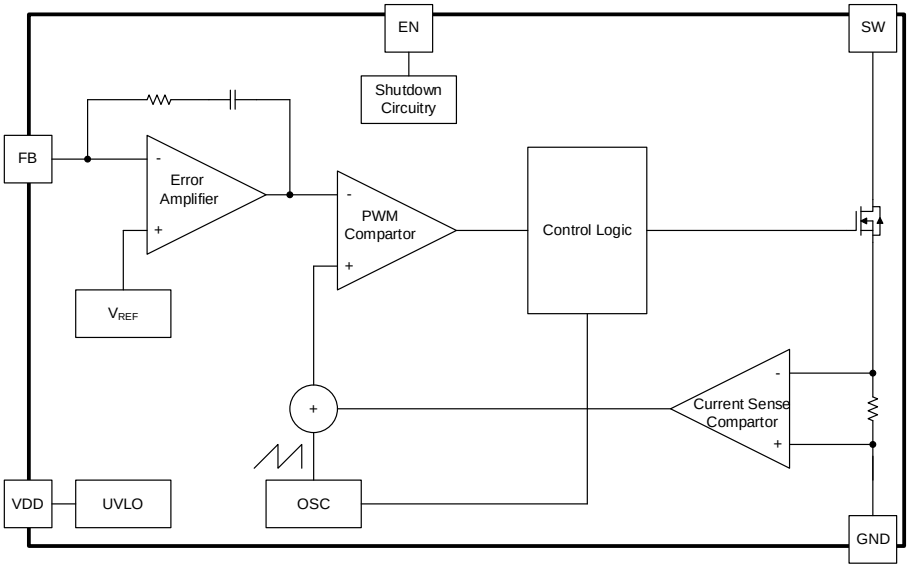

Figure 1. Y 3608 Block Diagram

Pin Description

PIN	NAME	FUNCTION
1	LX	Power Switch Output. LX is the drain of the internal MOSFET switch. Connect the power inductor and output rectifier to LX. LX can swing between GND and 24V.
2	GND	Ground Pin
3	FB	Feedback Input. The FB voltage is 0.6V. Connect a resistor divider to FB.
4	EN	Regulator On/Off Control Input. A high input at EN turns on the converter, and a low input turns it off. When not used, connect EN to the input supply for automatic startup.
5	VDD	Input Supply Pin. Must be locally bypassed.
6	NC	Not Connection

Package/order Information

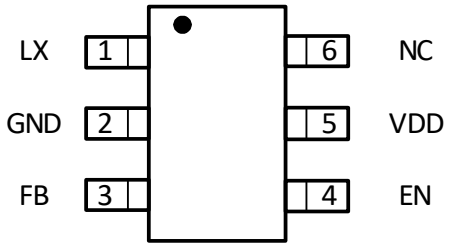

(SOT-23-6L)

Absolute Maximum Ratings

PARAMETER	ABSOLUTE MAXIMUM RATINGS	UNIT
V_{DD}	-0.3 to 24	V
V_{SW}, V_{OUT}	-0.3 to 28	V
Peak SW Sink and Source Current	3.5	A
Power Dissipation	250	mW
Operating Temperature Range	-40 to 80	
Storage Temperature	-65 to 125	°C

Electrical Charcteristics (Ta=25℃, VIN=1.5V，VOUT=3.3V unless otherwise noted)

PARAMETER	SYMBOL	CONDITIONS	MIN	TYP	MAX	UNIT
Output voltage	VOUT	-	2.5	-	28	
Input voltage	VDD	-	2	-	24	
VIN under voltage lockout threshold	UVLO_F	-	1.7	-	2	V
VIN under voltage lockout hysteresis	UVLO_HYS	-	-	110	-	mV
Shutdown mode	IOFF	VEN<VENL	-	0.01	1	μA
I Quiescent Current (PFM)	I_PFM	VIN=3.6V，VOUT=5V	-	100	-	μA
FB Voltage	VR	VOUT=5V	588	600	612	mV
Switching frequency	FS	IOUT=1A	-	1.2	-	MHz
Maximum Duty Cycle	DMAX	VFB=0V	-	90	-	%
Internal power MOFFET resistance	RDSON	VIN=5V	-	80	150	mΩ
SW Current Limit	ISW	VIN=5V	3.5	-	-	A
Load regulation	ΔVLINE	IOUT=1.2A，VIN=3V~4.2V	-	0.38	-	%
Line regulation	ΔVLOAD	VIN=3.6V，IOUT=10mA~1.2A	-	0.41	-	%
EN Input High Voltage	VENH	VIN=3.6V	1.2	-	-	V
EN Input Low Voltage	VENL	VIN=3.6V	-	-	0.5	V
SW Leakage	ISW_L	VSW=20V	-	-	1	uA
Thermal Shutdown	TSHD	VIN=3.6V，IOUT=10mA	-	160	-	℃

Marking Information

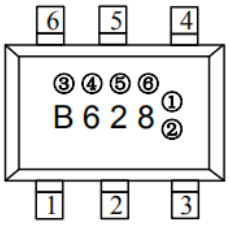

SOT-23-6L

Note: The major mark：Y1208 .

The secondary Mark:B628①②③④⑤⑥，the ①②③④⑤⑥Represents the assembly lot No.

Typical Performance Characteristics

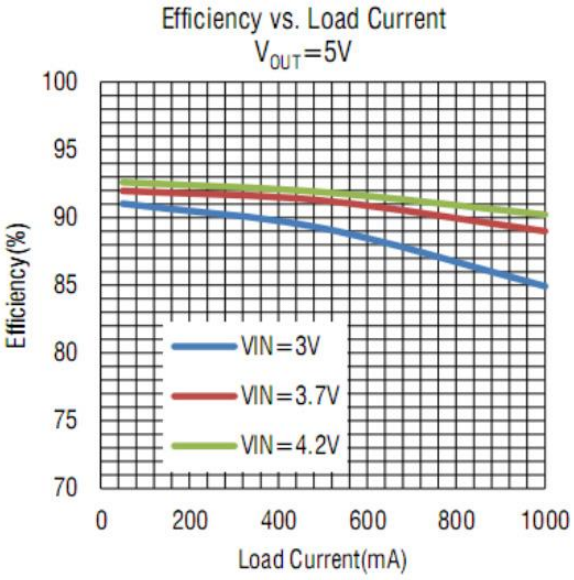

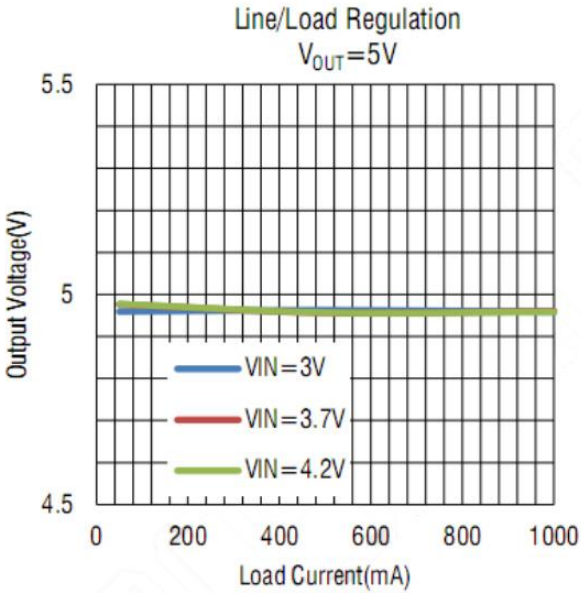

Applications Information

Setting the Output Voltage

Y3608 are internally compensated and do not require external components to achieve stable operation. The output voltage can be programmed by resistor divider.

$$V_{OUT} = V_{FEEDBACK} \times \frac{R1+R2}{R2}$$

R1>100K(Recommended resistance)

Inductor Selection

The recommended inductance range is 3.3uH to 22uH. Inductor selection mainly considers smaller DCR resistance to ensure higher efficiency.

Capacitor Selection

The capacitance value of the input capacitor and output capacitor is recommended to be more than 22uF. In order to obtain a smaller output ripple, it is recommended to use a ceramic capacitor for the output. Pin 5 needs a 1uF capacitor for voltage regulation, it is recommended to use a ceramic capacitor.

Diode Selection

A Schottky diode should be used for the output diode. The lower the forward voltage drop, the higher the load efficiency. For different output voltages, pay attention to the selection of the reverse withstand voltage of the freewheeling diode to be high enough (>VOUT+5V) to prevent reverse leakage or breakdown.

Layout Consideration

Input capacitors and output capacitors as close as possible to the chip pins. The power path from VIN to inductor and to VOUT should be as short as possible and and as thick as possible. The SW pin has a high frequency switching signal, pay attention to isolation from other components on the PCB board.

Package Description

6-pin SOT-23-6L Outline Dimensions

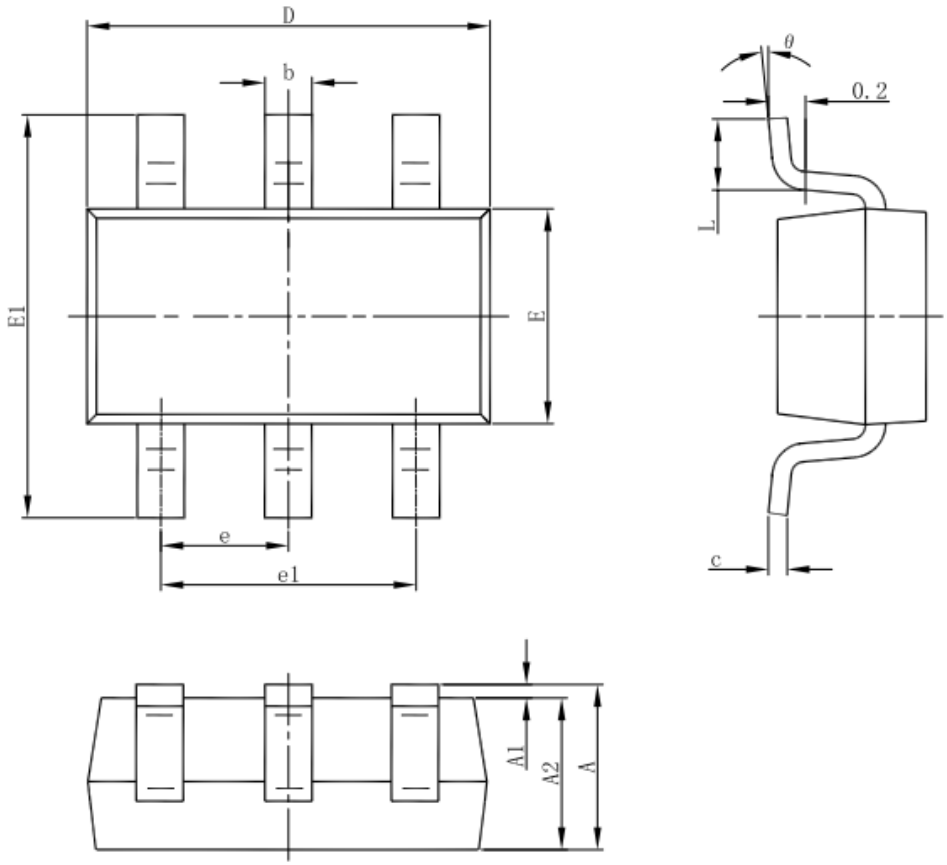

Symbol	Dimensions In Millimeters		Dimensions In Inches	
	Min	Max	Min	Max
A	1.050	1.250	0.041	0.049
A1	0.000	0.100	0.000	0.004
A2	1.050	1.150	0.041	0.045
b	0.300	0.500	0.012	0.020
c	0.100	0.200	0.004	0.008
D	2.820	3.020	0.111	0.119
E	1.500	1.700	0.059	0.067
E1	2.650	2.950	0.104	0.116
e	0.950(BSC)		0.037(BSC)	
e1	1.800	2.000	0.071	0.079
L	0.300	0.600	0.012	0.024
θ	0°	8°	0°	8°