HONGLITRONIC
鸿利光电

Under Development	●
Mass production	

RoHS

Specification

规 格 书

Customer Name：_____

客户名称：

Customer P/N：_____

客户品号：

Factory P/N：HL-EMC-3030D93W-2C-S1-HR3-Y-P6(4750K-5300K)

公司品号：

Sending Date：_____

送样日期：

Client approval 客户审核		Hongli approval 鸿利智汇审核			
Approval 核准	Audit 确认	Audit 确认			Confirmation 制作
		Sales department 营销中心	Quality department 品质部	Engineering technology centre 工程技术中心	刘萍萍
☐ Qualified 接受 ☐ Disqualified 不接受		DATE: 日期：			

Adr：No.1,Xianke Yi Road,Huadong Town,Huadu District,Guangzhou,China
地址：中国广州市花都区花东镇先科一路1号
Tel/电话：020-37705135 Fax/传真：020-37705136

注:1. 此规格书以中英文方式书写, 若有冲突以中文版本为准文本.
2. 此规格书的最终解释权归鸿利智汇集团股份有限公司
3. 此规格书的有效期限为两年, 自盖章或签字之日起计算, 期满时双方可以续签协议, 但应采用书面形式

Under Development	●
Mass production	

HL-EMC-3030D93W-2C-S1-HR3-Y-P6(4750K-5300K)

Features(特征）



- PLCC-2 Package.(PLCC-2 封装）
- Extremely wide viewing angle.（宽的发光角度）
- Suitable for all SMT assembly and solder process.（适用于所有的SMT组装和焊接工艺）
- Available on tape and reel.（适用于载带及卷轴）
- Moisture sensitivity level: Level 4.（防潮等级 Level 4）
- Package:4500pcs/reel..(包装每卷4500PCS）
- RoHS compliant. (RoHS 认证）

Description（描述）

The White LED which was fabricated using a blue chip and the phosphor

白光LED由蓝光芯片与荧光粉激发而成

After the product life cycle for recycling

产品生命周期后进行回收处理



ATTENTION
OBSERVE PRECAUTIONS
FOR HANDLING
ELECTROSTATIC
DISCHARGE
SENSITIVE
DEVICES

注意：操作时应注意静电敏感

释放设备装置

Applications（应用）

- Optical indicator（光学指示）
- Indoor display（室内显示）
- Outdoor lighting（户外照明）
- General lighting（通用照明）

Package Dimensions（封装尺寸）

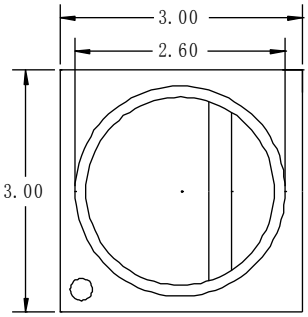

Recommended Soldering Pattern
（建议焊盘尺寸图）

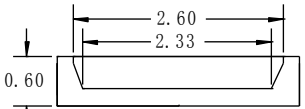

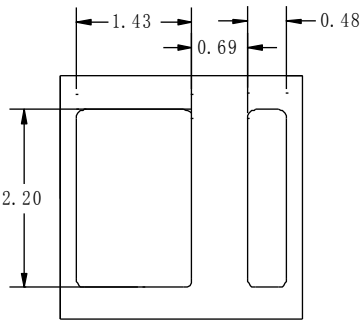

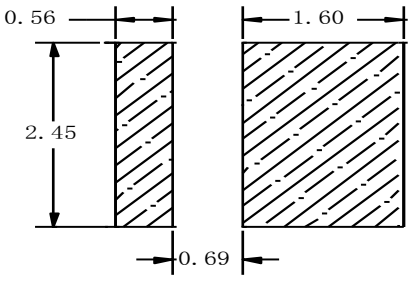

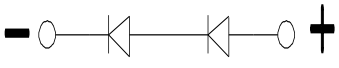

Notes:（备注）

1. All dimension units are millimeters.（所有标注尺寸单位为毫米）

2.All dimension tolerance is ±0.15mm unless otherwise noted.（除特别标注外，所有尺寸允许公差±0.15mm ）

HL-EMC-3030D93W-2C-S1-HR3-Y-P6(4750K-5300K)

Selection Guide（选择指南）

Part No. 型号	Chip Materials 芯片材料	Lens Type 胶体类型
HL-EMC-3030D93W-2C-S1-HR3-Y-P6	InGaN	Yellow Diffused

Mass Production list（批量生产目录）

Part No. 型号	CCT（K）Typ	Φ（lm）Min	Φ（lm）Typ	Test Conditions 测试条件
HL-EMC-3030D93W-2C-S1-HR3-Y-P6 （4750K-5300K）	6500	260	280	IF=350mA
	6000	260	280	IF=350mA
	5700	260	280	IF=350mA
	5000	260	280	IF=350mA
	4500	260	280	IF=350mA
	4000	260	280	IF=350mA
	3500	240	260	IF=350mA
	3000	240	260	IF=350mA
	2700	220	240	IF=350mA

Electrical / Optical Characteristics at Ta=25°C 电性与光学特性

Parameter（参数）	Symbol（符号）	Min.（最小）	Typ.（平均）	Max.（最大）	Units（单位）	Test Conditions 测试条件
Forward Voltage 正向电压	VF	6.4	- -	7.4	V	IF=350mA
Viewing Angle 角度	2θ1/2	- -	120	- -	Deg	IF=350mA
Color Rendering Index 显色性指数	Ra	80	- -	- -	- -	IF=350mA

Note:(备注）

1. 2θ1/2 is the angle from optical centerline where the luminous intensity is 1/2 the optical centerline value.
   2θ1/2 是半值角, 指光强是光学中心线光强的1/2处到光学中心线的角度
2. The above luminous flux measurement allowance tolerance is ±5%.
   上述光通量的测试允许公差为±5%
3. The above Color Rendering Index measurement allowance tolerance is –2
   以上显色性指数的测试允许公差为-2
4. The above forward voltage measurement allowance tolerance is ±0.2V.
   以上所示电压测量误差±0.2V
5. The above color coordinates measurement allowance tolerance is ±0.003.
   以上所示坐标测量误差±0.003

HL-EMC-3030D93W-2C-S1-HR3-Y-P6(4750K-5300K)

Absolute Maximum Ratings at Ta=25°C 绝对最大额定值

Parameter（参数）	Symbol（符号）	Rating（值）	Units（单位）
Power Dissipation（功耗）	Pd	2520	mW
Forward Current（正向电流）	IF	350	mA
Electrostatic Discharge (HBM)（静电）	ESD	1000	V
TS Temperature（TS温度）	TS	105	℃
Storage Temperature（保存温度）	Tstg	-40 ~ +100	℃
Junction Temperature结温	Tj	125	℃

HL-EMC-3030D93W-2C-S1-HR3-Y-P6(4750K-5300K)

Typical optical characteristics curves 典型光学特性曲线

Soldering Temperature vs. Forward Current
焊盘温度与正向电流特性曲线

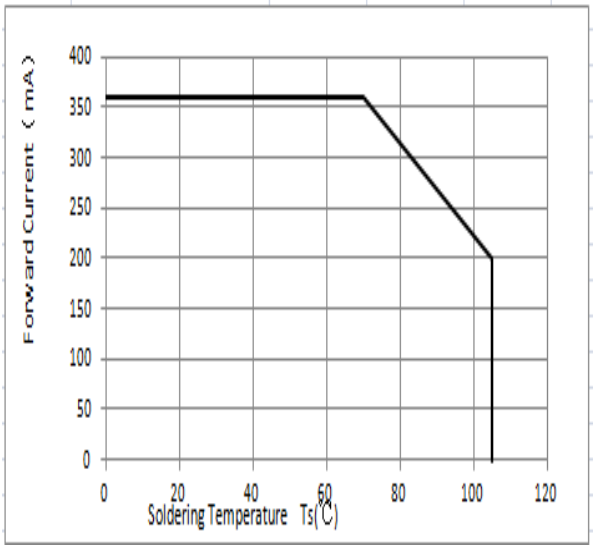

Forward Current VS. Relative Intensity
正向电流与相对光强特性曲线

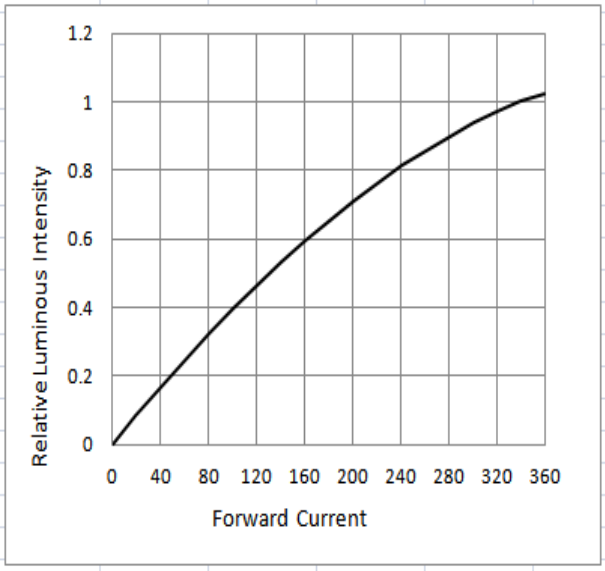

Forward Voltage VS. Forward Current
正向电压与正向电流特性曲线

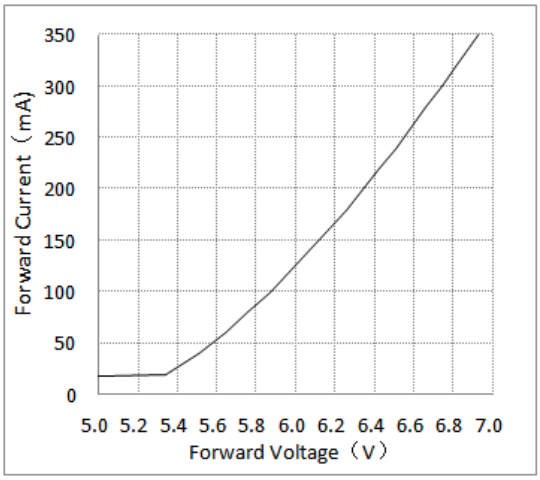

Ambient Temperature VS. Relative Intensity
环境温度与相对光强特性曲线

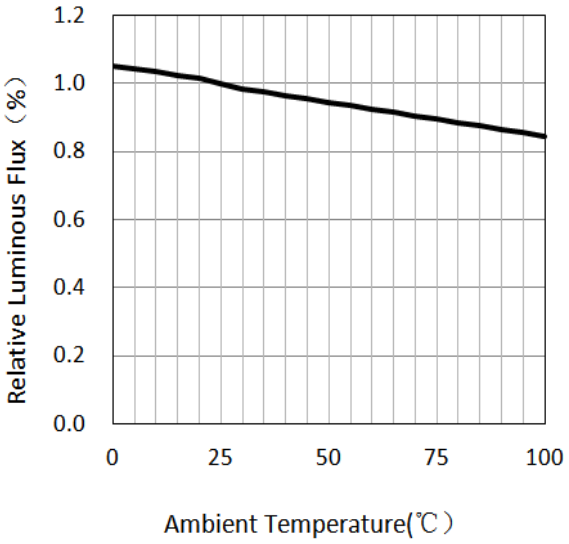

HL-EMC-3030D93W-2C-S1-HR3-Y-P6(4750K-5300K)

Typical optical characteristics curves 典型光学特性曲线

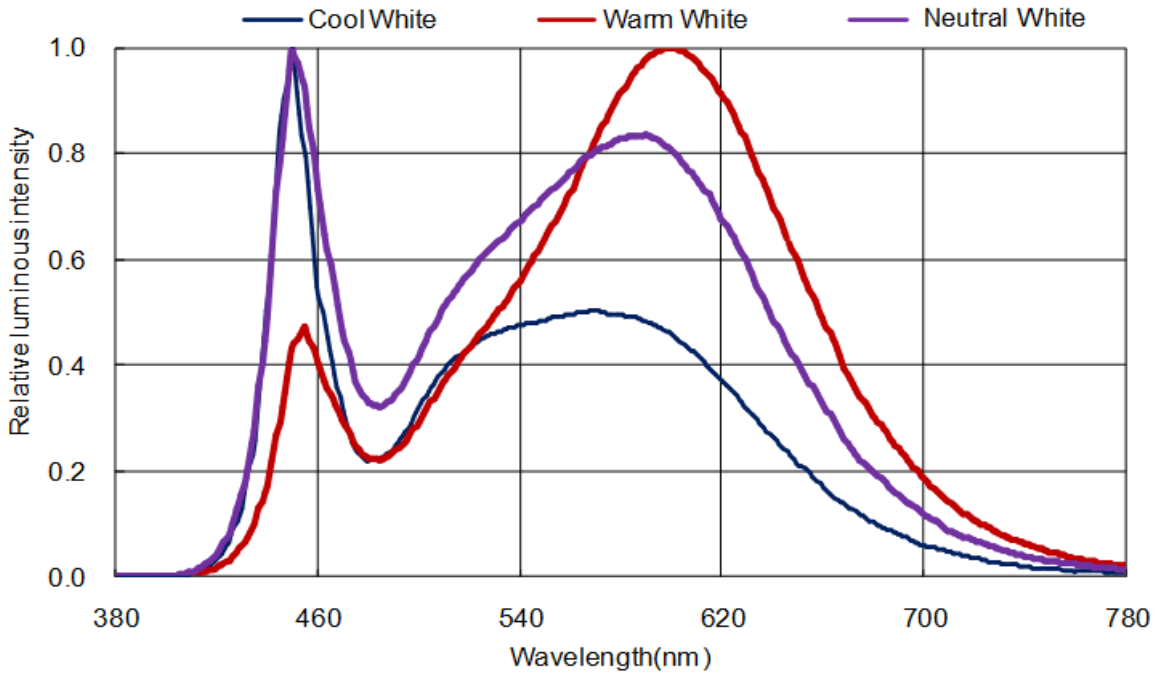

Radiation diagram 辐射图特性曲线

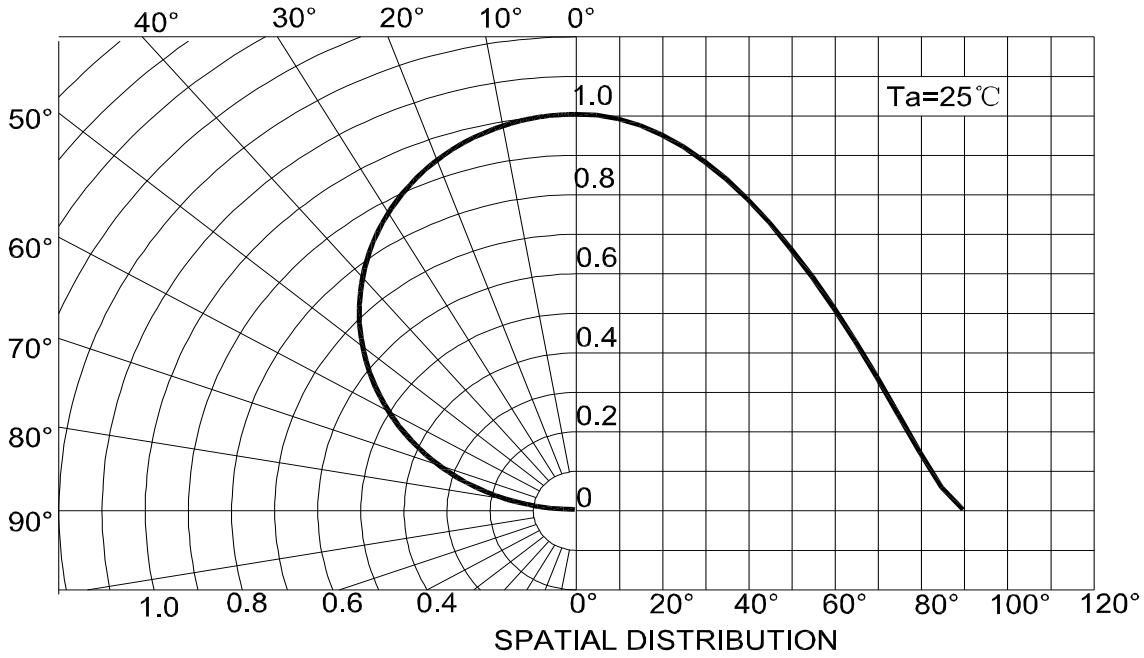

HL-EMC-3030D93W-2C-S1-HR3-Y-P6(4750K-5300K)

Bin Range of Chromaticity Coordinate Bin区分类及色坐标范围

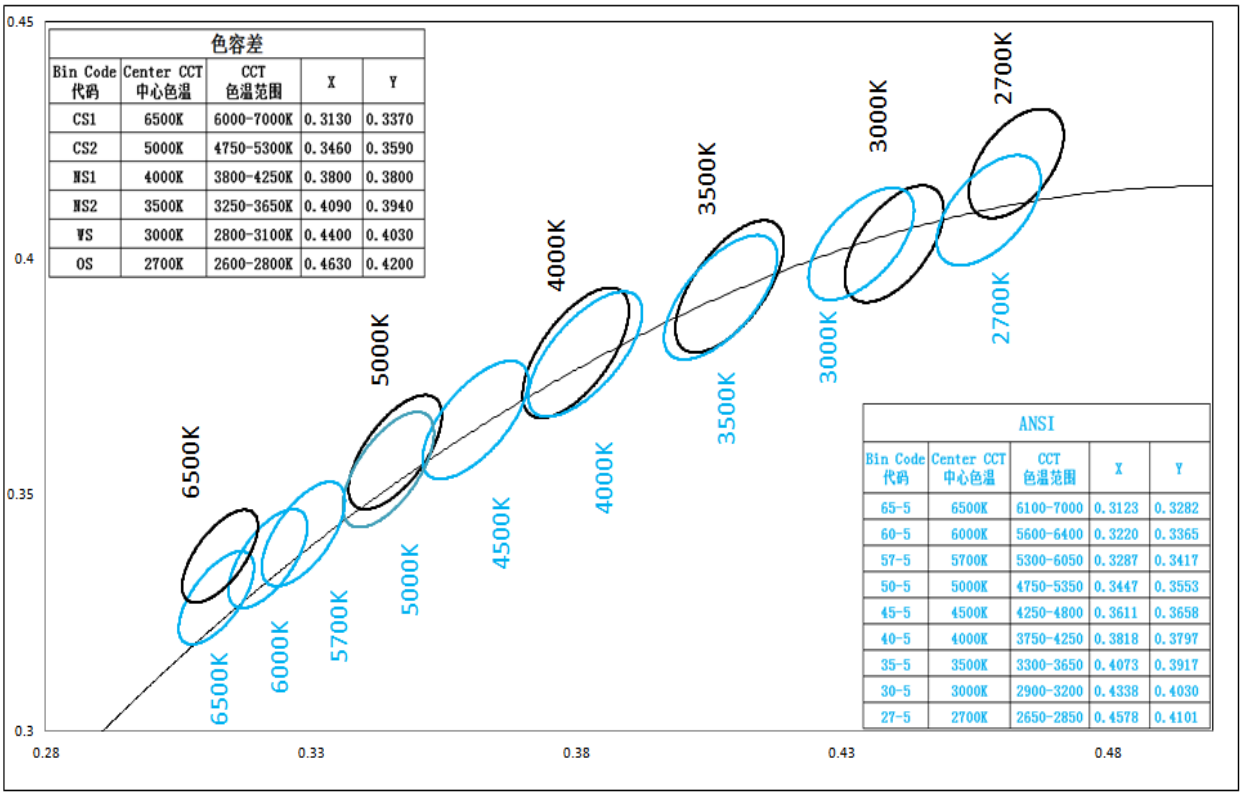

Bin Range of Chromaticity Coordinate Bin区分类及色坐标范围

分光方式	Bin Code Bin 代码	Center CCT 中心色温	CIE_x	CIE_y	A	B	⊙
色容差	CS1	6500K	0.313	0.337	0.01115	0.00475	58.23°
	CS2	5000K	0.346	0.359	0.0137	0.0059	59.37°
	NS1	4000K	0.38	0.38	0.01565	0.0067	54.00°
	NS2	3500K	0.409	0.394	0.01585	0.00695	52.58°
	WS	3000K	0.44	0.403	0.0139	0.0068	53.10°
	OS	2700K	0.463	0.42	0.0129	0.00685	53.17°
ANSI	65-5	6500K	0.3123	0.3282	0.01115	0.00475	58.57°
	60-5	6000K	0.322	0.3365	0.01179	0.00504	59.21°
	57-5	5700K	0.3287	0.3417	0.01243	0.00533	59.09°
	50-5	5000K	0.3447	0.3553	0.0137	0.0059	59.62°
	45-5	4500K	0.3611	0.3658	0.01468	0.0063	54.35°
	40-5	4000K	0.3818	0.3797	0.01565	0.0067	53.72°
	35-5	3500K	0.4073	0.3917	0.01545	0.0069	54°
	30-5	3000K	0.4338	0.403	0.0139	0.0068	53.22°
	27-5	2700K	0.4578	0.4101	0.0135	0.007	53.7°

HL-EMC-3030D93W-2C-S1-HR3-Y-P6(4750K-5300K)

Reliability Test Items And Conditions 信赖性测试项目及条件

Test Items 项目	Ref. Standard 参考标准	Test Condition 测试条件	Time 时间	Quantity 数量	Ac/Re 接收/拒收
Reflow 回流焊	JESD22-B106	Temp:260℃max T=10 sec	3 times.	22Pcs.	0/1
Thermal Shock 冷热冲击	JESD22-A104	-45-125℃ 15min/10s/15min	100 Cycles	22Pcs.	0/1
High Temperature Storage 高温保存	JESD22-A103	Temp:100℃±5℃	1000Hrs.	11Pcs.	0/1
Low Temperature Storage 低温保存	JESD22-A119	Temp:-40℃±5℃	1000Hrs.	11Pcs.	0/1
High Temperature Life Test 高温通电	JESD22-A108	Ta=105℃±5℃ IF=350mA	1000Hrs.	11Pcs.	0/1
High Temperature High Humidity Life Test 高温高湿通电	JESD22-A101	85℃±5℃/ 85%RH IF=350mA	1000Hrs.	11Pcs.	0/1

Failure Criteria 失效判定标准

Test Items 项目	Symbol 符号	Test Condition 测试条件	Failure Criteria 判定标准	
			Min. 最小	Max. 最大
Forward Voltage 正向电压	VF	IF=350mA	- -	U.S.L*)x1.1
Reverse Current 反向电流	IR	VR = 10V	- -	10uA
Luminous Flux 光通量	Lm	IF=350mA	L.S.L*)x0.7	- -

U.S.L: Upper Specification Limit 规格上限　　L.S.L: Lower Specification Limit 规格下限

*The technical information shown in the data sheets is limited to the typical characteristics and circuit examples of the referenced products. It does not constitute the warranting of industrial property nor the granting of any license.

数据工作表中所示的技术信息仅限于典型特征和电路实例引用的产品.它既不构成工业特性的保证,也不构成任何许可的授权.

HL-EMC-3030D93W-2C-S1-HR3-Y-P6(4750K-5300K)

SMT Reflow Soldering Instructions SMT回流焊说明

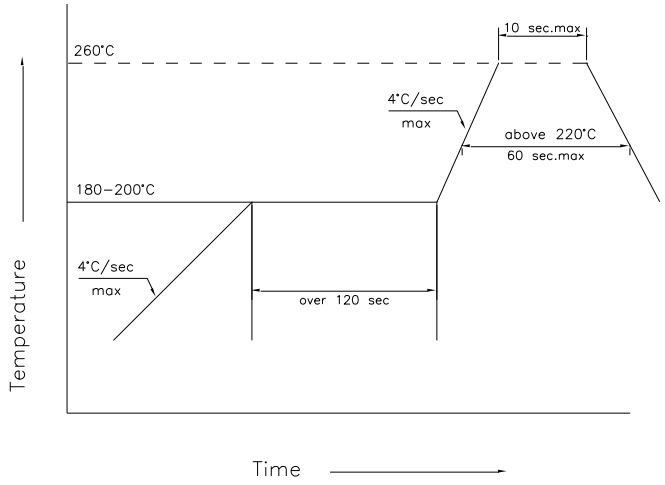

1.Reflow soldering should not be done more than three times. 回流焊不可以做三次以上。
2.When soldering , do not put stress on the LEDs during heating
当焊接时，不要在材料受热时用力压胶体表面。

Soldering iron 烙铁焊接

1.When hand soldering, keep the temperature of iron below less 350℃ less than 5 seconds
当手工焊接时，烙铁的温度必须小于350℃，时间不可超过5秒。
2.The hand solder should be done only one times
手工焊接只可焊接一次。

Repairing 修补

Repair should not be done after the LEDs have been soldered. When repairing is unavoidable, a double-head soldering iron should be used (as below figure). It should be confirmed in advance whether the characteristics of LEDs will or will not be damaged by repairing.
LED回流焊后不应该修复，当修复是不可避免时，必须使用双头烙铁（如下图），但必须事先确认此种方式会或不会损坏LED本身的特性。

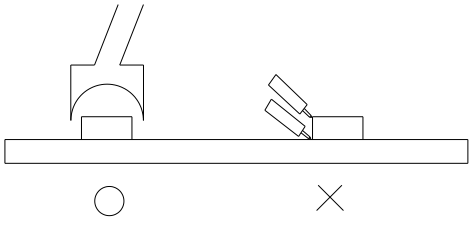

Cautions 注意事项

The encapsulated material of the LEDs is silicone. Therefore the LEDs have a soft surface on the top of package. The pressure to the top surface will be influence to the reliability of the LEDs. Precautions should be taken to avoid the strong pressure on the encapsulated part. So when use the picking up nozzle, the pressure on the silicone resin should be proper.
LED封装为硅胶，故LED胶体表面较软，用力按压胶体表面会影响LED可靠性，因此应有预防措施避免在封装的零件上的强大压力，当使用吸嘴时，胶体表面的压力应是恰当的。

HL-EMC-3030D93W-2C-S1-HR3-Y-P6(4750K-5300K)

Handling Precautions 处理防备措施

Compare to epoxy encapsulant that is hard and brittle, silicone is softer and flexible. Although its characteristic significantly reduces thermal stress, it is more prone to damage by external mechanical force . As a result, Special handling precautions must be observed during assembling using silicone encapsulated LED products, Failure to comply might leads to damage and premature failure of the LED.

相对环氧树脂较脆较硬而言，硅胶封装较柔软且有弹性，虽然它的特性大大减少了热应力，但易受机械外力损坏，因此在手工处理方面须要对硅胶封装材料做预防措施，若未按要求操作，可能会导致LED损坏和光衰。

1.Handle the component along the side surface by using forceps or appropriate tools; do not directly touch or Handle the silicone lens surface, it may damage the internal circuitry.

通过使用适当的工具从材料侧面夹取，不可直接用手或尖锐金属压胶体表面，它可能会损坏内部电路。

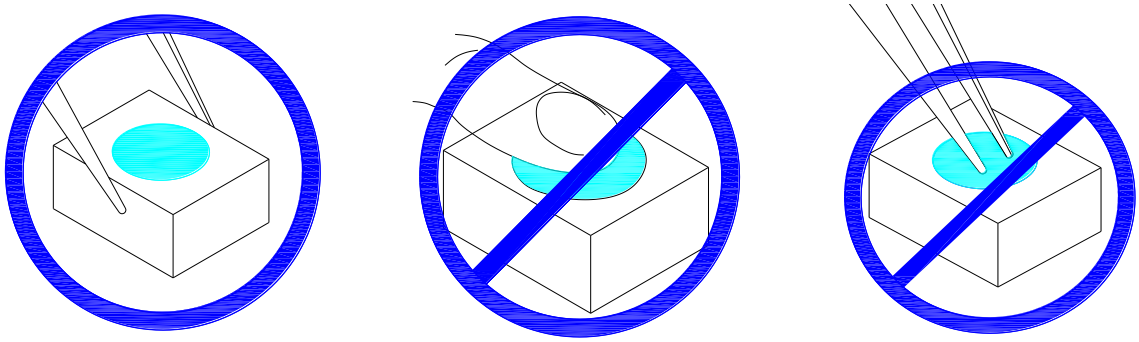

2.The outer diameter of the SMD pickup nozzle should not exceed the size of the LED to prevent air leaks. The inner diameter of the nozzle should be as large as possible. A pliable material is suggested for the nozzle tip to avoid scratching or damaging the LED surface during pickup. The dimensions of the component must be accurately programmed in the pick-and-place machine to insure precise pickup and avoid damage during production.

为防止气压泄漏，SMD吸咀外径不可以超过LED尺寸，吸咀内径尺寸应尽可能大，吸咀顶端材质建议采用柔软材料以防在吸取期间刮伤或损坏LED胶体表面，元件的尺寸必须在取放机里准确的编程好，以确保精确的吸取和避免生产过程中的损害。

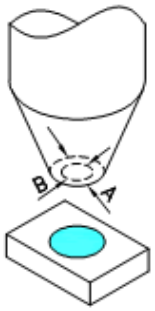

3.Do not stack together assembled PCBs containing LEDs. Impact may scratch the silicone lens or damage the internal circuitry

不可将模组材料堆积在一起，它可能会损坏内部电路。

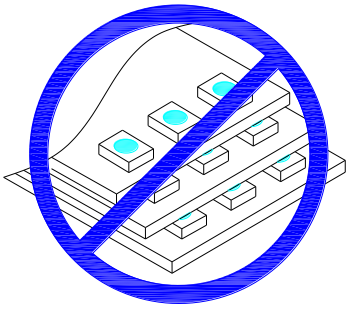

4.Not suitable to operate in acidic environment, PH<7

不可用在PH<7的酸性场所。



5.LED operating environment and sulfur element composition cannot be over 100PPM in the LED mating usage material.

LED工作环境及与LED适配的材料中硫元素及化合物成份不可超过100PPM。

6.When we need to use external glue for LED application products, please make sure that the external glue matches the LED packaging glue. Additionally ,as most of LED packaging glue is silica gel, and it has strong Oxygen permeability as well as strong moisture permeability; in order to prevent external material from getting into the inside of LED, which may cause the malfunction of LED, the single content of Bromine element is required to be less than 900PPM,the single content of Chlorine element is required to be less than 900PPM,the total content of Bromine element and Chlorine element in the external glue of the application products is required to be less than 1500PPM

当我们需要使用外封胶涂抹LED产品时，应确保外封胶与LED封装胶水相匹配，因为大多数LED的封装胶水为硅胶，它有较强的氧化性和较强的吸湿性，必须防止外封材质进入LED内部以造成LED的损伤，单一的溴元素含量要求小于900PPM，单一氯元素含量要求小于900PPM，在涂抹LED产品时要求外封胶溴元素与氯元素总含量必须小于1500PPM。

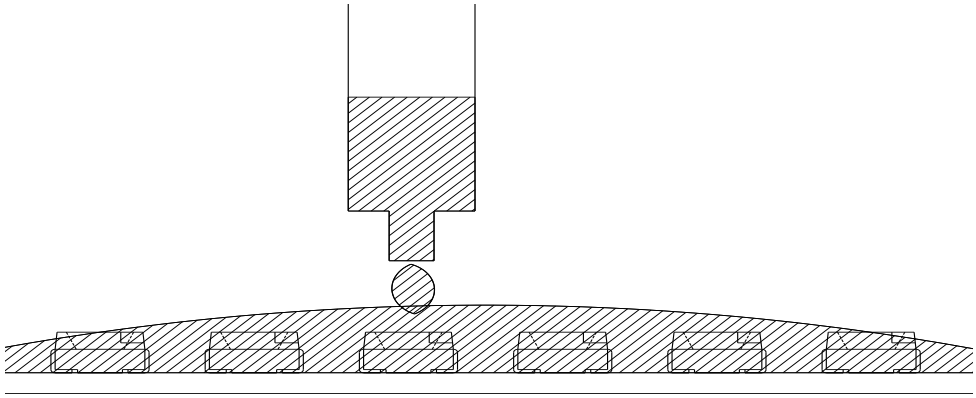

7.Other points for attention, please refer to our LED user manual，In accordance with the user manual, the product shelf life is 24 months，If there is a warranty agreement, the warranty agreement shall prevail

其它注意事项请参照我们的LED使用手册，符合使用手册的情况下，产品保质期为24个月，已签订保质协议的则以保质协议为准

HL-EMC-3030D93W-2C-S1-HR3-Y-P6(4750K-5300K)

Label 标签

PartNo: Part number 型号
ΦV: Luminous intensity rank 亮度等级
VF: Forward voltage rank 电压等级
X/Y: Coordinate rank 色坐标
TC: Color temperature 色温
LotNo: Lot number 批号



Tape Specifications (Units : mm) 载带规格（单位：mm）

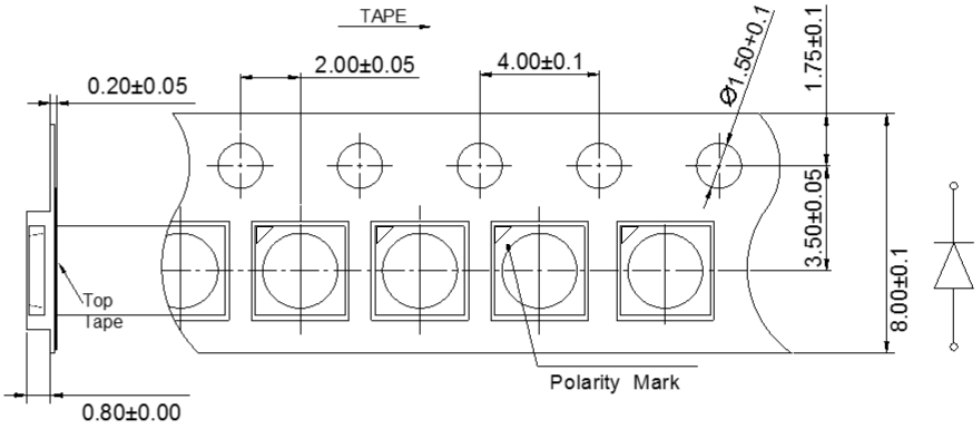

Reel Dimensions
卷轴尺寸

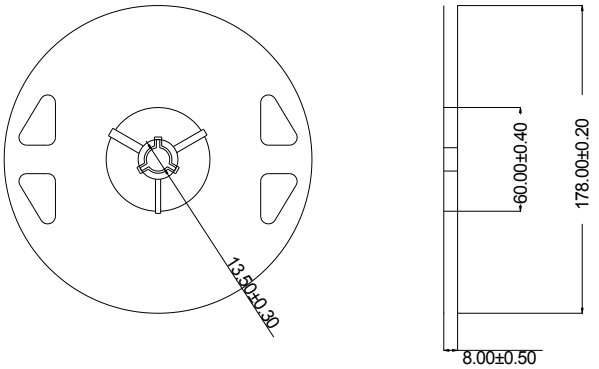

Moisture Resistant Packaging 防潮带包装

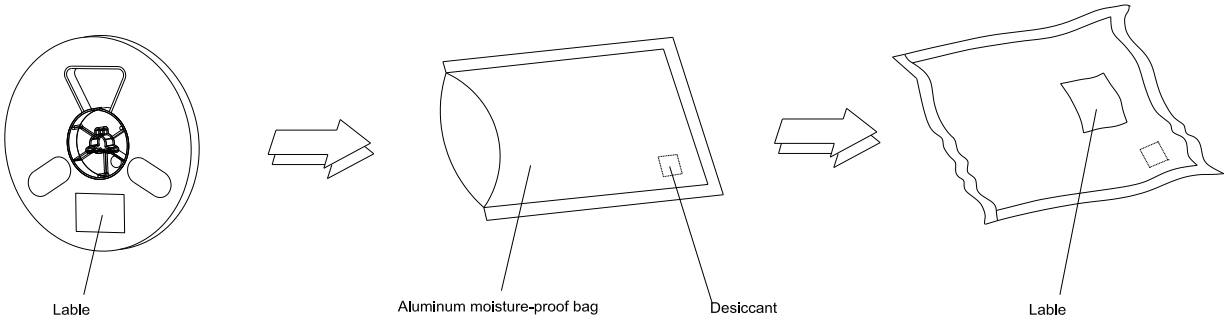

Note: The tolerances unless mentioned is ±0.1mm , Unit: mm 注：标注公差为±0.1mm ，单位：mm

修订次数	修订人	修订内容	修订日期	版次
1	刘萍萍	新建文件	2025.1.17	A/0
2				
3				
4				
5				
6				
7				
8				
9				
10				
11				
12				
13				
14				
15				
16				
17				
18				
19				
20				
21				
22				
23				
24				
25				
26				