DATA SHEET

SUNGMUN CODE : MSDN-04H(LG)

DESCRIPTION : **ROTARY DIP SWITCH**

SUNGMUN ELECTRONICS CO., LTD.

Address 301-302,Bucheon Technopark 345, Seokcheon-ro, Ojeong-gu
Bucheon-si, Gyeonggi-do, Korea
TEL. +82-32-328-1941~4
FAX +82-32-328-1945
E-mail sungmun@sungmun.co.kr
Website www.sungmun.com

SUNGMUN
ELECTRONICS

REV NO.	DATE	REVISION	DR	CH	APP
⚠1					

SPECIFICATION

1. Rating : 100mA, DC 42V (Switching)
   400mA, DC 42V (None-Switching)
2. Contact Resistance : 80mΩ Max
3. Insulation Resistance : 100MΩ Min
4. Operating Force : 120±30gf Max
5. Life cycle : 25,000 steps
6. Sealing : IP67 (Dust & Water proof)
7. Packing : 65pcs Tube

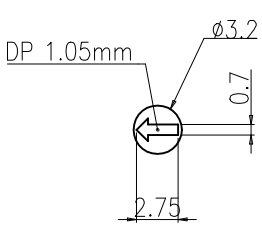

ACTUATOR

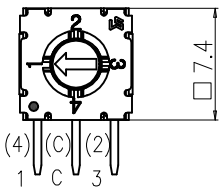

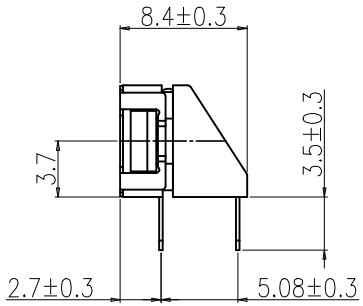

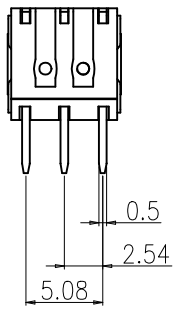

Decimal Code

04 Position	C	1	2	3	4	
1	●	●				1
2	●		●			2
3	●			●		3
4	●				●	4

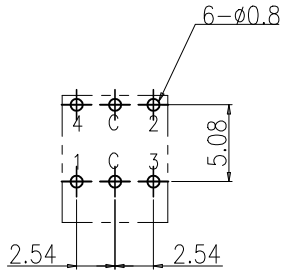

P.C.B DIMENSION (Top View)

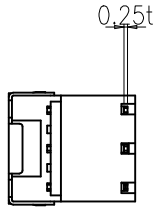

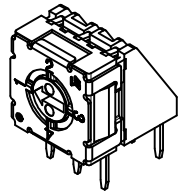

DRAW/DESIGNED	CHECKED	APPROVED		G.TOL	TITLE	ROTARY DIP SWITCH	
K.N KIM	K.N KIM	W.J LEE		--			
			UNIT	SCALE	MODEL NO.	MSDN-04H(LG)	REV.
Din ISO-2768-1m			mm	N:S			
2026-03-25	2026-03-25	2026-03-25		SIZE	DRAW NO.	MSDN-04H(LG)-01	01
SUNGMUN ELECTRONICS CO.,LTD				A4			

Ranges	0.5~3	3~6	6~30	30~120	120~400
Tolerance	±0.1	±0.1	±0.2	±0.3	±0.5

본 도면은 당사 재산으로서 허가없이 무단복사/배포 금지함. PROPERTY OF ISSUING ENTITY. CANNOT BE DISTRIBUTED OR REPRODUCED WITHOUT AUTHORIZATION.

1. Style:

This specification describes "7.4X7.4 size of Mini Rotary Dip Switch" which is M series.

1.1 Operating / Storage Temperature Range : -60℃ ~ +125℃

2. Rating:

2.1 None-Switching : 400 mA, DC 42V

2.2 Switching : 100 mA, DC 42V

3. Type of Actuation : Rotating

4. Electrical Characteristics

ITEM	DESCRIPTION	TEST CONDITIONS	REQUIREMENTS
4-1	Visual Examination	By visual examination check without any out pressure & testing.	There shall be no defects that affect the serviceability of the product.
4-2	Contact Resistance	① To be measured between the two terminals associated with each switch pole. ② Measurements shall be made with a 1kHz shall current contact resistance meter.	80mΩ max. (initial)
4-3	Insulation Resistance	250V DC	100 ㏁ min.
4-4	Dielectric withstanding Voltage	250V AC(50Hz or 60Hz)shall be applied between all the adjacent terminal and between the terminal and the frame for 1 minute.	There shall be no breakdown or flashover.

5. Mechanical Characteristics

ITEM	DESCRIPTION	TEST CONDITIONS	REQUIREMENTS
5-1	Operation Force	Operating direction shall be clockwise or counter clockwise direction	250gf•cm max
5-2	Operation Life	Measurements shall be made following the test set forth below: 1)Rate of operation: 15~20 cycles/ minute 2)Step of operation: 25,000 steps	1)As shown in item 4-3,4-4 2)Contact Resistance: 200mΩ max 3)Final-after test

6. Environmental Characteristics

ITEM	DESCRIPTION	TEST CONDITIONS	REQUIREMENTS
6-1	Resistance Low Temperature	Following the test set forth below the sample shall be left in normal temperature and humidity conditions for an hour before measurements are made: 1)Temperature: -60℃ ±3℃ 2)Time: 96 hours	1)As shown in item 4-3, 4-4, 5-1 2)Contact Resistance: 200mΩ max
6-2	Resistance High Temperature	Following the test set forth below the sample shall be left in normal temperature and humidity conditions for an hour before measurements are made: 1)Temperature: 125℃ ±2℃ 2)Time: 96 hours	1)As shown in item 4-3, 4-4, 5-1 2)Contact Resistance: 200mΩ max
6-3	Resistance Humidity	Following the test set forth below the sample shall be left in normal temperature and humidity conditions for an hour before measurements are made: 1)Temperature: 40℃ ±2℃ 2)Relative humidity: 90~95% 3)Time: 96 hours	1)As shown in item 4-4, 5-1 2)Contact Resistance: 200mΩ max 3)Insulation Resistance: 10 MΩ min

7. This item is "RoHS" Compliant

8. Manual Soldering : Max 350℃, 3 sec.

9. Wave Soldering Conditions:

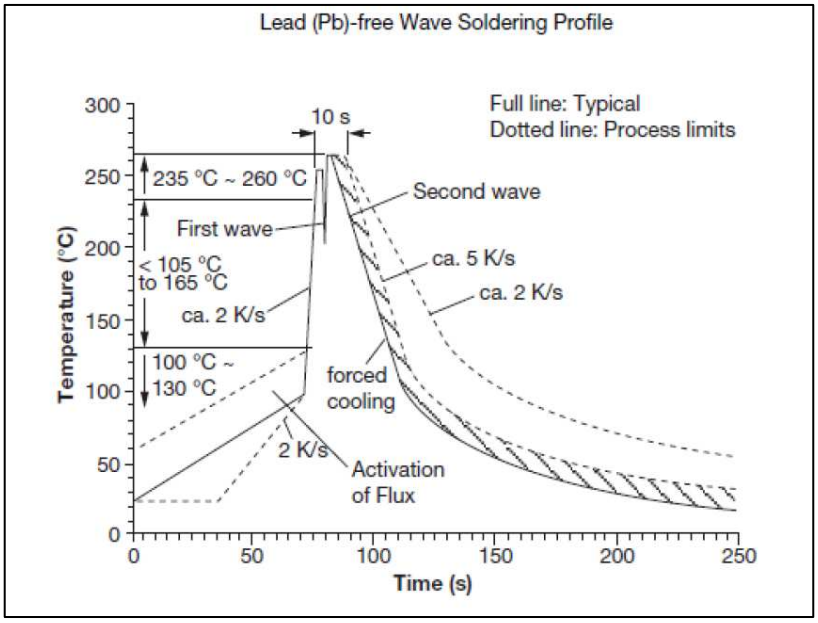

10. Reflow Soldering Conditions: (SMD type only)

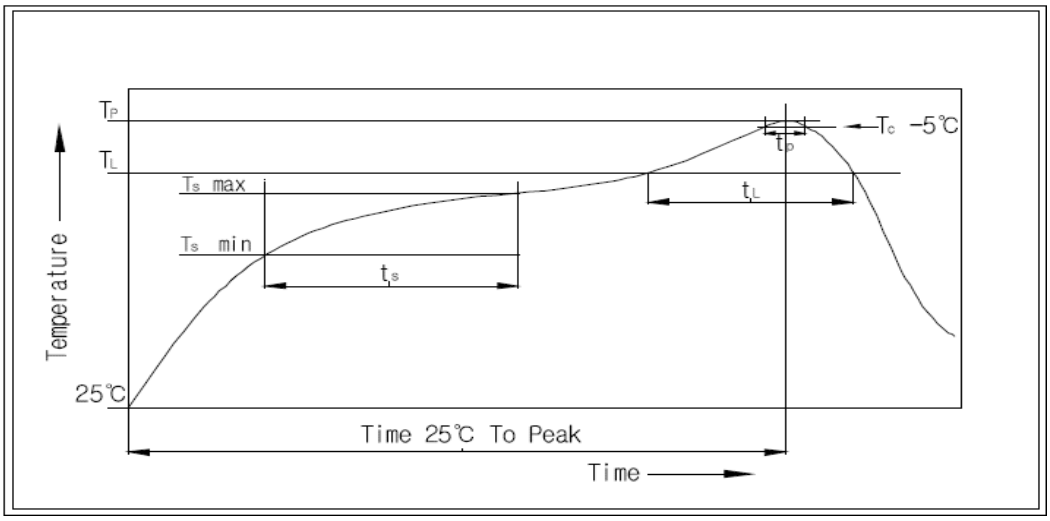

10-1 Condition for Soldering

Profile Feature	Pb-Free Assembly
Average Ramp-UP Rate(Ts max to TP)	3℃/second max
Preheat - Temperature Min(Ts min) - Temperature Max(Ts max) - Time (ts min to ts max)	 150℃ 200℃ 60-180seconds
Time maintained above: - Temperature (TL) - Time (tL)	 217℃ 60-150seconds
Peak/Classification Temperature(TP)	260℃ +0℃/ -5℃
Time within 5℃ of actual Peak Temperature(TP)	Min 30 seconds
Ramp-Down Rate	6℃/sec max
Time 25℃ to Peak Temperature	8 minutes max